b. AAR Shelter. The AAR shelter contains all the equipment of the AAR operating group and the associated plan position indicator (PPI).

23 (C). Trailer Mounted Directed Station

The trailer mounted director station (fig. 14) contains the computer equipment, recording equipment, tactical control circuits, and voice communication equipment required for the operation of the tactical control system and the acquisition radar systems. Major units located within the trailer mounted director station are described in *a* through *g* below.

a. Director Station Group. The director station group (10, fig. 14) is located against the curbside wall of the trailer mounted director station. The director station group contains the primary power controls for the trailer lighting, heating, and ventilating equipment, and for the LOPAR system equipment.

b. Recorder Group. The recorder group (9) is located against the curbside wall of the trailer mounted director station. The recorder group contains recording equipment and voice communication equipment. The recording equipment provides an automatic film record of equipment performance during a test or tactical engagement. The voice communication equipments consists of a switchboard and related equipment which provide two-way communication between all system telephone locations.

c. Battery Control Console. The battery control console (8) is located against the curbside wall of the trailer mounted director station. The battery control console contains controls, presentation indicators, automatic plotting boards, and other equipment associated with the acquisition radar systems (LOPAR and HIPAR/AAR), the computer system, and the tactical control system. Data used by the battery control officer during an engagement is displayed on the horizontal plotting board (1, fig. 15), altitude plotting board (2), PPI (3), and precision indicator (4). The displays on the plotting boards and indicators are described in (1) through (4) below.

(1) *Horizontal plotting board.*

Note. The plotting display of figure 16 is described in (*a*) through (*c*) below.

(*a*) The horizontal plotting board (1, fig. 15) provides means for automatically plotting in range and azimuth a plan view of an entire engagement. A typical engagement plot by the horizontal plotting board is shown in figure 16. The plotting display is inked on paper and contains three plots in the horizontal plane: a plot showing position of

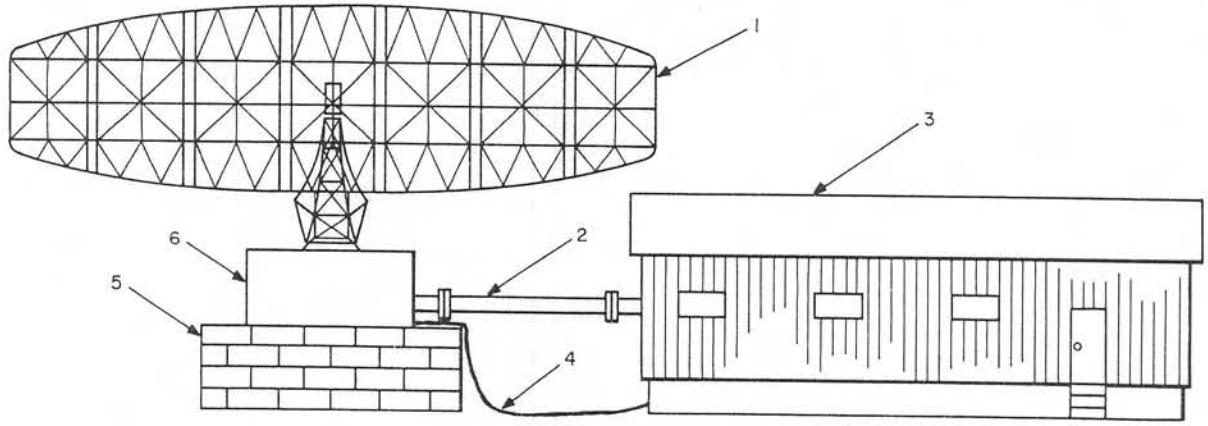

1—Antenna
2—Waveguide section
3—AAR shelter
4—Power cable
5—Concrete base
6—Antenna pedestal

Figure 11.2 (U). Auxiliary acquisition radar (U).

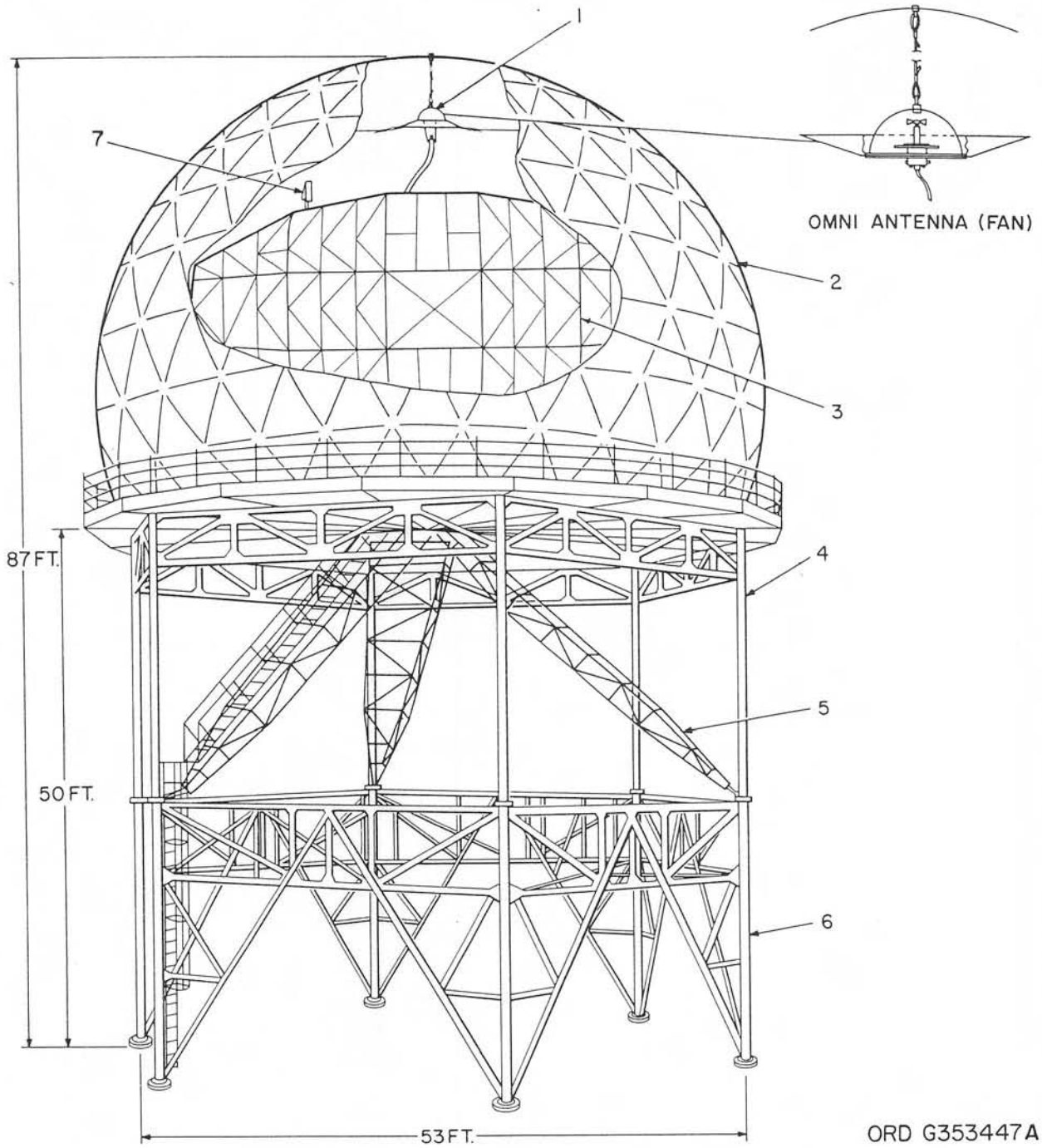

1—Omni antenna (CSC²) or (FAN)
2—Radome
3—HIPAR antenna (CSC²) or (FAN)
4—Radome support
5—Antenna tripod
6—Radome support extension
7—Auxiliary antenna (2)

Figure 12 (U). HIPAR antenna radome-support-tripod for HIPAR antenna (FAN) or (CSC²) (U).

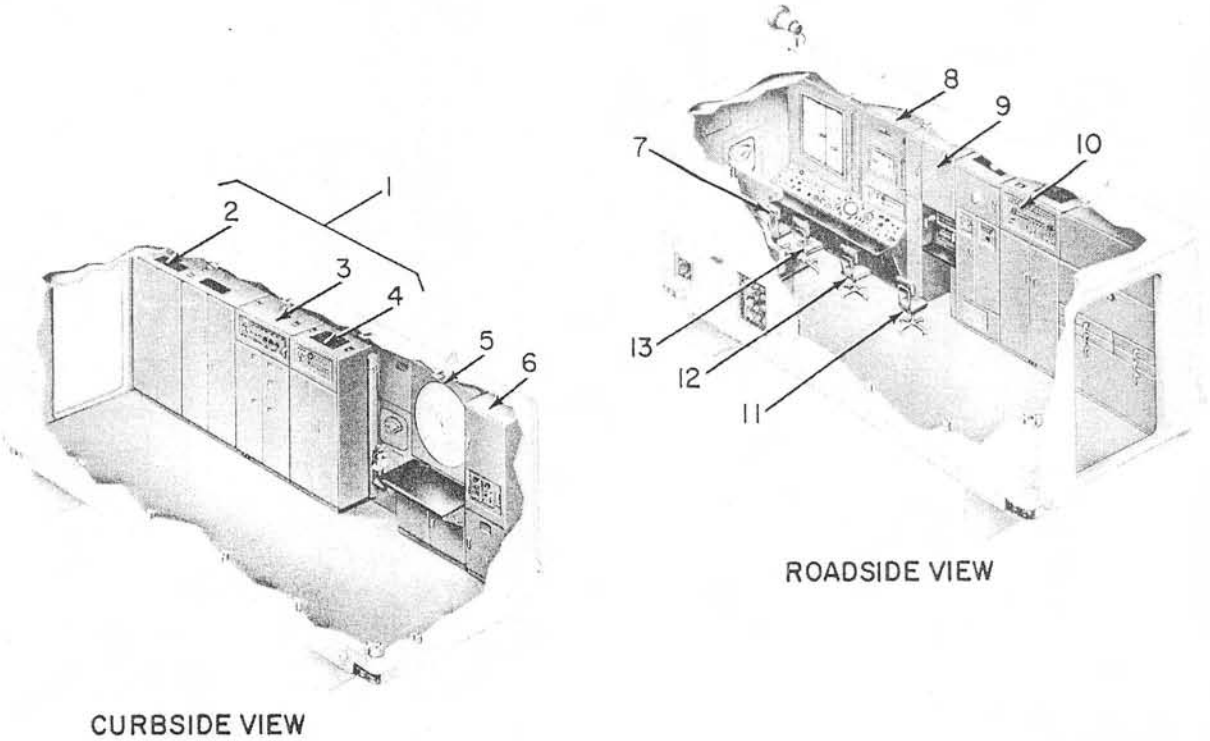

1—Computer group
2—Computer amplifier relay group
3—Servo computer assembly
4—Computer power supply group
5—Early warning plotting board
6—Auxiliary acquisition control interconnecting group
7—Acquisition radar operator's position
8—Battery control console
9—Recorder group
10—Director station group
11—Switchboard operator's position
12—Computer operator's position
13—Battery control officer's position

Figure 14 (U). Trailer mounted director station—cutaway views (U).

the target (point B to point C), a plot showing the predicted intercept point (point A to the fire mark at point E), and a plot showing present position of the missile (point D to point C). The center of the plotting board represents the position of the target track antenna-receiver-transmitter group. Range is represented by concentric circles marking 10,000-yard increments from the center of the plotting board. Azimuth is represented by radial lines that divide the plotting board into 200-mil sectors. Timing marks appear on each plot at about 10-second intervals. TARGET–MISSILE plot indicators at the lower left and right corners of the plotting board indicate which pen is plotting the target position and which pen is plotting the missile position.

(*b*) Before the missile is fired, the horizontal plotting board continuously plots the position of the target (point B to the fire mark at point A) and the position of the predicted intercept point (point A to point E). Location of the predicted point at any instant is based on the assumption of immediate fire.

(*c*) The fire order is transmitted, in this typical engagement plot, when the target is at a range of approximately 135,000 yards and the predicted intercept point is at a range of ap-

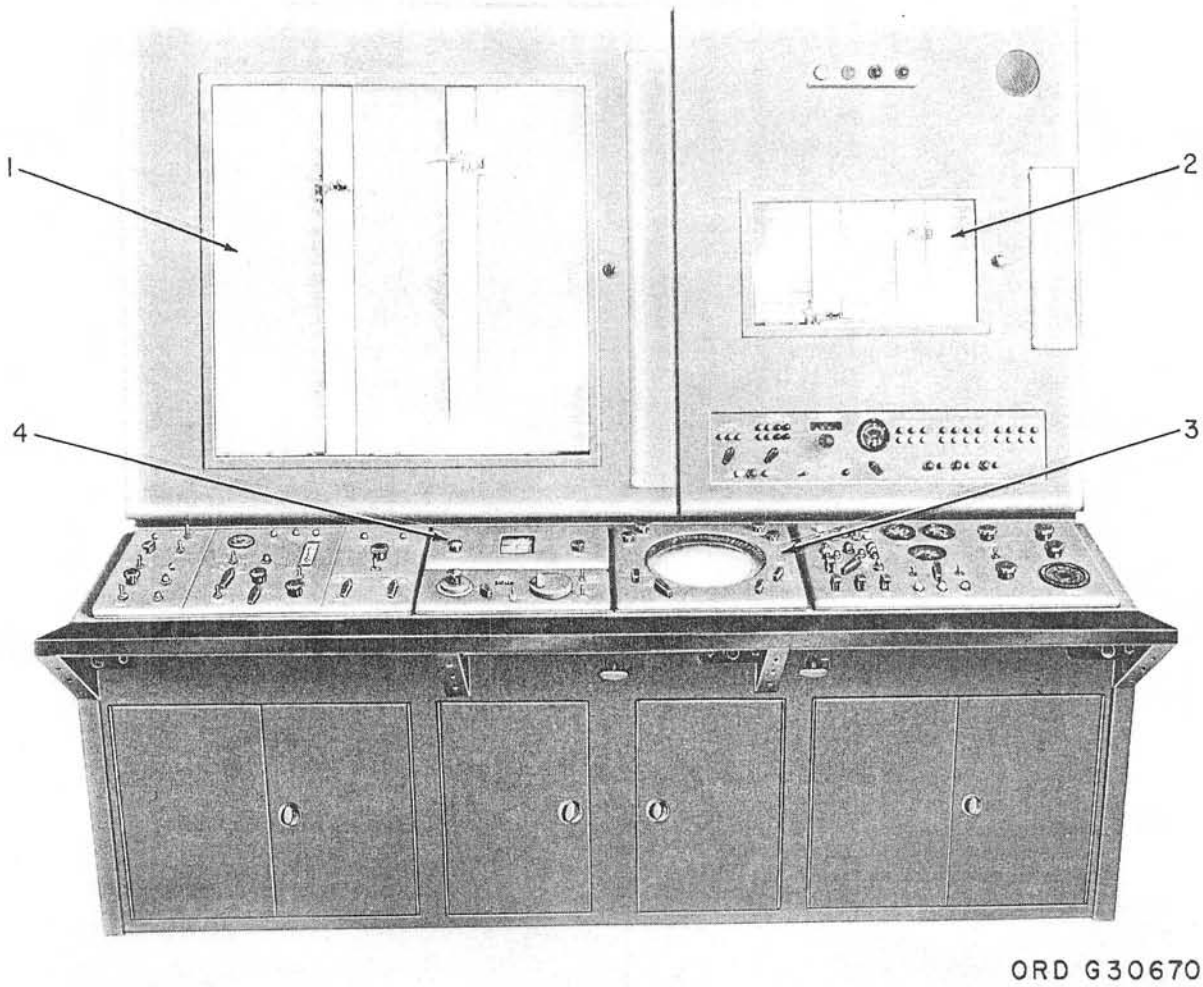

1—Horizontal plotting board
2—Altitude plotting board
3—PPI
4—Precision indicator

Figure 15 (C). Battery control console (U).

proximately 95,000 yards. Shortly after the fire order is transmitted, the pen plotting the predicted intercept point returns to approximately the center of the plotting board (point D) and begins to plot the position of the missile in the horizontal plane. The target and missile plots continue until target intercept occurs at the intersection of the two plots (point C).

(2) *Altitude plotting board.*

Note. The plotting display of figure 17 is described in (*a*) through (*c*) below.

(*a*) The altitude plotting board (2, fig. 15) provides means for automatically plotting target and missile altitude data against time to intercept data. A typical engagement plot by the altitude plotting board is shown in figure 17. The plotting display is inked on paper and contains three plots in the vertical plane: a plot of the altitude of the predicted intercept point by the right plotting pen before fire (point C to the fire mark), a plot of the altitude of the target by the right plotting pen after fire (fire mark to point B), and a plot

of the altitude of the missile by the left plotting pen after fire (point E to point A). Both plotting pens also simultaneously plot the time to intercept along the horizontal axis. The time scale for both plotting pens starts at zero and extends for about 200 seconds. The height scale extends from —5000 feet to 100,000 feet. Timing marks appear on each plot at about 10-second intervals. A fire mark (fig. 17) is made on the target altitude plotting board when the missile is fired.

(*b*) When the target enters the defense area (point C), in this typical engagement plot, the altitude of the predicted intercept point is about 53,000 feet. The plot of the predicted intercept point continues until the time to intercept decreases to about 125 seconds. At this time, the fire order is transmitted as indicated by the fire mark on the plot. Shortly afterwards, the right plotting pen begins to plot present target altitude against time to intercept. As the time to intercept decreases, the two plots move closer together. At zero time to intercept, or at burst time, the missile and target altitudes are coincident (points A and B).

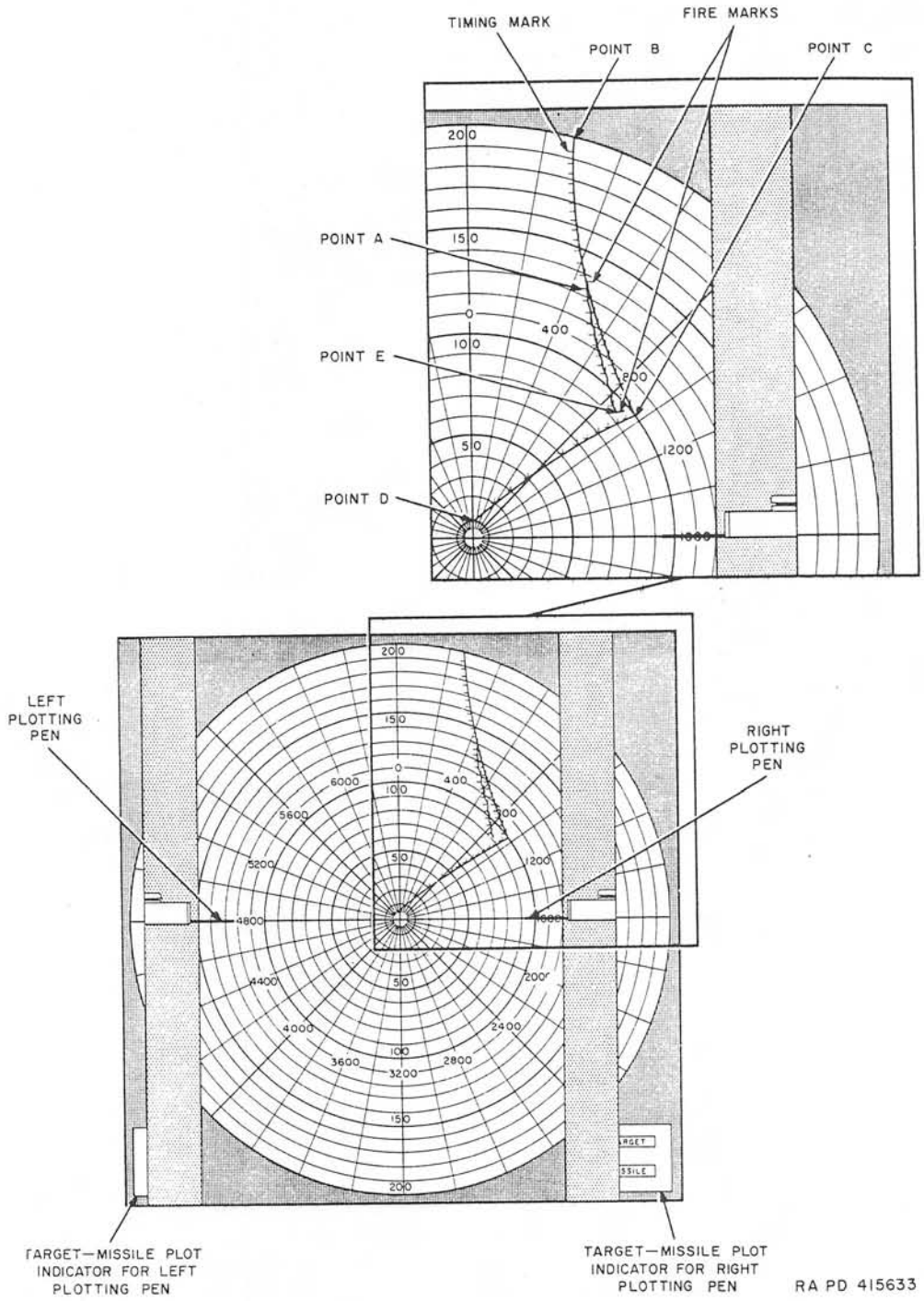

Figure 16 (CMHA). Horizontal plotting board — typical engagement plot.

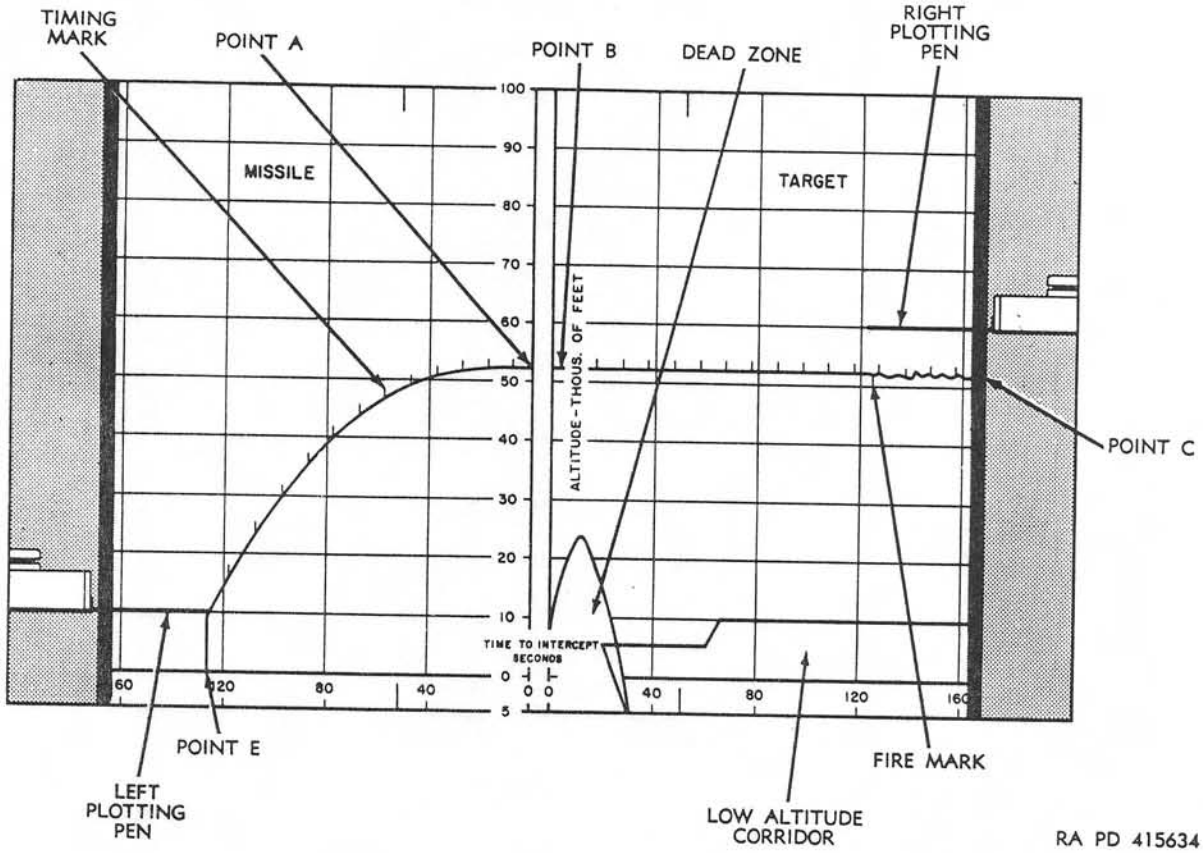

Figure 17 (CMHA). Altitude plotting board — typical engagement plot.

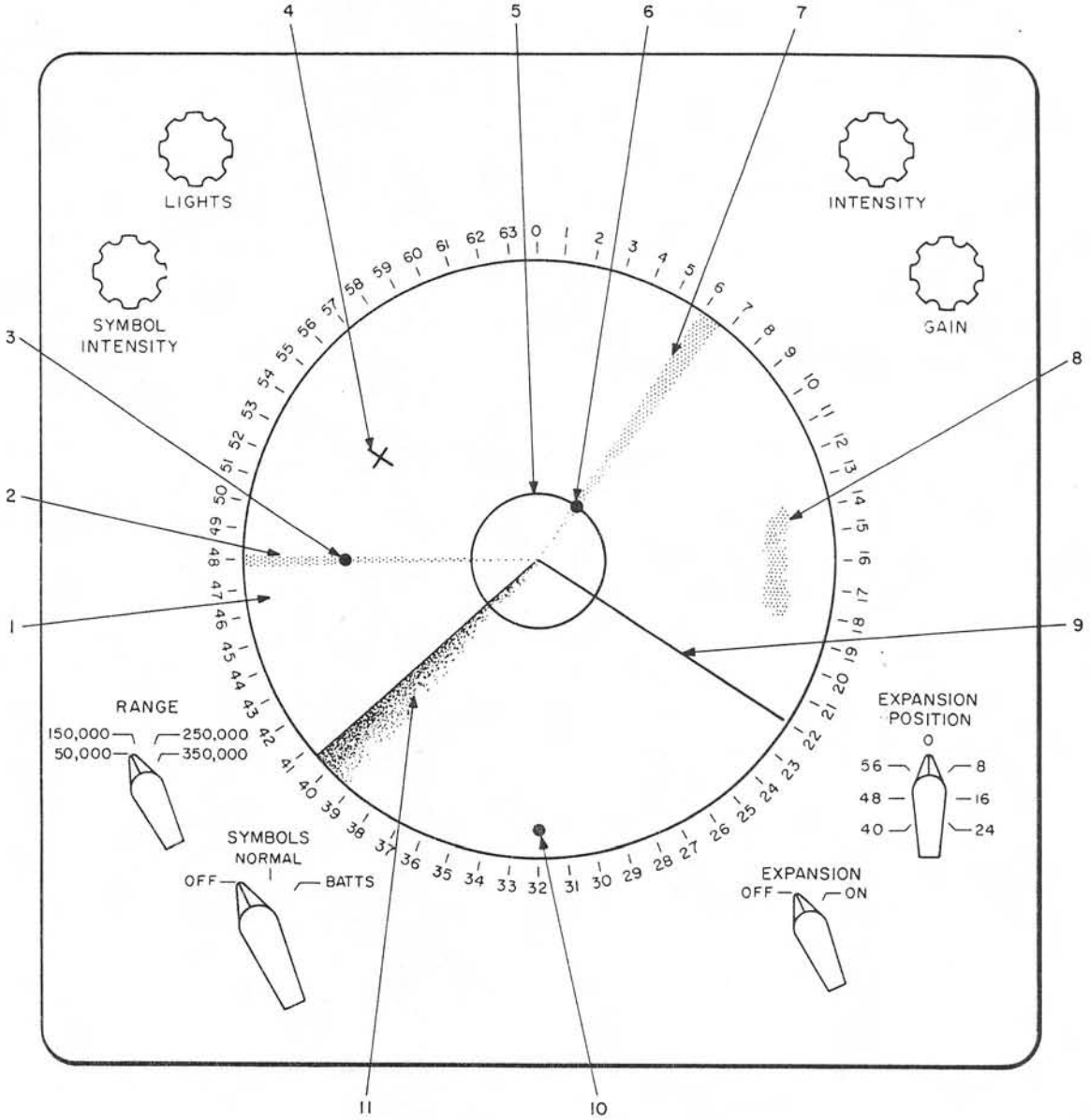

ORD G258222

1—Cathode-ray tube
2—Jam strobe No. 1
3—Jamming target No. 1 video
4—Electronic cross
5—Acquisition range circle
6—Jamming target No. 2 video
7—Jam strobe No. 2
8—Ground clutter video
9—Acquisition (flashing) azimuth line
10—Non-jamming target video
11—Rotating radial sweep

Figure 18 (C). PPI—basic presentation (U).

(*c*) The dead zone is an area in which an intercept cannot be made in the normal surface-to-air mission.

(3) *PPI.* The plan position indicator (PPI) (3, fig. 15) provides a visual means of detecting, observing, identifying, and designating return signals from moving objects and targets within range of the acquisition radar systems. Symbols appearing on the PPI display used by the operator to effect a successful mission are described in (*a*) and (*b*) below.

Note. The key numbers shown in parentheses in (*a*) below refer to figure 18.

(*a*) The basic presentation of the PPI is shown in figure 18 and described in *1* through *6* below. This presentation consists of the rotating radial sweep (11), acquisition range circle (5), electronic cross (4), acquisition (flashing) azimuth line (9), target return video signals (3, 6, 8, and 10), and jam strobes (2 and 7).

1. The rotating radial sweep (11) extends from the center to the outer edge of the face of the PPI. The radial sweep rotates clockwise around the face of the PPI in synchronism with the rotation of the selected acquisition radar antenna (HIPAR/AAR or LOPAR). The complete display is presented on the PPI once for each 360-degree rotation of the radial sweep.

2. The electronic cross (4) is illuminated on the face of the PPI once during each rotation of the rotating radial sweep (11). The two lines forming the electronic cross represent the azimuth and range settings of the target tracking radar system. When the electronic cross is centered on the designated target, the electronic cross provides an indication that the target is being accurately tracked in azimuth and in range by the target tracking radar system. The operator may switch the cross in or out of the display as required. The cross is normally used for test and maintenance alinement. During tactical operation, the cross obscures the target video and is, therefore, only switched on momentarily, as required to verify target tracking.

3. The acquisition range circle (5) is traced on the face of the PPI by an acquisition range dot that rotates with the rotating radial sweep (11). The radius of the circle is adjustable through a distance representing 0 to 250,000 yards in range for the LOPAR system and 0 to 350,000 yards for the HIPAR/AAR system. When the acquisition range circle is adjusted to coincide with the target return signals, it represents the range coordinate of the target.

4. The acquisition (flashing) azimuth line (9) appears on the face of the PPI as a brightened stationary radial line once during each rotation of the rotating radial sweep (11). The acquisition (flashing) azimuth line may be steered by rotating an azimuth knob.

5. Target return video signals (3, 6, 8, and 10) are displayed on the face of the PPI when the transmitted radio frequency (RF) pulses are reflected from moving objects or targets within the range of the selected acquisition radar system (HIPAR/AAR or LOPAR). The return signals are displayed as bright dots or irregular areas with each rotation of the rotating radial sweep (11). When a return signal is identified as hostile, the acquisition range circle (5) and the acquisition (flashing) azimuth line (9) are positioned to coincide with the target return signal, automatically providing azimuth and range infor-

mation to the target tracking radar system. Information that the target has been designated is sent to the trailer mounted tracking station, enabling the operator in the tracking station to slew the target track antenna to the target.

6. The jam strobes (2 and 7) appear at the exact azimuth of each jamming target video (3 and 6). The long persistence phosphor of the scope permits numerous jam strobes to be observed simultaneously. If the target is obscured, by the strobe line, only azimuth information is transmitted to the target tracking radar system during the target designate phase of operation. During HIPAR/AAR operation, the length of the strobes may be adjusted.

(*b*) The symbols of either the fire unit integration facility (FUIF) or the battery terminal equipment (BTE) are supplied by the Army Air Defense Command Post (AADCP). The AADCP symbols along with the selective identification facility/identification friend or foe (SIF/IFF) symbols are displayed on the PPI. Detailed information on tactical symbols is contained in chapter 7.

(4) *Precision indicator.* The precision indicator (4, fig. 15) displays an expanded sector of the PPI display covering 533 mils in azimuth (width) and 25,000 yards in range (height). The expanded portion is centered at the intersection of the horizontal and vertical cross hairs etched in the face of the precision indicator. These cross hairs represent the intersection of the acquisition range circle (5, fig. 18) and the acquisition (flashing) azimuth line (9, fig. 18) on the basic PPI presentation. The expanded display provides better target resolution and permits more accurate determination of the range and azimuth of the designated target. The basic presentation of the precision indicator is shown in figure 19 and described in (*a*) through (*e*) below.

Note. The key numbers shown in parentheses in (*a*) through (*e*) below refer to figure 19 unless otherwise indicated.

(*a*) The acquisition range line (1) is represented by a black horizontal line etched in the face of the precision indicator. This line represents an expanded portion of the acquisition range circle (5, fig. 18) displayed on the PPI.

(*b*) The acquisition azimuth line (3) is represented by a black vertical line etched in the face of the precision indicator. The acquisition azimuth line represents a 25,000-yard range segment of the acquisition (flashing) azimuth line (9, fig. 18) on the PPI, 12,500 yards on each side of the acquisition range circle (5, fig. 18).

(*c*) The return signal (designated target) (2) appears as a brightened defocused spot on the face of the precision indicator each time the electronic sweep (5) travels across the face of the precision indicator. The target is centered at the intersection of the acquisition range line (1) and the acquisition azimuth line (3).

(*d*) The electronic cross (4) represents the azimuth and range settings of the target tracking radar system.

(*e*) The electronic sweep (5) is an illuminated vertical line that extends from the upper edge to the lower edge of the face of the precision indicator. The electronic sweep corresponds to the rotating radial sweep (11, fig. 18) on the PPI and travels across the face of the precision indicator from left to right in synchronism with the rotation of the selected acquisition radar antenna (HIPAR/AAR or LOPAR).

d. Auxiliary Acquisition Control Interconnecting Group. The auxiliary acquisition control

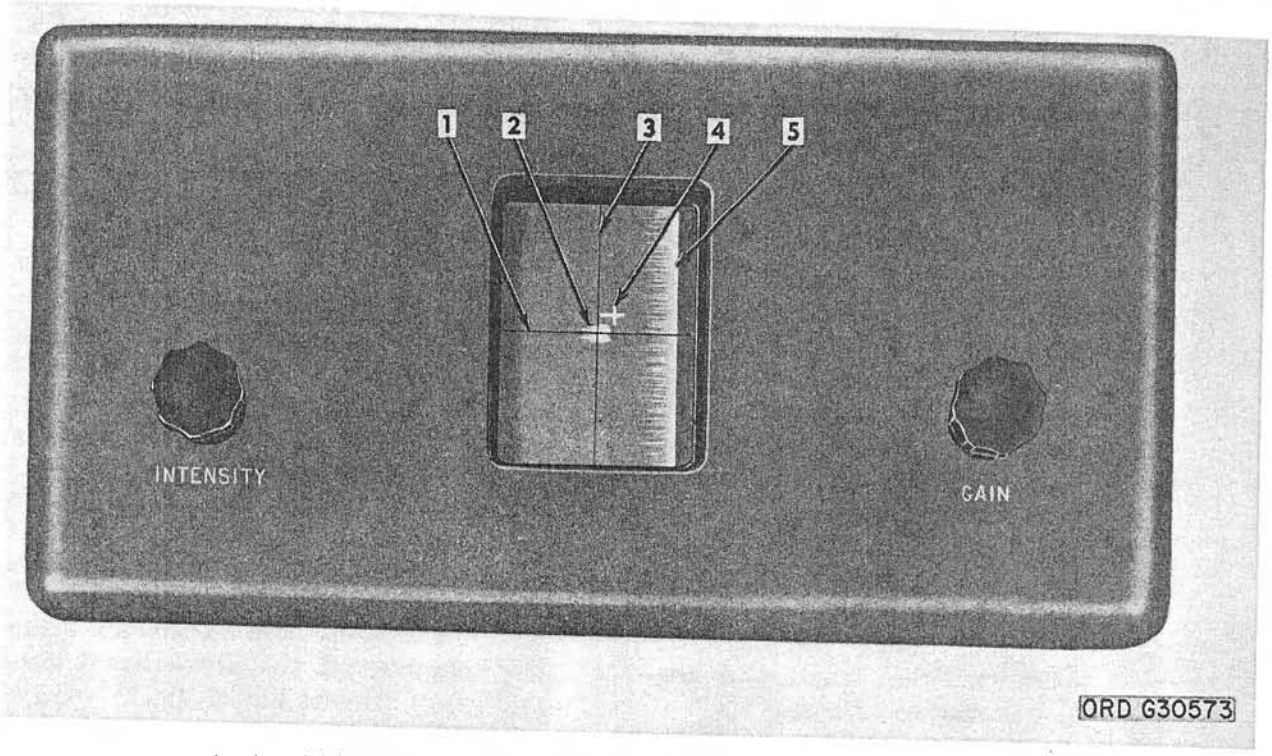

1—Acquisition range line
2—Return signal (designated target)
3—Acquisition azimuth line
4—Electronic cross
5—Electronic sweep

Figure 19 (U). Precision indicator — basic presentation (U).

interconnecting group (6, fig. 14) is located against the roadside wall of the trailer mounted director station. The interconnecting group consists of the HIPAR auxiliary acquisition control-indicator, LOPAR auxiliary control-indicator, IFF auxiliary control-indicator, fixed attenuator, PPI test panel, and anti-jam display (AJD) equipment. The controls and indicators on the auxiliary acquisition control interconnecting group provide remote control of the acquisition radar and SIF/IFF systems during test and setup operations and are not normally used during an engagement. The functions provided include selection of the transmitter frequency for the acquisition radar systems and setting of codes for the SIF/IFF system.

e. Early Warning Plotting Board. The early warning plotting board (5, fig. 14) is located on the roadside wall of the trailer mounted director station. The early warning plotting board provides the battery control officer with target early warning position information. The information is received over the telephone network from the Army Air Defense Command Post (AADCP) and manually plotted by the early warning plotting board operator.

f. Computer Group. The computer group (1, fig. 14) is located against the roadside wall of the trailer mounted director station. The computer group consists of the computer amplifier relay group (2, fig. 14), the servo computer assembly (3, fig. 14), and the computer power supply (4, fig. 14).

g. Radar Bomb Scoring Equipment. During radar bomb scoring missions, additional equipment is located in the trailer mounted director station to adapt the Improved NIKE-HERCULES System for bomb scoring operation. The equipment consists of an RBS control unit (fig. 19.1), an RBS scale factor unit, and communication equipment. This additional equipment is Air Force materiel which is connected to the Improved NIKE-HERCULES System during radar bomb scoring missions only. The equipment is normally operated by Air Force personnel.

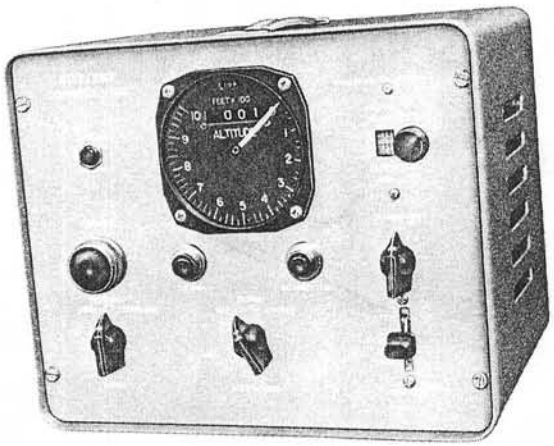

ORD G62731

Figure 19.1 (U). RBS control unit (U).

23.1 (CMHA). Trailer Mounted Director Station NIKE-HERCULES ATBM System

a. General. The trailer mounted director station (fig. 19.2) used in the NIKE-HERCULES ATBM System is similar to that used in the Improved NIKE-HERCULES System. Refer to paragraph 23 for a description of the director station group (4, fig. 19.2), the recorder group (8, fig. 19.2), the auxiliary acquisition interconnecting group (3, fig. 19.2), the early warning plotting board (2, fig. 19.2), and radar bomb scoring equipment.

b. Battery Control Console. The battery control console (9, fig. 19.2) is located against the curbside wall of the trailer mounted director station. The battery control console contains the PPI's, the automatic plotting boards, the control indicators and other controls associated with the acquisition radar systems, the computer system, and the tactical control system. The horizontal plotting board (1, fig. 19.3), the altitude plotting board (2, fig. 19.3), and the two PPI's (4 and 8, fig. 19.3) display data used during an engagement.

(1) *Horizontal plotting board.* For a description of the presentation on the horizontal plotting board refer to paragraph 23c (1).

(2) *Altitude plotting board.*

(*a*) The altitude plotting board (2, fig. 19.3) provides means for automatically plotting target and missile altitude data against time-to-intercept data. The altitude plotting board (fig. 19.4) is equally divided into the separate surfaces. During an anti-missile (A-M) mission, the TARGET and MISSILE plotting boards provide an altitude coverage of 300,000 feet. During an anti-aircraft (A-A) mission, the TARGET and MISSILE plotting boards provide an altitude coverage of 100,000 feet. The MISSILE (right) plotting surface, graduated from 0 to 200 (center to right) represents time-to-intercept in seconds. The TARGET (left) plotting surface, graduated from 0 to 200 (center to left), represents time-to-intercept in seconds. Each plotting surface has ten horizontal lines and five vertical lines. Each of the ten horizontal lines represents 10,000 feet in altitude for the antiaircraft mission and 30,000 feet for the anti-missile mission; each of the five vertical lines for both plotting boards represents 40 seconds of time-to-intercept. Positions of points which fall between the lines must be estimated. Engraved on the transparent plastic backboard are two curved lines which represent the dead zones of the NIKE-HERCULES ATBM System. These curved lines are shown as part of the MISSILE plotting surface on the altitude plotting board. During an anti-missile

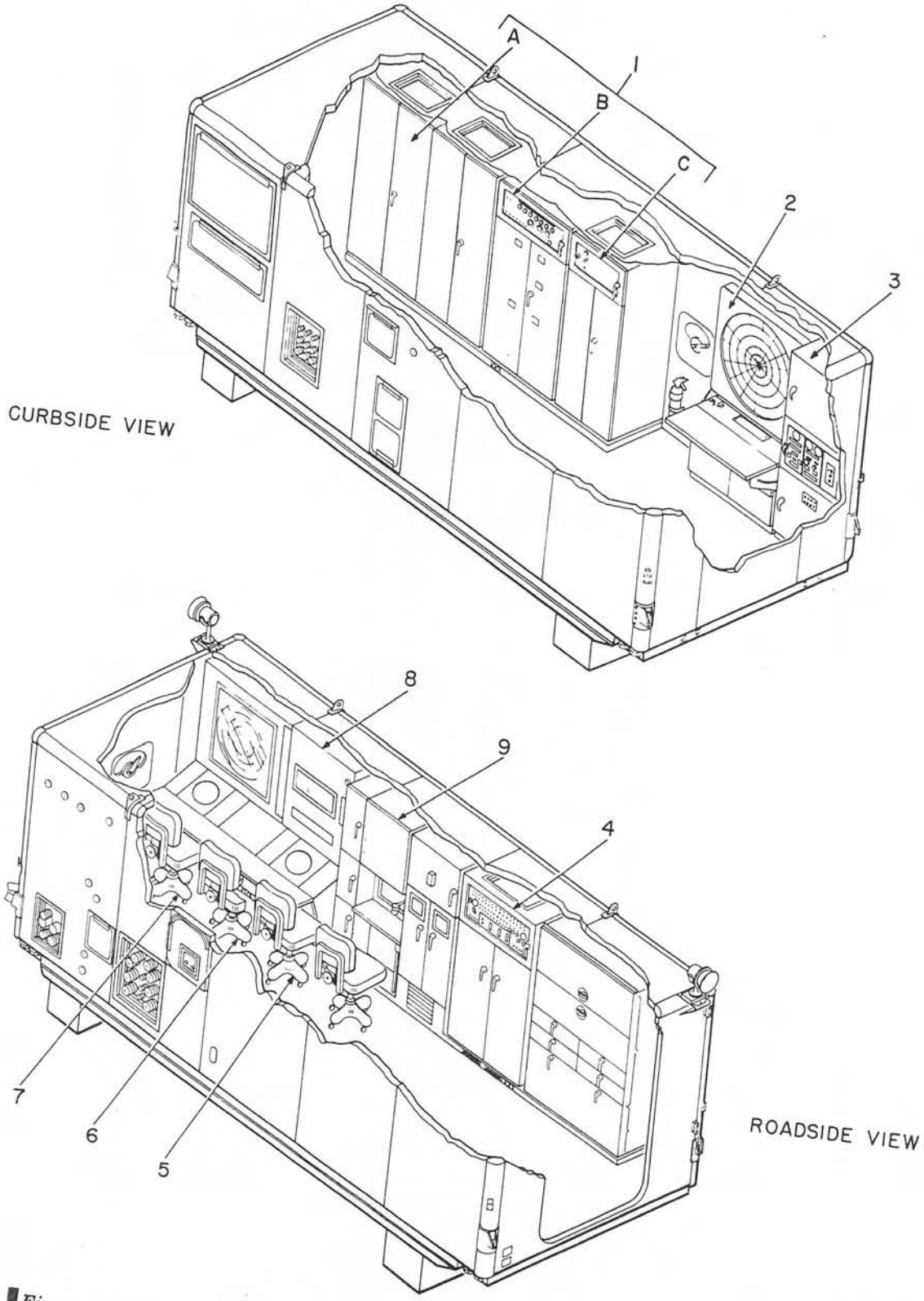

Figure 19.2 (U). Trailer mounted director station—ATBM system—cutaway view (U).

ORD G258940

1. Computer group
   A. Computer amplifier relay group
   B. Servo computer assembly
   C. Computer power supply group
2. Early warning plotting board
3. Auxiliary acquisition control interconnecting group
4. Director station group
5. Long range surveillance operator's chair
6. Battery control officer's chair
7. Short range surveillance operator's chair
8. Recorder group
9. Battery control console

Figure 19.2 (U). Trailer mounted director station—ATBM system—cutaway view—legend (U).

sion, the A–M mission dead zone is used, and during an antiaircraft mission, the A–A dead zone is used.

(*b*) A typical engagement plot by the altitude plotting board during an antiaircraft mission is displayed on figure 19.4. The display shows three plots in the vertical plane: plot of the altitude of the predicted intercept point by the MISSILE plotting pen before fire (point C to fire), plot of the altitude of the target by the TARGET plotting pen throughout the entire engagement (point E to point A), and plot of the altitude of the missile by the MISSILE plotting pen shortly after fire (point D to point B). Both pens also simultaneously plot time-to-intercept along the horizontal axis. Timing marks appear on each plot at approximately 10-second intervals.

(*c*) When the target entered the defended area (point C and point E), the altitude of the predicted intercept point was plotted by the MISSILE plotting pen at approximately 53,000 feet. The plot of the altitude of the predicted intercept point continued until the MISSILE pen plotted approximately 125 seconds to time-to-intercept. At this time, the fire order was issued as shown by the fire mark on the TARGET plot. The TARGET plotting pen continued to plot present target altitude against time-to-intercept. The MISSILE plotting pen fire stopped plotting predicted intercept point and started to plot missile altitude against time-to-intercept (point D). As time-to-intercept decreased, the two plots moved closer together. At zero time-to-intercept, or burst, the missile and target altitude were coincident (points A and B).

(3) *PPI.*

(*a*) Two identical PPI's, both containing cathode-ray storage tubes, are used to display the acquisition presentation of the NIKE–HERCULES ATBM System. The long range PPI (4, fig. 19.3) has two range display modes of operation. When the LONG RANGE indicator light illuminates (blue), the range displayed is 350,000 yards. When the SHORT RANGE indicator light illuminates (green), the range displayed is 150,000 yards. The short range PPI (8, fig. 19.3) also has two range display modes of operation. When the LONG RANGE indicator light illuminates, the range displayed is 150,000 yards. When the SHORT RANGE indicator light illuminates, the range displayed is 75,000 yards. Except for the actual range coverage, the presentation seen on the short range PPI is the same as seen on the long range PPI. Since the presentation on both PPI's is the same, only the long range PPI will be discussed. The basic target video, reference marks and ECM effects appearing on the PPI are shown on figure 19.5.

Note. Key numbers shown in parentheses in (*b*) below refer to figure 19.5.

(*b*) The basic presentation is displayed on the cathode-ray storage tube (9). The presentation consists of a jamming target (3), quiet target (6), target and trace (tail) (8), designated target (11), target designate circle (1), jam strobe (2), chaff cloud or clutter (4), rotating radial sweep (5), target designate circle from other target designate control

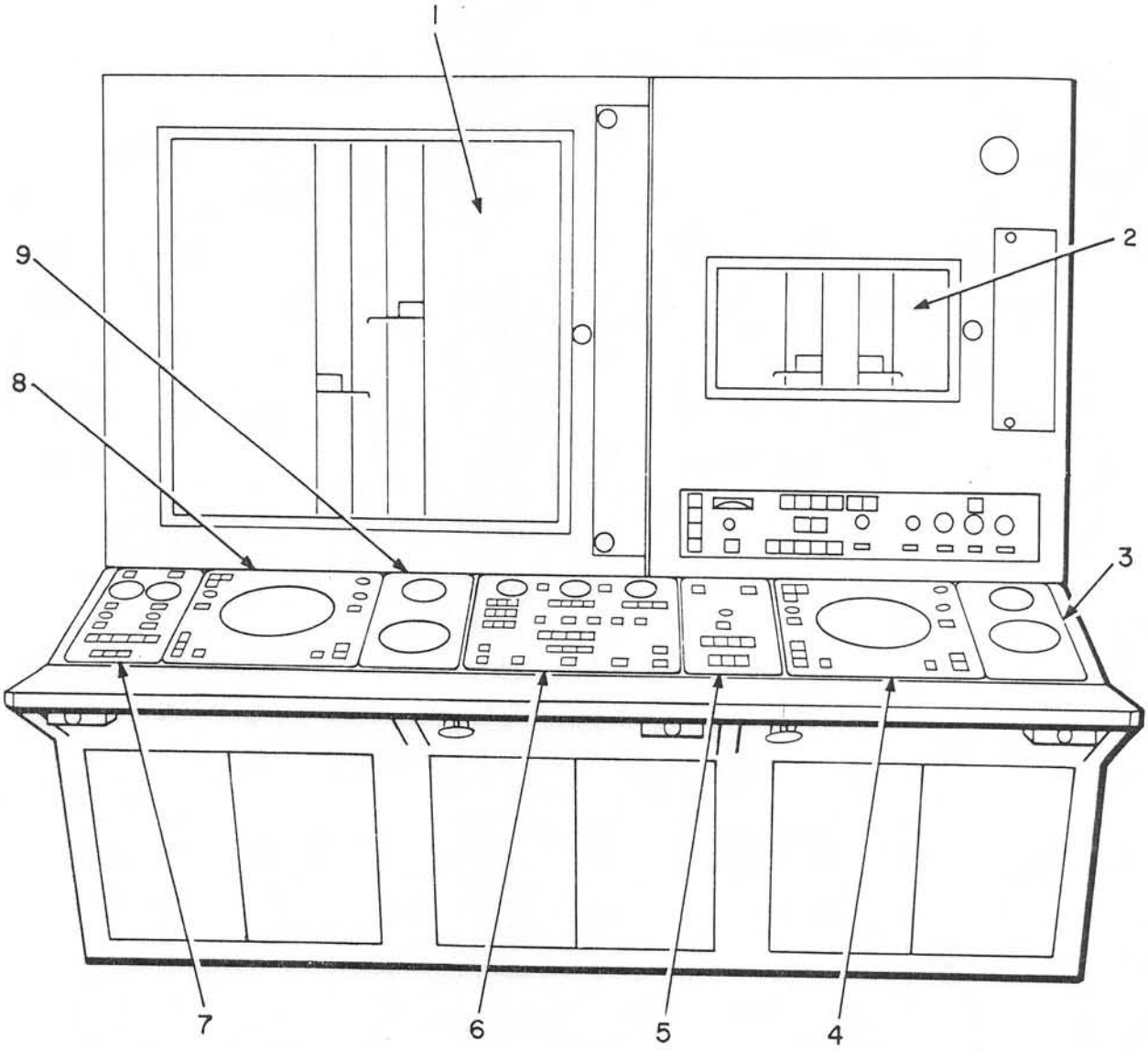

ORD G258923

1. Horizontal plotting board
2. Altitude plotting board
3. Long range target designate control
4. Long range PPI
5. HIPAR control-indicator
6. Fire control-indicator
7. LOPAR control-indicator
8. Short range PPI
9. Short range target designate control

Figure 19.3 (U). Battery control console—ATBM system (U).

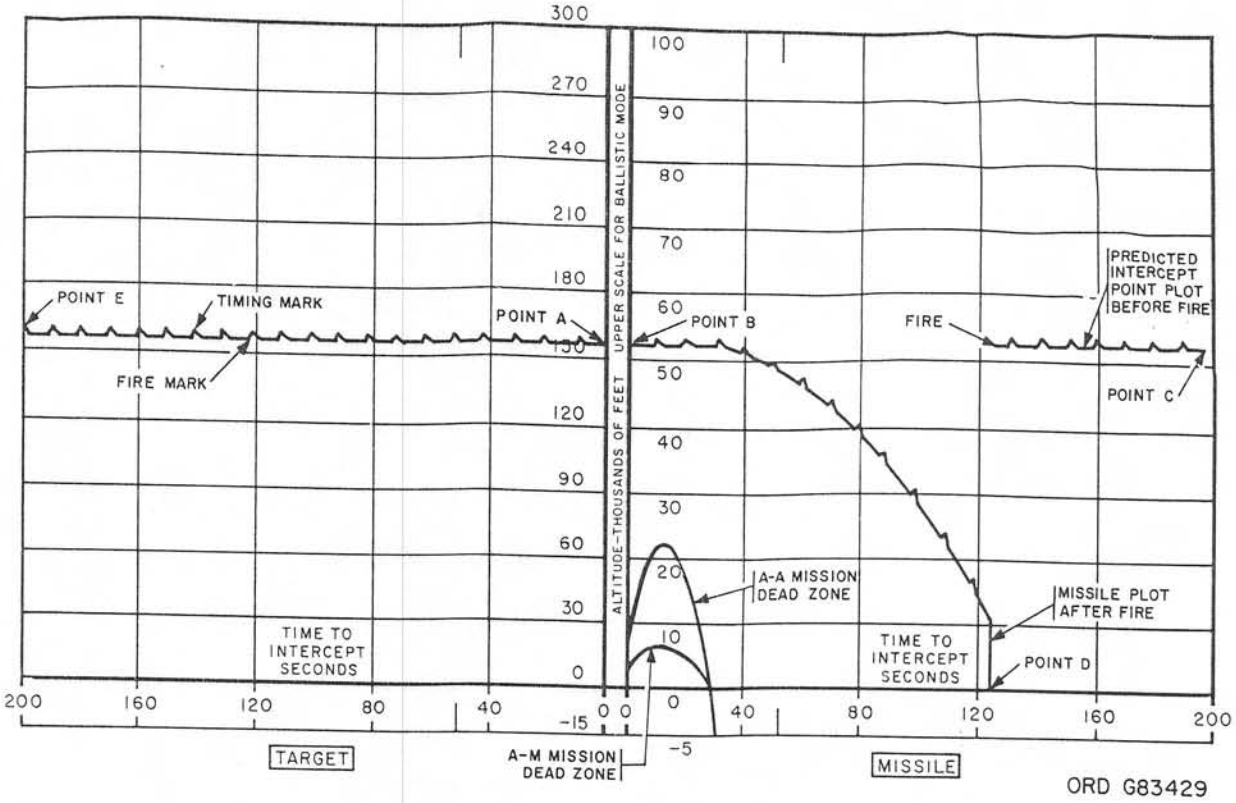

Figure 19.4 (C). Altitude plotting board presentation (U).

(7), and track electronic cross (10). These basic types of presentations are discussed in *1* through *8* below.

1. *Target video.* Target video becomes a part of the basic presentation when either the LOPAR or HIPAR/AAR system is operating and a target is present within the radar range. Target video appears as a bright spot or arc with each rotation of the rotating radial sweep. Different types of target video may be seen on the PPI. A jamming target may or may not appear in the jam strobe depending upon the output of the jammer and the magnitude of the reflected signal from the target. A quiet target is one not using ECM techniques. The designated target is encircled by the target designate circle.
2. *Jam strobe.* The jam strobe will be displayed if CW or noise jamming is present. The jam strobe appears at azimuth of an individual jamming target. If the jamming target is obscured in the strobe and is the target to be engaged, only azimuth information is transmitted to the target tracking radar during the designate phase of operation.
3. *Chaff cloud or clutter.* A chaff cloud or clutter will be displayed on the PPI, but due to the AJD capability of the HIPAR/AAR system, this effect will be greatly reduced.
4. *Rotating radial sweep.* The rotating radial sweep extends from the center to the outer edge of the cathode-ray storage tube. The sweep rotates clockwise around the cathode-ray storage tube in synchronism with the rotation of the acquisition antennas (HIPAR/AAR or LOPAR). Once during each revolution, the sweep brightens

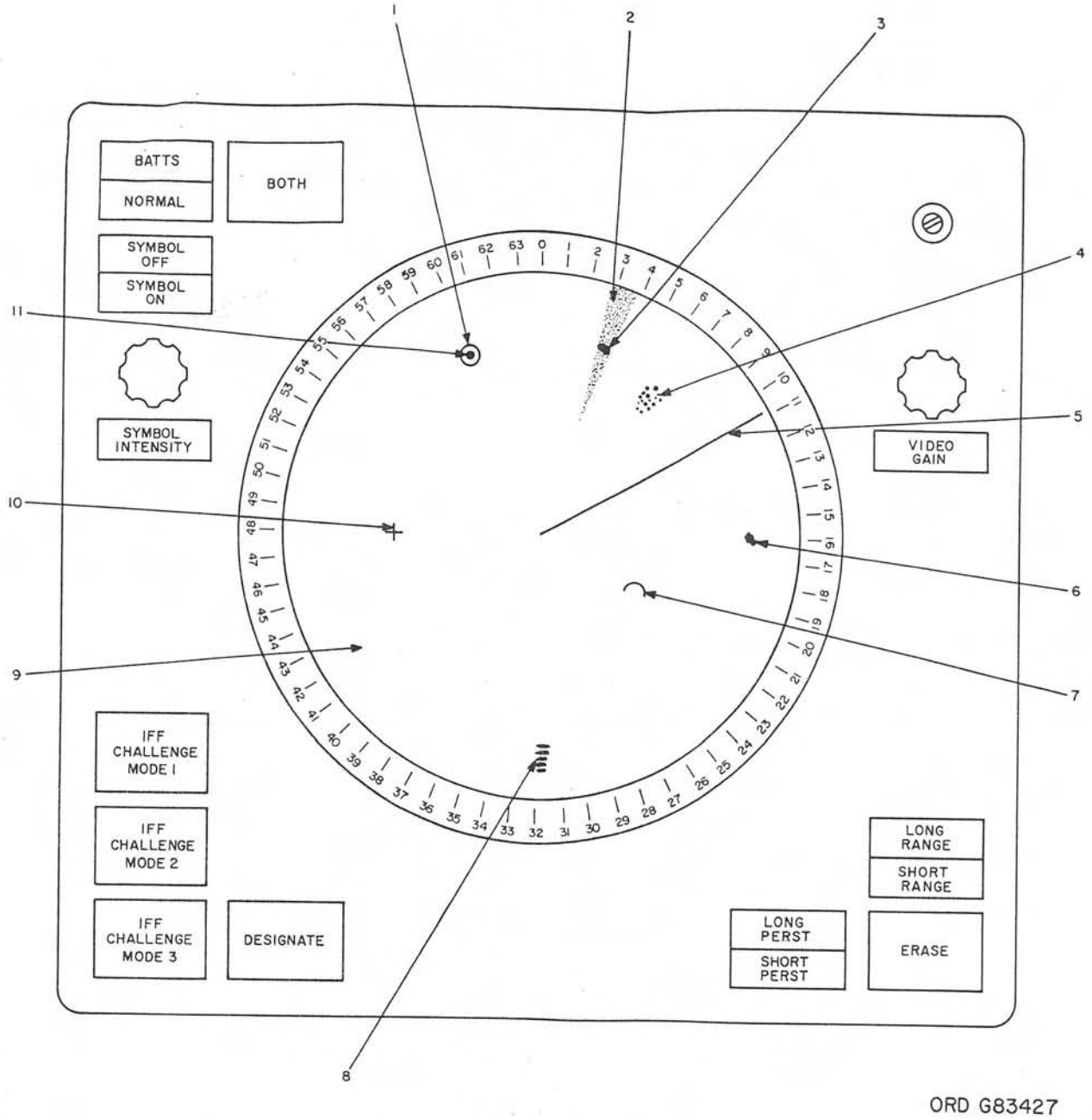

1. Target designate circle
2. Jam strobe
3. Jamming target
4. Chaff cloud or clutter
5. Rotating radial sweep
6. Quiet target
7. Target designate circle from other target designate control
8. Target and trace (tail)
9. Cathode-ray storage tube
10. Track electronic cross
11. Designated target

Figure 19.5 (C). Basic PPI presentation (U).

all displays on the cathode-ray tube as the sweep coincides with each display.

5. *Target designate circle from other target designate control.* The target designate circle from the other target designate control appears as a semicircle, provided the range control is depressed and the range control is positioned in range. If this designate circle is tracking a target, target video will appear in the center of the semicircle.

6. *Target and trace (tail).* When the LONG PERST indicator light illuminates, the persistence of the cathode-ray storage tube is such that video, as well as ECM, remains on the face of the PPI. A trace (tail) will be left behind a moving target. To remove these traces the ERASE switch is depressed.

7. *Target designate circle.* The target designate circle appears as a circle on the PPI, provided the range control is depressed and is positioned in range to a point other than maximum range. The position of this circle is controlled by the range control and azimuth HUNDREDS OF ANGULAR MILS dial on the target designate control (3 and 9, fig. 19.3).

8. *Track electronic cross.* The track electronic cross appears once during each revolution of the rotating radial sweep when the sweep is coincident with the azimuth and range settings of the target tracking radar system.

c. Computer Group. The computer group (1, fig. 19.2) is located against the roadside wall of the trailer mounted director station. The computer group consists of the computer amplifier relay group (1A, fig. 19.2), the servo computer assembly (1B, fig. 19.2), and the computer power supply group (1C, fig. 19.2). The computer group contains circuits for computing predicted target and missile positions and generating data for orders to the missile for target intercept and burst. In the ATBM system, circuits within the computer group have been modified to permit the anti-missile mission.

1. Target ranging radar control
2. Missile radar control console
3. Radar set group
4. Elevation operator's position
5. Azimuth operator's position
6. Target range operator's position
7. Target radar control console
8. Radar power supply group
9. Radar coder set
10. Tracking supervisor's position
11. Missile tracking operator's position

Figure 20 (U). Trailer mounted tracking station—cutaway view—legend (U).