TECHNICAL MANUAL
No. 5-1450-201-15

HEADQUARTERS
DEPARTMENT OF THE ARMY
WASHINGTON, D. C., *11 August 1966*

Organizational, DS, GS, and Depot Maintenance Manual
ELEVATOR, HYDRAULIC; GUIDED MISSILE, AUTOMATICALLY OPERATED DOORS, (WAYNE PUMP COMPANY) TYPE B: FSN 1450-315-2804, TYPE C; FSN 1450-315-2805, TYPE B4 AND B5: FSN 1450-570-6923 TYPE D: FSN 1450-656-2310

*This manual supersedes TM 5-1450-201-10, 27 April 1959, including C 2, 18 December 1961, C 4, 19 August 1963, and C 5, 3 June 1964; TM 5-1450-201-20, 14 July 1960, including C 1, 15 August 1961, C 2, 29 November 1961, C 3, 3 August 1962, C 4 15 August 1963, and C 5, 25 April 1964; TM 5-1450-201-35, 30 June 1958, including C 1, 29 June 1960, C 3, 3 August 1962, C 4, 9 April 1963, and C 5, 30 April 1964; TM 5 1450-200-10, 30 December 1963; TM 5-1450-200-20, 22 January 1964, including C 1, 17 March 1965; and TM 5-1450-200-35, 6 March 1964, including C 1, 17 March 1965.

Pressure setting _____319 psi (pounds per square inch)

(*b*) *Type D, B-4, B-5.*

Manufacturer _____J.E. Lonergan Co.
Model _____HRV-15 Special
Pressure setting _____465 psi

(6) *Relief valve, pump No. 2.*

(*a*) *Type B and C.*

Manufacturer _____J.E. Lonergan Co.
Model _____HRV-12 Special
Pressure setting _____319 psi

(*b*) *Type D, B-4, B-5.*

Manufacturer _____J.E. Lonergan Co.
Model _____HRV-15 Special
Pressure setting _____465 psi

(7) *Dimensions, weights, and performance data.* Refer to table 1-1.

Table 6-1. Time Standards—Continued.

Man-hours

4301 Strainers, filters, hose, pipe, fittings, tubing—Continued
Strainer suction ----------1.8
(Remove, disassemble, clean strainer screen reassemble and replace.)

4305 Manifold and/or Control Valves:
Relief valves, pump ----------0.4
(Adjustment only.)
Valve assembly, door cylinder flow control ----------0.8
(Adjustment of four valves.)

4307 Hydraulic Cylinder:
Packing main cylinder ----------0.6
(Adjustment to overcome see page.)
Cylinder assembly, door and locking bar ----------0.5
(Adjustment and Bleeding.)
Cylinder assembly, door and locking bar ----------1.0
(Replacement of packing.)

47 GAGES (NON-ELECTRIC) WEIGHING AND MEASURING DEVICES

4702 Gages:
Gage, tubular, sediment sight ----0.4
(Remove sight tube, clean and replace).

30 REMOVE AND REPLACE—ELEVATOR, SPECIAL PURPOSE

3000 Hydraulic Elevator Assembly:
Angle assembly, door opening ----117.5
(Includes removal and installation of access cover plates, side seals, end seals, end assemblies, form pans and concrete.)
Bolt assembly, anchor ----------1.0
(Time required for welding replacement to existing broken stud.)
Bolt anchor, cylinder and pedestal--3.0
(Includes removal and installation of pedestals and pedestal grout.)
Screw, adjusting, hinge box --------0.5
(Replace.)

3100 Equalizer Assembly:
Equalizer assembly ----------30.0
(Includes removal and installation of equalizer cables, clamps, eye bolts, cable sheave, sheave brackets and tie angles. Also includes tightening and adjusting cable upon reinstallation.)
Bolt eye ----------1.0
(Replace.)
Eye, wire rope ----------0.7
(Replace.)
Clip, wire rope ----------0.3
(Replace.)
Sheave assembly ----------2.0
(Includes removal and reinstallation of sheave pin and adjusting equalizer cable.)
Bearing, sheave ----------3.0

Table 6-1. Time Standards—Continued.

Man-hours

3001 Equalizer Assembly—Continued
(Includes removal of sheave, cable retainer and sheave pin. Also includes equalizer cable adjustment upon reinstallation.)
Pin, assembly, sheave ----------2.0
(Includes removal and installation of cable retainer.)
Pin, cotter ----------0.1
(Replace.)
Grease, fitting ----------0.2
(Replace.)
Cable, equalizer ----------1.8
(Replace.)
Rail assembly, guide ----------11.0
Shaft, pulley ----------2.0
Separator assembly ----------1.8
Fittings, lubrication (ea) --------0.3

3002 Doors, Hinges:
Door assembly, tape "C" ----------23.5
(Includes removal and reinstallation of access cover plates, door seals, door linkage for type B doors.)
(Includes alignment and installation of insert splice.)
Door assembly, type "B" --------27.5
(Includes removal and reinstallation of access cover plates, door seals, door linkage for type B doors.)
Include alignment and installation of insert splice.)
Pin, hinge ----------1.7
(Replace.)
Strips, rubber sealing ----------5.0
(Time required for removal and installation of one 52-foot seal.)
Box assembly, hinge ----------10.0
(Includes removal and installation of door hinge pins, access cover plates, weather seals and shimming of replacement assembly.)
Pin assembly, hinge cylinder mounting ----------0.8
(Includes removal and reinstallation of access cover plates.)
Pin, hinge ----------0.8
(Includes removal and reinstallation of access cover plates.)
Strap, locking ----------0.6
(Field weld in place.)
Stops, assembly, door ----------4.3
(Replace.)
Stops assembly, rubber ----------0.5
(Replace.)
Arm assembly, door operating ------4.5
(Replace.)
Pin assembly, hinge ----------0.4
(Replace.)

Table 6-1. Time Standards—Continued.

	Man-hours
3002 Doors, Hinges—Continued	
Pin, hinge (Replace.)	0.4
Strap, locking (Field weld in place.)	0.6
Bearing, hinge (Bearing and door hinge—includes removal and reinstallation of hinge box.)	11.0
3003 Chassis Platform and Guide Rail Assembly:	
Platform Assembly B and C (Includes removal and reinstallation of Ajax launcher; pouring concrete and installing safety sheet in aft platform section and alignment installation and welding of all sections.)	22.3
3003 Chassis Platform and Guide Rail Assembly:	
Platform assembly, B and C (Includes removal and reinstallation of Ajax launcher; pouring concrete and installing safety sheet in aft platform section and alignment installation and welding of all sections.)	22.3
Platform assembly, D, B4 and B5 (Includes removal and installation of Hercules launcher; pouring concrete and installing safety sheet in aft platform section and alignment installation and welding of all sections.)	26.6
Rail assembly, guide (Includes removal and installation of end angle assembly, plumbing and shimming new guide rail installation)	11.6
3006 Pedestal, Leveling Jacks:	
Pedestals, assembly, buffer (Includes grouting and leveling pedestals.)	3.0
Chain, safety (Replace.)	0.2
Pin, straight, headless (Replace.)	0.3
Screw, cap (Replace.)	0.1
Lock, jack screw (Replace.)	0.3
3007 Bar Assembly, Locking:	
Bar assemblies (Includes removal and installation of access cover plates, limit switches and cams, locking bar and bracket must be removed and an assembly.)	13.0
Bar assembly (Includes removal and installation of access cover plates, limit switches and cams, locking bar and bracket must be removed as an assembly.)	13.7

Table 6-1. Time Standards—Continued.

	Man-hours
3007 Bar Assembly, Locking—Continued	
Bracket assembly, locking bar (Includes removal and reinstallation of access cover plates, limit switches, cams and cylinders.)	4.7
Fitting, grease (Replace.)	0.2
Pin, pivot (Replace.)	0.5
Pin, cotter (Replace.)	0.2
Linkage, bar operating (Replace.)	0.6
Spacer (Replace.)	0.2
Links (Replace each)	0.3
Bolts (Replace.)	0.2
40 ELECTRIC MOTORS	
4000 Motor Assembly:	
Motor, electric (Includes removal and installation of V-belts, sheave and hub and realignment of V-belt drive.)	4.5
4007 Drive Components:	
Pulley (Includes realignment of V-belt drive.)	1.2
Belts (Includes realignment of V-belt drive.)	1.0
42 ELECTRICAL EQUIPMENT	
4201 Transformer, Power Line or Distribution:	
Transformer, auto	4.5
4202 Electrical Controls:	
Block, terminal (Includes removal and reinstallation of all wiring connections.)	1.0
Cables, control electric (Replace.)	4.7
Panel assembly, control (Includes removal and reinstallation of all connecting electrical wiring.)	32.0
4203 Circuit Breaker Cutout Devices:	
Circuit breaker assemblies (ea) (Time required for removal and replacement of one motor controller assembly complete and mounted on bakelite insulating board.)	4.4
Spring, contact (Replace.)	0.2
Coil, shading (Replace.)	0.2
Coil, holding (Includes removal and replacement of cotter pin and wooden stop.)	0.4
Arc, shield (Replace.)	0.1

Table 6-1. Time Standards—Continued.

		Man-hours
4203	Circuit Breaker Cutout Devices (Continued)	
	Contacts, movable and stationary	0.2
	(Time required for replacement of one movable and one stationary contact)	
	Switch assembly, push button (Replace.)	0.8
	Switch, selector rotary (Replace.)	1.0
	Relay assembly, thermal overload, motor starter (Replace.)	0.6
	Cover assembly, trip (Replace.)	0.3
	Coils, heater	0.4
	(Includes removal and reinstallation of trip cover.)	
	Base	1.0
	(Includes removal and reinstallation of trip cover and heater coils.)	
	Relay assembly, timing	0.6
	(Includes adjustment.)	
	Coil (Replace.)	0.4
	Switch assembly, limit	0.9
	(Includes adjustment.)	
	Switch, pressure (Replace.)	0.7
	Relay, control (Replace.)	0.6
4206	Thermostatic, Automatic and Manual Controls:	
	Valve assembly, solenoid, 2-way	2.0
	(This is average time. Depending on the valve being replaced, time ranges from 1.3 hours to 3.8 hours.)	
	Cap, adjusting screw (Replace.)	0.1
	Gaskets (Replace.)	0.8
	Wheel, hand (Replace.)	0.2
	Solenoid, O-ring, seal (Replace.)	0.6
	Valve assembly, solenoid 4-way (Replace.)	2.9
	Coils, solenoid (Replace.)	0.4
	O-rings (Replace.)	0.6
43	HYDRAULIC, FLUID, AIR AND VACUUM SYSTEM	
4300	Hydraulic System:	
	Power unit assembly	24.0
	(Includes removal and reinstallation of all connecting Electric wiring and hydraulic piping.)	

Table 6-1. Time Standards—Continued.

		Man-hou
4301	Strainers, Filters, Hose, Pipe, Fitting, Tubing:	
	Bolt, lag (Replace.)	0.1
	Rods (Replace)	0.3
	Shields, expansion (Replace.)	0.4
	Hose, assembly, rubber	0.9
	(Includes removal, replacement and ai bleeding one cylinder.)	
	Clamp, hose (Replace.)	0.2
	Syphon, straight pattern (Replace.)	0.3
	Strainer assembly, pipe line (Replace.)	1.4
	Gaskets (Replace.)	0.6
	Screen (Replace.)	0.6
	Strainer suction	1.0
	(Includes removal and replacement of reservoir access cover and oil in reservoir sump.)	
	Element, filter	1.3
	(Includes removal from system, disassembly and reassembly of filter.)	
	Gaskets	1.3
	(Includes removal from system, disassembly and reassembly of filter.)	
4302	Pump and Pump Drives:	
	Pump assembly, hydraulic	6.0
	(Includes removal and installation of motor, V-belts, sheave and hub, adjustment of realignment of V-belt drive.)	
	Fittings, grease (Replace.)	0.1
	Seal, pump shaft	4.0
	(Includes removal and installation of V-belts, sheave and hub and realignment of V-belt drive.)	
	Pulley, pump drive (Replace.)	1.8
4305	Manifold and/or Control Valves:	
	Valve, relief (Replace.)	0.8
	Gaskets (Replace.)	0.1
	Valve, check (Replace.)	3.6
	Valve, assembly, flow control (Replace.)	0.6
	Gaskets, O-ring (Replace.)	0.3

Table 6-1. Time Standards—Continued.

	Man-hours
4305 Manifold and/or control valves—Continued	
Valves, gate and globe	4.5
Handwheel, valve (ea)	0.5
Packing, valve stem (ea)	0.7
Valve, needle	0.6
4307 Hydraulic Cylinder:	
Cylinder and plunger assembly	120.0
(Includes removal and replacement of concrete cap and sand from casing, cleaning power unit, filtering hydraulic fluid and air bleeding.)	
Plunger assembly	24.0
(Remove and replace.)	
Gaskets, cylinder flange	3.0
(Replace.)	
Packing, cylinder	2.6
(Replace.)	
Plug, pipe	0.1
(Replace.)	
Wiper ring	0.7
(Replace.)	
Cylinder assembly, door & locking bar (ea)	2.5
(Includes removal, replacement and air bleeding one cylinder.)	
Packing	1.2
(Replace.)	
4308 Liquid Tank or Reservoir:	
Tank, oil: main supply	60.0
Breather, oil tank	0.8

Table 6-1. Time Standards—Continued.

	Man-hours
Pipe assembly, breather	1.0
Air cleaner assembly	1.5
(Includes servicing.)	
Cover, access	0.4
(Replace.)	
Gasket	1.6
(Includes removal of access plate and old gasket, bonding new gasket to cover plate and installation of this assembly.)	
Oil bath vent filter	0.3
(Replace.)	
47 GAGES (NONELECTRICAL) WEIGHING AND MEASURING DEVICES	
4702 Gages:	
Gage, sight, oil level	0.4
(Does not include replacement of welded base.)	
Gage, tubular, sediment sight	1.8
(Includes removal and replacement of reservoir access cover and oil in reservoir sump.)	
Gage, hydraulic oil pressure	0.2
(Replace.)	
Valve, globe	0.5
Bushings, tee's fittings (ea)	0.5

c. Hydraulic System. Refer to figure 6-1 for the hydraulic system diagram.

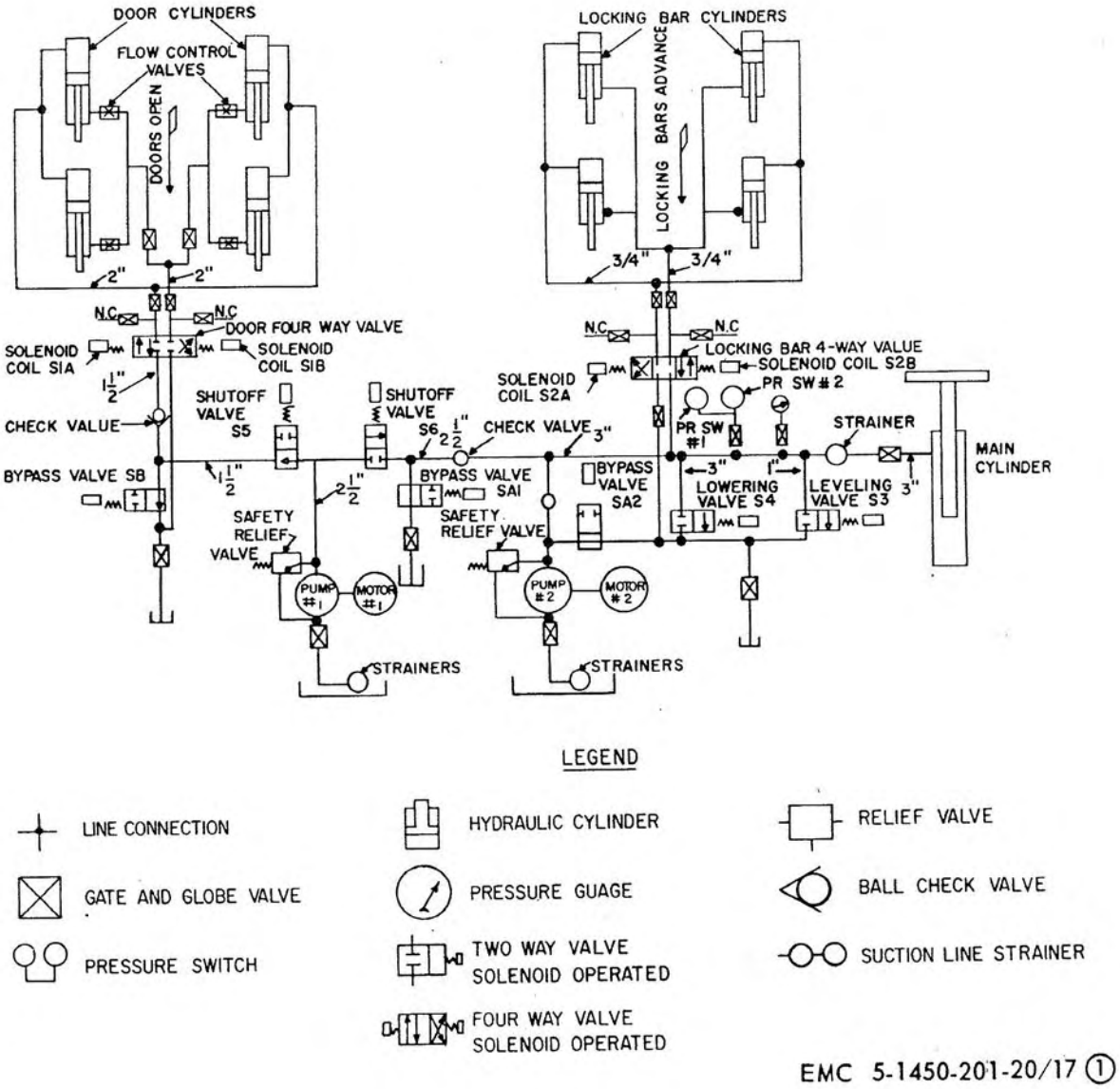

Figure 6-1 (1). Hydraulic system schematic diagram.

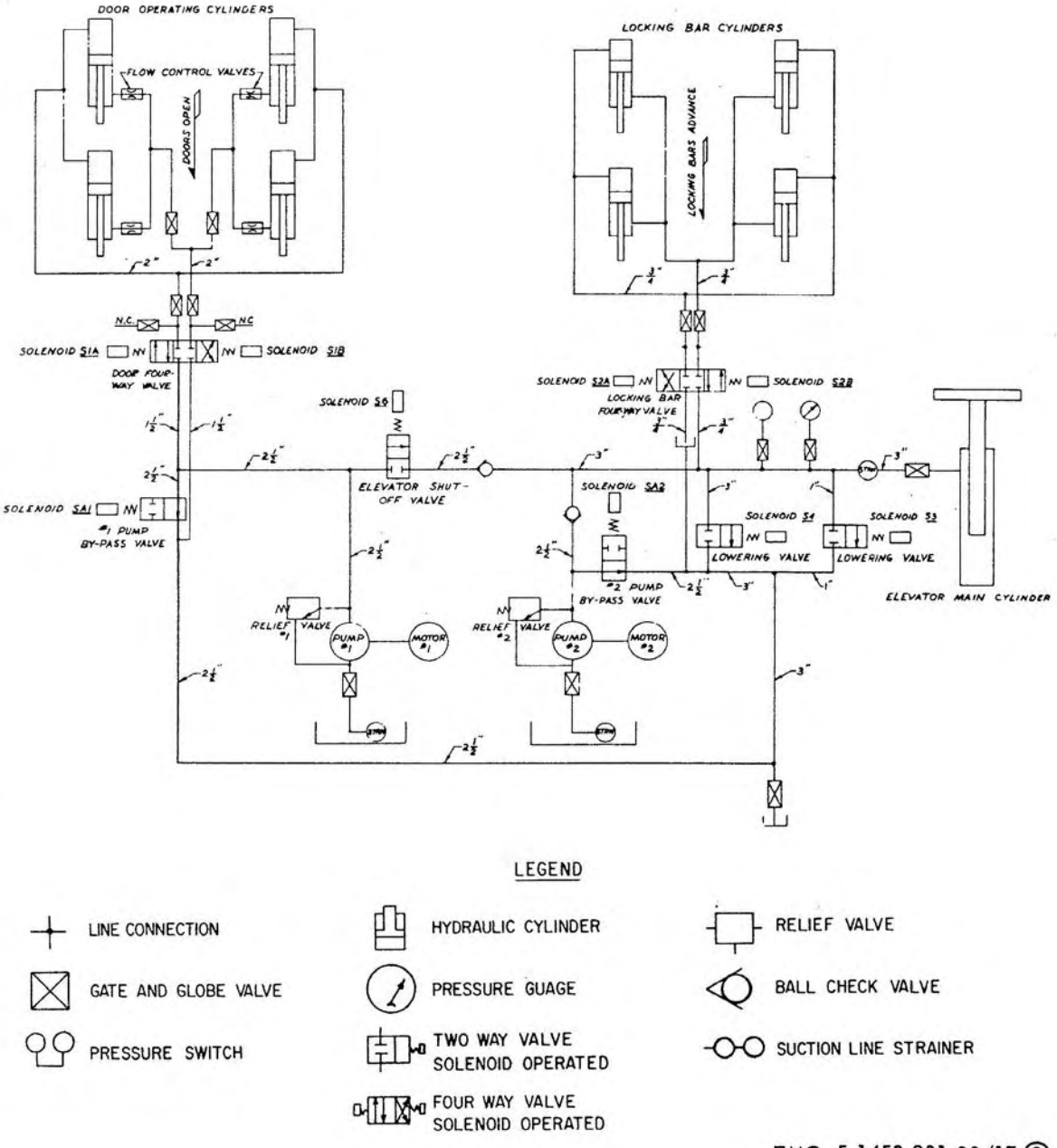

Figure 6–1 (2) —Continued.

d. Wiring Diagrams. Refer to figure 6–2 through 6–12 for wiring diagrams.

Figure 6–2. Elementary wiring diagram, power unit NE–5007.
(Located in back of manual)

Figure 6–3. Electrical system schematic, power unit NE–5007.
(Located in back of manual)

Figure 6–4. Elementary wiring diagram, power unit NE–50000.
(Located in back of manual)

Figure 6–5. Electrical system schematic, power unit NE–50000.
(Located in back of manual)

Figure 6–6. Elementary wiring diagram, power unit NE–50004.
(Located in back of manual)

Figure 6-7. Electrical system schematic, power unit NE-50004.
(Located in back of manual)

Figure 6-8. Elementary wiring diagram, power unit NE-50008.
(Located in back of manual)

Figure 6-9. Electrical system schematic, power unit NE-50008.
(Located in back of manual)

Figure 6-10. Elementary wiring diagram, power unit NE-50009 and NE-50010.
(Located in back of manual)

Figure 6-11. Electrical system schematic, power unit NE-50009.
(Located in back of manual)

Figure 6-12. Electrical system schematic, power unit NE-500010.
(Located in back of manual)

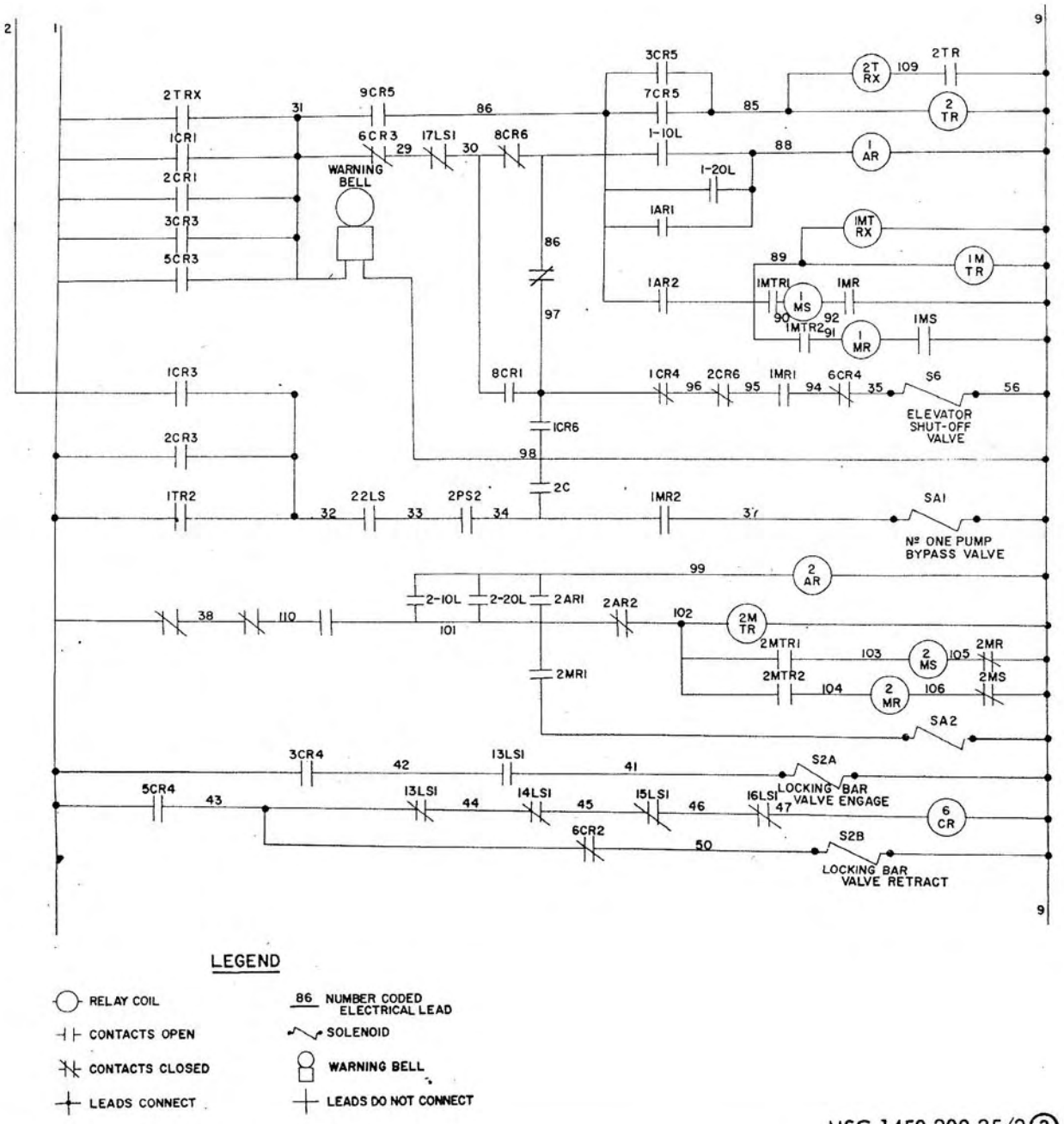

Figure 6-13 (1). Electrical system schematic, power unit 50012.

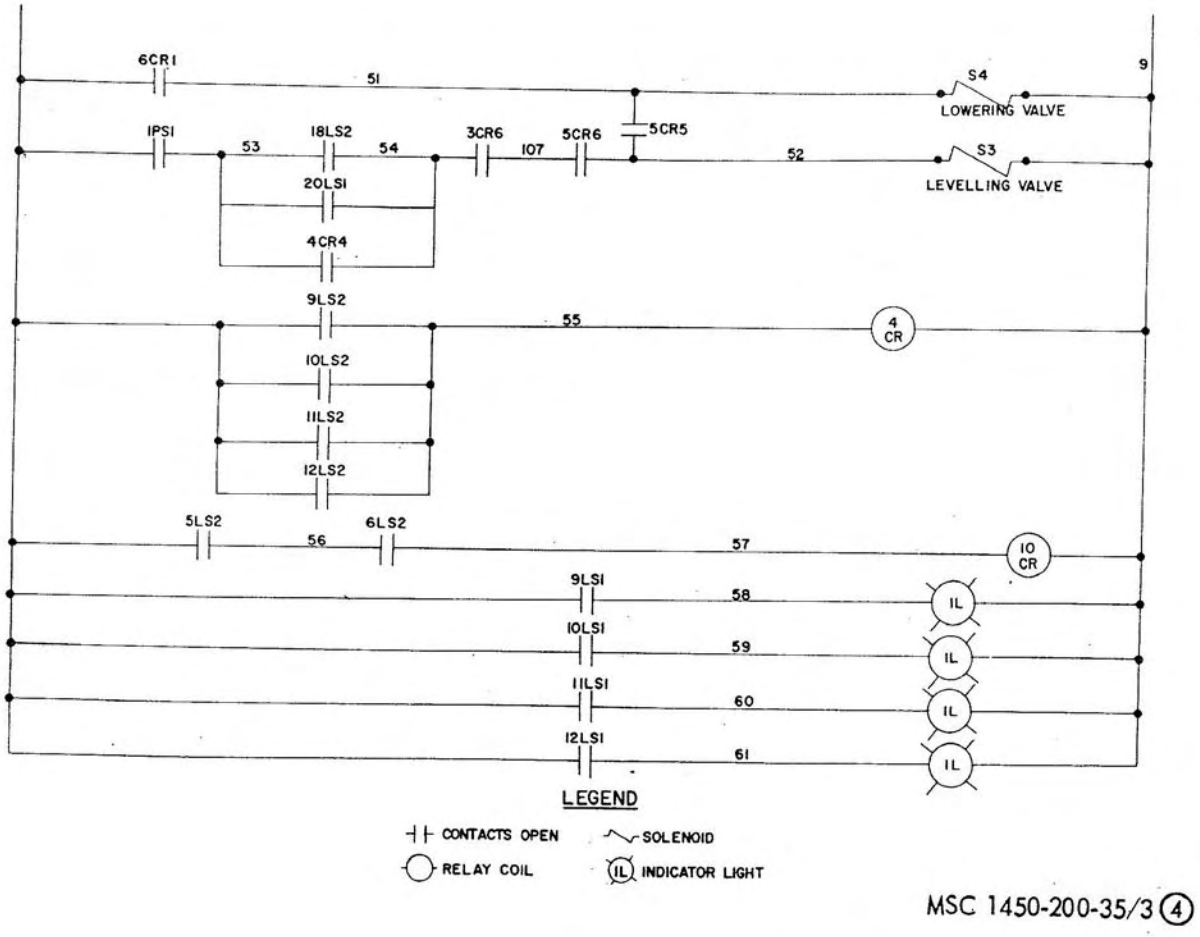

MSC 1450-200-35/3 (4)

Figure 6-13 (2) — Continued.

CHAPTER 7

GENERAL REPAIR INSTRUCTIONS

Section I. SPECIAL TOOLS AND EQUIPMENT

7-1. Special Tools and Equipment

The special tools and equipment required to perform the repair and overhaul operations on the hydraulic elevator are listed in table 7-1 and in TM 5-1450-201-25P. The five-digit code preceding the Federal stock number or part number is the Federal supply code number for the manufacturer of the tools.

Table 7-1. Special Tools and Equipment

Item	FSN or Part No.	References		Use
		Fig.	Par.	
Fixture: spring assembly, 3-piece	(64123) 11523-T-3.	----	----	Buffer-type pedestal spring removal and installation.
Ring, Holding: wiper strip.	(64123) 11523-T-5.	----	----	Buffer-type pedestal wiper strip installation.
Fixture: cylinder holding.	(65123) 11523-T-6.	----	----	Buffer-type pedestal cylinder disassembly and reassembly.
Wrench: for holding piston rod.	(64123) 11523-T-7.	----	----	Buffer-type pedestal piston rod removal and installation.

7-2. Direct and General Support and Depot Maintenance Repair Parts

Direct and general support and depot maintenance repair parts are listed and illustrated in TM 5-1450-201-25P.

7-3. Specially Designed Tools and Equipment

No specially designed tools or equipment are required by direct and general support maintenance personnel for the maintenance of the elevator.

Section II. TROUBLESHOOTING

7-4. General

This section provides information useful in diagnosing and correcting unsatisfactory operation and failure of the elevator and its components. Each trouble symptom stated is followed by a list of probable causes of the trouble. The possible remedy recommended is described opposite the probable cause.

DOORS OPEN CIRCUIT

7-5. No Response When DOORS OPEN Button Is Pressed (1CR and 1TR Relays Do Not Pick Up)

Probable cause	Possible remedy
Selector switch or associated wiring faulty.	Check continuity through the switch and wiring (Selector switch in MASTER position). Terminals 11 to 15 in control relay cabinet.

Table 1-1. Dimensions, Weights, and Performance Data

Subject	Manufacturer	Elevator types				
		B	C	D	B-4 (Okinawa)	B-5 (Hercules)
Elevator platform	Wayne	length: 51'8" width: 8'8"	length: 40'8" width: 8'8"	length: 53'8" width: 9'8"	length: 51'8" width: 8'8"	length: 51'8" width: 8'8"
Doors (2)	Wayne	length: 51'8" width: 4'3"	length: 40'8" width: 4'3"	length: 53'8" width: 4'7"	length: 51'8" width: 4'3"	length: 51'8" width: 4'3"
Lifting Capacity	------	17,000 lbs	17,000 lbs	31,000 lbs	30,000 lbs	30,000 lbs
Travel (high pedestals)	------	17'1"	17'1	16'0"	16'0"	16'0"
Elevator weight	Wayne	24,600 lbs	20,440 lbs	31,000 lbs	30,576 lbs	30,576 lbs
Power unit types	Wayne	NE-5007 or NE-50000	NE-5007 or NE-50000	NE-50012	NE-50008	NE-50009 or NE-50010
Oil tanks and sumps (gallons).	Wayne	271	271	271	271	271
Pedestals	Wayne	4	4	6	6	4
Platform speed of operation (high pedestals to locking bars).	------	32 seconds ± 3.	32 seconds ± 3.	32 seconds ± 3.	32 seconds ± 3.	32 seconds ± 3.
Clearance (doors or elevator to inner frame).	------	2"	2"	2"	2"	2"
Locking bars and locking bar cylinders.	Wayne	4	4	6	6	4
Hinges per door	Wayne	6	5	6	6	6
Center of gravity from aft end of elevator.	------	19'8"	15'11-3/4"	19'8"	19'8"	19'8"

Probable cause	Possible remedy
Circuit through push-buttons faulty.	Check continuity as follows: Terminals 15 to 7 (OPEN BUTTON) (button must be pressed for this test). Terminals 7 to 10 (CLOSE BUTTON). Terminals 3L2 to 14 (MASTER STOP). Terminals 14 to 29 (ELEVATOR STOP).
5LS1 and 6LS1 contacts open or wiring faulty.	Check continuity through 5LS1 and 6LS1. Terminals 10 to 38 in control relay cabinet.
Coil or 1CR burned out or has broken leads.	Check continuity through 1 CR coil. Terminals 38 to 29 (disconnect coil at terminals 38 for this test).

7-6. 1CR and 1TR Relays Pick Up, But Do Not Start — Warning Bell Rings

Probable cause	Possible remedy
Circuit through 17LS open.	Check continuity terminals 53 to 63.
Auxiliary relay contacts open.	Check for continuity through "Normally Closed" contacts of auxiliary relay.
Open circuit through 1CR1.	Check continuity 1CR1 (terminals 11 to 86) with circuit deenergized, relay held in manually.
Open circuit through 6CR1 or 8CR6.	Check for continuity as follows: Terminals 86 to 63 (6CR1). Terminals 53 to 62 (8CR6).

7-7. Motor Starts, Bell Rings, but Doors Do Not Open After 5-Second Delay —Number 1 Motor Did Not Shift to 100-Percent Line Voltage (Run)— Pump Continued to Bypass and Pressure Relief Did Not Open

Probable cause	Possible remedy
Micro switch on motor timing relay did not operate.	With equipment energized, check voltage on microswitch terminals on timing relay in number 1 motor control cabinet. There should be no voltage across "Common" and "Normally Open" terminals. Voltage here indicates open contacts.
Faulty Microswitch	Disconnect wires from microswitch and operate manually. Check for continuity between "Common" and "Normally Open"; also "Common" and "Normally Closed."
Operating linkage out of adjustment.	Adjust operating linkage to operate the switch near the end of its stroke.
Timing relay out of adjustment (in number 1 motor control cabinet).	Adjust timer paragraph 3-92.

7-8. Number 1 Motor Starts and Shift to Run, but Number 1 Pump Continues to Bypass — Pressure Relief Valve Does Not Open (Applies to NE 5007 Power Units Only)

Probable cause	Possible remedy
Open circuit to SB valve	Check for voltage across SB coil. Terminals 44 to 29. If no voltage is indicated here, check voltage across the following contacts: Terminals 11 to 69 (1TR2). Terminals 44 to 44A (Launcher interlock). Terminals 69 to 44A (1MR2 contacts). Voltage at one of these points indicates open contacts. (Tests to be made with circuit energized.)
SB coil burned out	Check continuity through SB coil. Terminals 29 to 44 (disconnect coil at terminal 44 for this test).
SB valve not closing because of adjustment.	Adjust SB valve paragraph 3-103
SB not operating properly.	Disassembly and repair SB valve (par. 8-10).
S6 valve does not hold pressure or fails to remain closed. (Test: close hand valve between SA1 and tank).	Disassemble and repair S6 valve (par. 8-7).

7-9. Number 1 Motor Starts and Shifts to RUN but Number 1 Pump Continues to Bypass — Pressure Relief Valve Fails to Open (Does Not Apply to NE-5007 Power Units)

Probable cause	Possible remedy
Mechanical failure of SA1 valve.	Disassemble and repair SA1 valve (par. 8-15).

Probable cause	Possible remedy
SA1 valve out of adjustment.	Adjust valve (pars. 3-105, 3-110).
SA1 coil burned out	Check continuity through terminals 44 to 29 (disconnect coil at terminal 44 for this test).
Open circuit to SA1 valve coil.	Check for voltage to terminals 11 to 44. Voltage at these terminals would indicate an open contact in this circuit.
Elevator not on pedestals, preventing door operation (NE-50008, NE-50009, NE-50010 only).	Lower elevator to pedestals.

7-10. When Number 1 Motor Shifts to RUN Pressure Relief Valve Opens and Continues to Chatter

Probable cause	Possible remedy
S1A coil not energizing to shift 4-way valve.	Check for voltage across the coil. If no voltage is present, make continuity checks through the circuit to the coil.
S1A coil burned out	Check for continuity through coil (disconnect coil for this test).
Door 4-way valve not shifting because of dirty or defective pilot assembly.	Disassemble and repair S1A pilot valve assembly (par. 8-2).
Low control voltage. S1A coil will not overcome spring tension. (This is evidenced by vibrating pilot plunger. Coil will hold if assisted manually and doors will operate.)	Check to see that control voltage is a minimum of 110 volts at terminals 3L1 and 3L2. If control voltage is 110 volts or higher, and all other causes have been eliminated, the spring above the pilot spool may be shortened, but *not more than one spiral.*
S1A coil grounded	Disconnect coil and make insulation resistance test from coil leads to ground.
S5 valve not opening wide enough restricting flow to doors (applies to NE-5007 power units only).	Adjust S5 valve (par. 3-104).
S5 valve not opening due to mechanical failure (applies to NE-5007 power units only).	Disassemble and repair S5 valve (par. 8-11).
Drain lines clogged or closed off, not allowing 4-way valve to shift.	Make sure valves on drain lines are wide open and that lines are free of restriction.
Hand valves turned off	Open hand valves

7-11. Doors Begin Opening but one Linkage Does Not Break Over Center

Probable cause	Possible remedy
Flow control valves out of adjustment.	Adjust valves (par. 3-113).
Cup packing in cylinder faulty and bypassing pressure.	Break linkage over center manually to permit door opening. Stop doors halfway open and see that both doors do not drift open (indicates a ruptured or leaking cup). Doors may float (one opens while the other closes) but both doors must move.
Air in cylinders	Air bleed all cylinders
Pressure relief valve not properly adjusted.	Adjust valve (par. 8-36).
Number 1 pump failing	Test pump according to recommended procedure.

7-12. Doors Open but Number 1 Motor Continues to Run When Doors Reach Stop Pads

Probable cause	Possible remedy
5LS or 6LS did not operate.	Check for continuity between terminals 10 and 38. Continuity indicates that 5LS or 6LS has not operated.
Line 38 grounded	Disconnect wire 38 and test for insulation resistance between wire and ground.

Note. If line 3L1 is not installed as a neutral conductor, this probable cause does not apply.

7-13. Doors Open but Halt Before They Reach Door Stop Pads

Probable cause	Possible remedy
5LS and 6LS operate too soon.	Adjust limit switches 5LS and 6LS para 3-93.

7-14. Doors Open As Soon As Number 1 Motor Shifts to Run Without the 5-Second Warning-Delay Period

Probable cause	Possible remedy
1TR out of adjustment	Adjust 1TR paragraph 3-92.
Micro switch faulty or operating linkage out of adjustment (1TR2 relay).	See paragraph 11 for possible remedy.
2TR contact not opening	Shift selector switch to "Console" position. If number 1 motor starts, 2TR1 is not opening. (Microswitch on 2TR relay) Adjust operating linkage to insure that 2TR1 opens when 2TR is deenergized.
Faulty diaphragm assembly.	Replace faulty diaphragm assembly (par. 9-8).

7-15. Warning Bell Does Not Ring Before or During Door Opening

Probable cause	Possible remedy
Clapper on warning bell binding.	Free clapper.
1TR1 contacts not closing.	Disconnect lines No. 48 and No. 49 at 1TR and check continuity through the switch with relay energized.
Wiring on primary of bell transformer open.	Check continuity through the primary at terminals 200 to 201.
Wiring on secondary of bell transformer open.	Check continuity through the secondary at leads marked X.
Transformer grounded at primary or secondary.	With transformer disconnected check insulation resistance from leads to ground.

7-16. Warning Bell Starts Ringing After Doors Begin Opening

Probable cause	Possible remedy
Clapper on warning bell binding.	Free clapper.
Operating linkage on 1TR1 out of adjustment.	Adjust 1TR1 operating linkage (par. 3-92).

7-17. Warning Bell Continues Ringing After Doors are Fully Open and After Number 1 Motor Stops

Probable cause	Possible remedy
1TR1 contacts did not open when 1TR was deenergized.	Adjust 1TR1 operating linkage (par. 3-92).

DOORS CLOSE CIRCUIT

7-18. No Response When Doors Close Button Is Depressed

Probable cause	Possible remedy
Selector switch faulty	Check continuity through selector switch terminals 11 to 15 in control relay cabinet (selector switch in master position).
Circuit through push button is faulty.	Check continuity through DOORS CLOSE button, terminals 11 to 8 (with DOORS CLOSE button depressed) and the normally closed contacts of the DOORS OPEN button, terminals 8 and 9.
Circuit through STOP button is open.	Push STOP button and listen for relays 4CR and 10CR to pick up when button is released. If relays do not pick up, check for continuity through ELEVATOR STOP button, terminals 14 to 29 and continuity through Master Station STOP button, terminals 3L2 to 29 in control relay cabinet.
1LS and 2LS is operated position or circuit faulty through these limit switches.	Check continuity through 1LS and 2LS, terminals 23 to 39 in control relay cabinet.
Coil on 2CR burned out or has broken leads.	Check continuity through 2CR coil.
Circuit not complete through 22LS1.	Check continuity through 22LS1, terminals 9 to 23 in control relay cabinet.

7-19. Motor Starts but Does Not Shift to RUN When DOORS CLOSE Button Is Pressed

Probable cause	Possible remedy
See paragraph 7-7 for probable causes.	See paragraph 7-7 for possible remedies.

7-20. Motor Starts and Shifts to RUN but Number 1 Pump Continues to Bypass

Refer to paragraph 7-8 for probable causes and possible remedies.

7-21. Motor Starts and Shifts to RUN but Number 1 Pump Continues to Bypass — Pressure Relief Valve Does Not Open (Does Not Apply to NE-5007 Power Units)

Refer to paragraph 7-9 for the probable causes and possible remedies.

7-22. Motor Starts, Shifts to RUN, Pressure Relief Valve Opens and Continues to Chatter

Probable cause	Possible remedy
S1B coil grounded	Disconnect the coil and check insulation resistance from coil leads to ground.

Refer to paragraph 7-10 for further probable causes and possible remedies.

7-23. Doors Close, Number 1 Motor Stops, but One Linkage Did Not Lock Over Center

Probable cause	Possible remedy
Seal between doors not fastened down tightly.	Tighten down seal and replace any bolts that cannot be tightened.
Limit switches 1LS and 2LS out too far.	Reset 1LS and 2LS to stop number 1 motor after linkage has locked over center.
Cylinder rod length out of adjustment, causing piston to "bottom" on head end of cylinder before linkage locks over center.	Adjust rod length (par. 8-35).
See paragraph 7-11 for additional probable causes.	See paragraph 7-11 for additional possible remedies.

7-24. Doors Close but Number 1 Motor Continues to Run After Operating Linkages Are Locked Over Center

Probable cause	Possible remedy
1LS or 2LS did not operate.	Adjust *doors close* limit switches (par. 3-94).
Lines 9 or 23 grounded	Disconnect wires 9 and 23. Make insulation resistance test from these wires to ground.

Note. If line 3L1 was not installed as a neutral conductor, this cause does not apply.

7-25. When DOORS CLOSE or DOORS OPEN Button Is Pressed, Elevator Begins Rising

Probable cause	Possible remedy
(Applies to NE-5007 power units only)	
S6 valve fails to close tightly at the same time SA1 fails to open.	Adjust S6 and SA1 valves (pars. 3-102, 3-105, 3-110). Try door operation after S6 has been adjusted with hand valve between SA1 and tank closed. If elevator still rises, S6 will have to be disassembled, cleaned, and repaired (pars. 8-7 and 8-14).

7-26. Doors Are Slow Opening or Closing and Number 1 Pump Loads Up on Starting

Probable cause	Possible remedy
(Applies to NE-5007 power units only)	
S5 valve is restricting flow to the doors.	Disassemble and repair valve (par. 8-11).

7-27. Four-Way Pilot Assembly Chatters When Energized but Valve Shifts and Operates Satisfactorily

Probable cause	Possible remedy
Dirt, rust, or corrosion in air gap of solenoid assembly.	Disassemble and clean pilot valve assembly (par. 8-2).
Solenoid assembly defective.	Replace solenoid assembly (par. 8-2).

7-28. Circuit Relay Chatters or Hums Loudly When Energized

Probable cause	Possible remedy
Dirt, rust, or corrosion in air gap of solenoid assembly.	Disassemble and clean circuit relay (par. 9-7).
Faulty armature	Replace armature (par. 9-7).

"ELEVATOR UP" CIRCUIT

7-29. No Response When UP Button Is Depressed at the Master Station (3CR Does Not Pick Up)

Probable cause	Possible remedy
Selector switch or associated wiring is faulty.	Check continuity through the switch and wiring. (Selector switch in "Master" position.) Terminals 28 to 22 in control relay cabinet.

Probable cause	Possible remedy
Circuit through push buttons is faulty.	Check continuity as follows: Terminals 2 to 22 UP button-Master Station (UP button is depressed for test). Terminals 2 to 13. Terminals 13 to 6.
Faulty 4CR coil	Check continuity through 4CR coil.
4CR not picked up because locking bars are not retracted.	Retract locking bars by closing 5 CR relay manually with power on.
4CR contacts not closed	Check continuity through 4CR2 contacts. Terminals 6 to 84 (Equipment deenergized, 4CR operated manually).
Faulty 3CR coil	Check continuity through 3CR coil.

7-30. Number 1 Motor Does Not Start When Elevator Up Button Is Pressed—3CR, 4CR, and 10CR Relays are Operated

Probable cause	Possible remedy
Open circuit through normally closed contacts 6CR1, 17LS1, or 8CR6.	Check continuity as follows: Terminals — Contacts: 86 to 63 — 6CR1; 63 to 53 — 17LS1; 53 to 62 — 8CR6. Also check continuity through the normally closed contacts of the auxiliary relay.
Faulty micro switch or timing relay in motor control cabinet.	See paragraph 7-7.
Auxiliary relay energized (AR).	Reset overloads and depress STOP button.

7-31. No Response When UP Button Is Pressed on Master Station — (Doors Closed — Elevator on Pedestals) Elevator Operates Satisfactorily When Doors Are Open

Probable cause	Possible remedy
Circuit through 21LS open (21LS not depressed). (Applies to NE-5007, NE-50000, NE-50004, power units only.)	Check continuity through 21LS contacts.
Selector switch or wiring through selector switch faulty.	Check continuity through selector switch and wiring, terminals 25 to 22 at control relay cabinet.

7-32. No Response When UP Button Is Pressed at Elevator Station When Doors Are Open — Elevator Operates Properly From Master Control Station

Probable cause	Possible remedy
Selector switch or wiring at selector switch faulty.	Check continuity through elevator station UP button, elevator traveling cable and selector switch. Terminals 2 to 28 at control relay cabinet. (Elevator station UP button must be held in for this test.)

7-33. Number 1 Motor Starts but Does Not Shift to RUN; Continues to Bypass

Probable cause	Possible remedy
See paragraph 7-7 for probable causes.	See paragraph 7-7 for possible remedies.

7-34. Number 2 Motor Does Not Start and Elevator Rises on Number 1 Pump

Probable cause	Possible remedy
Circuit through 19 LS open.	Check continuity through 19LS contacts.
2TR2 contacts not closing.	With equipment energized, check voltage at microswitch terminals on 2TR. There should be no voltage across terminals 11 to 54. Voltage here indicates open contacts.
Faulty microswitch or 2TR relay.	Disconnect wires 11 and 54. Operate a switch manually while checking for proper operation with an ohmmeter.
2TR out of adjustment	Adjust timing relay (par. 3-92).
2TR coil burned out	Check continuity through 2TR coil.
Open circuit to 2TR at 3CR6 contacts.	Check voltage at 3CR6 contacts while 3CR is energized. Terminals 62 to 93 on 3CR relay. Voltage here indicates open contacts.
1CR5 contacts open	Check continuity through 1CR5 contacts. Terminals 55 to 70 on 1CR relay.

Probable cause	Possible remedy
Auxiliary relay contacts open.	Reset overloads, press STOP button; then check continuity across normally closed contacts of auxiliary relay in number 2 motor control cabinet.
Faulty microswitch on timing relay in number 2 motor control cabinet.	While equipment is energized (after all preceding tests have been made), check for voltage across normally closed and common terminals of the microswitch on timing relay in number 2 motor control cabinet. Voltage across these terminals indicates a faulty switch.

7-35. Number 2 Motor Starts But Does Not Shift to RUN and Continues to Bypass

Probable cause	Possible remedy
Microswitch on motor timing relay did not operate.	With equipment energized, check for voltage on microswitch terminals on timing relay in number 2 motor control cabinet. There should be no voltage across "Common" and "Normally Open" terminals. Voltage here indicates open contacts.
Faulty microswitch on timing relay in number 2 motor control cabinet.	Disconnect wires from microswitch and operate manually. Check for continuity between "Common" and "Normally Closed"; also "Common" and "Normally Open."
Microswitch operating linkage out of adjustment.	Adjust operating linkage to operate the switch near the end of its stroke.
Timing relay out of adjustment (in number 2 motor control cabinet).	Adjust timing relay (par. 3-92).

7-36. Number 1 Motor Starts and Shifts to RUN but Number 1 Pump Continues to Bypass

Probable cause	Possible remedy
S5 or SA1 valve not adjusted properly. (applies to NE-5007 power units only.)	Adjust S5 and SA1 valves (par. 3-104, 3-105, 3-110).
S5, S6, SA1 coils not energizing. (Applies to NE-5007 power units only.)	Check for voltage between terminals 40 to 29. If no voltage is present here, check for voltage across these terminals in the following order: 87 to 88 (1CR4 contacts) 88 to 68 (2CR4 contacts) 68 to 67 (1MR1 contacts) 67 to 40 (6CR4 contacts) Voltage across any of the above contacts indicates open circuit at this point. (This test must be made with elevator UP circuit energized.)
S5 coil burned out or open. (Applies to NE-5007 power units only.)	Check continuity through S5 coil. (This must be done at the valve by disconnecting the coil.)
Mechanical failure in S5. (Applies to NE-5007 power units only.)	Disassemble and repair S5 valve (par. 8-11).
SA1 coil burned out or open. (Does not apply to NE-5007 power units.)	Check continuity through SA1 coil. (This must be done by disconnecting the coil at the valve.)
Mechanical failure in SA1 valve. (Does not apply to NE-5007 power units.)	Disassemble and repair SA1 valve (par. 8-15).
Pump failure. Pump will not put out enough pressure to operate elevator.	Replace faulty pump (par. 8-1).

7-37. Number 1 Motor Starts and Pump Bypasses, but When it Shifts to RUN, Pressure Relief Valve Opens and Continues to Chatter

Probable cause	Possible remedy
Mechanical failure of S6 valve.	Disassemble and repair S6 valve (pars. 3-102 and 3-104).
S6 valve not adjusted properly (NE-5007 power units only).	Adjust S6 valve (pars. 3-102 and 3-104).
Burned out or open coil on S6 valve.	Check continuity through S6 coil.

7-38. Pressure Relief Valve Chatters for Several Seconds Only

Probable cause	Possible remedy
S5 closing before S6 opens. (Applies to NE-5007 power unit only.)	Adjust S5 and S6 valves (pars. 3-102 and 3-104).

7-39. Number 2 Motor Starts as Soon as UP Button Is Activated (No Two-Second Delay)

Probable cause	Possible remedy
Timing relay 2TR out of adjustment.	Adjust timing relay (par. 3-92).
Faulty microswitch on 2TR relay.	See paragraph 7-34 for possible remedy.
Defective diaphragm or check valve in timing relay in number 2 motor control cabinet.	Replace defective diaphragm assembly (par. 9-8).

7-40. Motor Number 2 Starts at Full Line Voltage

Probable cause	Possible remedy
Timing relay in number 2 motor control cabinet closes with no time delay.	Adjust timing relay (par. 3-92).
Faulty microswitch on timing relay in number 2 motor cabinet.	See paragraph 7-34 for possible remedy.
Defective diaphragm or check valve in timing relay in number motor control cabinet.	Replace faulty diaphragm assembly (par. 9-8).

7-41. Number 1 Motor Starts at Full Line Voltage

Probable cause	Possible remedy
Timing relay in number 1 motor control cabinet closes with no time delay.	Adjust timing relay (par. 3-92).
Faulty microswitch on timing relay in number 1 motor control cabinet.	See paragraph 7-34 for possible remedy.
Defective diaphragm or check valve in timing relay in number 1 motor control cabinet.	Replace defective diaphragm assembly (par. 9-8).

7-42. Number 2 Motor Does Not Come Up to Speed Until Elevator Rises Several Feet

Probable cause	Possible remedy
Bypass valve not opening fast enough (SA2) (NE-5007 power units only.)	Adjust SA2 valve (pars. 3-105 and 3-110).
Mechanical failure of SA2 valve.	Disassemble and repair SA2 valve (pars. 8-8 and 8-15).

7-43. When Number 2 Motor Shifts to RUN, Elevator Gains Only Little Speed

Probable cause	Possible remedy
SA2 valve has not closed tightly or closes too slowly.	Adjust SA2 valve (pars. 3-105 and 3-110).
Ruptured disc in SA2 valve.	Disassemble and repair SA2 valve (pars. 8-8 and 8-15).

7-44. Time Required for Elevator Up Operation Exceeds 32 Seconds, (Timing on Motors Is Correct)

Probable cause	Possible remedy
SA2 or SA1 valve has not closed tightly or closes too slowly.	Adjust SA1 and SA2 valves (pars. 3-105 and 3-110).
Ruptured disc in SA1 or SA2 valve.	Disassemble and repair valves (pars. 8-8 and 8-15).
SA1 and/or S5 valve not closing tightly or closing too slowly (NE-5007 power units only).	Adjust SA1 and S5 valves (pars. 3-104, 3-105, and 3-110).
Ruptured disc in SA1 and/or S5 valve (NE-5007 power units only).	Disassemble and repair in SA1 valve (pars. 8-8 and 8-15) or S5 valve (par .8-11).
S6 valve restricting flow and number 1 pump bypassing through relief valve (NE-5007 power units only).	Adjust S6 valve (par. 3-102).

7-45. Elevator Rises to Intermediate Level and Stops

Probable cause	Possible remedy
Applies to NE-5007, NE-50000, and NE-50004 power units only). Selector switch or associated wiring faulty.	Check continuity in contro relay cabinet. Terminals 28 to 22 (Master station; selector switch in "Master" position).
5LS2 or 6LS2 not operated.	Check continuity through 5LS2 and 6LS2, terminals 11 to 66.
10CR coil burned out or has broken leads.	Check continuity through 10CR coil.

Note. If elevator will operate properly from Elevat Control Station, the last two probable causes above not apply.

7-46. Elevator Rises but Stops at a Point 5 to 10 Feet Above Floor Level

Probable cause	Possible remedy
Break in cable to Elevator Control Station.	Check continuity through cable lines 13-2-26-22.

7-47. Elevator Lowers but Stops at a Point 5 to 10 Feet Above Floor Level

Probable cause	Possible remedy
Break in cable to Elevator Control Station.	Check continuity through cable lines 12-4-26.

7-48. When Number 2 Motor Is Deenergized (19LS Contacted), Elevator Stops Rising — Number 1 Motor Continues to Run

Probable cause	Possible remedy
S5 or SA1 valve has not closed tightly or closes too slowly. (Applies to NE-5007 power units only.)	Adjust S5 and SA1 valve (pars. 3-104, 3-105, and 3-110). valve (par. 8-11) or
Ruptured disc in S5 or SA1 valve. (Applies to NE-5007 power units only.)	Disassemble and repair S5 valve (par. 8-11) or SA1 valve (par. 8-8).
Failure of check valve at number 2 pump.	Close the hand valve in the number 2 pump bypass line. If the check valve is faulty, number 2 pump will run backward. Repair faulty check valve (par. 8-26).
Mechanical failure of S6 Valve.	Disassemble and repair S6 valve (pars. 8-7 and 8-14).
Burned out or open coil on S6 valve.	Check continuity through S6 coil. (This must be done at the valve by disconnecting the coil.)
Pump failure, Number 1 pump will not put out enough pressure to operate the elevator.	If all other possible causes have been checked and eliminated, check for pump failure.
Open circuit to S5, S6, SA1 valve. (Applies to NE-5007 power units only.)	With the circuit energized, check voltage across terminals 87-40. Points 87-88, 88-68, 68-67, 67-40 should be checked if no voltage is present from 87-40. Voltage at any of these points indicates open contacts.

7-49. Elevator Rises Above Locking Bars but Bars Do not Engage

Probable cause	Possible remedy
17LS2 contacts open—17LS did not operate properly.	Check continuity through 17LS2 contacts, terminals 41 to 52.
3CR4 contacts open. Contacts broken or out of place.	Check continuity across 3CR4 contacts, terminals 11 to 52. (Equipment deenergized, contactor held in manually.)
S2A coil burned out or open.	Check for continuity through S2A coil, terminals 42 to 29. Disconnect at terminal 42 for this test.
Four-way valve not shifting because of dirt in the pilot assembly. O-ring seal on pilot spool may be displaced, binding the spool.	Remove, disassemble, and clean S2A pilot valve assembly (par. 8-3).
Coil grounded	Disconnect S2A coil and make insulation resistance test.
Low control voltage-coil will not overcome spring tension. (This is evidenced by vibrating pilot plunger.)	Check that control voltage is a minimum of 110 volts at terminals 3L1 and 3L2 during elevator operation. If Control voltage is 110 volts or higher, and all other causes have been eliminated, the spring above the pilot spool may be shortened *not more than one spiral.*
Drain line clogged or closed off preventing valve from shifting.	Free drain lines of any restriction.
Hand valves in hydraulic lines closed.	Open valves.
Flow control valve restricting flow (NE-5007 power units only).	Check that flow control valve adjusting screw is turned in as far as it will go (clockwise).

7-50. Locking Bars Engage but Elevator Does Not Level

Probable cause	Possible remedy
All locking bar engage limit switches did not operate to drop out 4CR.	Check continuity through terminals 11 to 47. Continuity here indicates that 1 or more limit switches did not operate.
Open circuit to S3 valve	Check continuity through circuit as follows: Terminals 11 to 5 (pressure switch). Terminals 5 to 1 (4CR1 contacts).

Probable cause	Possible remedy
	Terminals 1 to 92 (3CR5 contacts). Terminals 92 to 46 (5CR6 contacts).
S3 coil burned out	Check continuity through coil.
S3 valve not adjusted properly.	Adjust valve (par. 3-106).
Mechanical failure in S3 valve.	Disassemble and repair the valve (pars. 8-16 and 8-9).

7-51. Number 2 Motor Does Not Stop When Elevator Nears Locking Bars

Probable cause	Possible remedy
Limit switch 19LS is not operating when it contacts its cam.	Adjust switch (par. 3-99).
Wiring to 19LS grounded, holding number 2 motor circuit energized.	Disconnect wires to 19LS at control cabinet and make insulation resistance test.

Note. If line 3L1 was not installed as a neutral conductor, cause above does not apply.

7-52. Elevator Rises Above Locking Bars, Bars Engage but Number 1 Pump Continues to Run — Elevator Does Not Level

Probable cause	Possible remedy
Ground on line 40 or 53 holding, number 1 motor circuit energized.	Disconnect lines 40 and 53 and make insulation resistance test.

Note. If line 3L1 was not installed as a neutral conductor, this cause does not apply.

7-53. Number 1 Motor Does Not Stop When Elevator Is Above Locking Bars — Bars Do Not Engage

Probable cause	Possible remedy
Limit switch 17LS is not operating when it contacts its cam.	Adjust limit switch 17LS (par. 3-99).

7-54. Elevator Levels Before Locking Bars Are Fully Engaged

Probable cause	Possible remedy
Locking bar engage limit switches not adjusted properly.	Adjust limit switches (pars. 3-95 and 3-96).

ELEVATOR DOWN CIRCUIT

7-55. No Response When DOWN Button Is Pressed

Probable cause	Possible remedy
Selector switch or associated wiring faulty.	Check continuity through switch and wiring. Terminals 11 to 15 (Selector switch in MASTER position) at cabinet. Terminals 28 to 26 (Selector switch in ELEVATOR position) at cabinet.
Circuit through push buttons is faulty.	Check continuity at relay cabinet as follows: Terminals 15 to 4 (Master UP button). Button depressed for test. Terminals 26 to 4 (Elevator UP button). Button depressed for test. Terminals 4 to 12 (Elevator *DOWN* button). Terminals 12 to 12A (Master "Down" button). Terminal 3L2 to 14 (Master "Down" button). Terminals 14 to 29 (Elevator STOP).
18LS1 contacts not closed.	Limit switch 18LS is operated or stuck in the operated position.
5CR coil burned out or has broken leads.	Check continuity through 5CR coil.

7-56. 5CR Picks Up but Number 1 Motor Does Not Start

Probable cause	Possible remedy
Limit switch 17LS remains operated.	Adjust limit switch 17LS (par. 3-99).
Open circuit to number 1 motor.	Check continuity as follows: Terminals 11 to 86 5CR3 contacts (5CR operated manually). Terminals 86 to 63 6CR1 contacts. Terminals 53 to 62 8CR6 contacts. Also check continuity through the normally closed contacts of the auxiliary relay.
Faulty microswitch on timing relay in number 1 motor control cabinet.	See paragraph 7-7 for possible remedy.

7-57. Elevator Rises Above Locking Bars but Bars Do Not Retract

Probable cause	Possible remedy
Shutoff valves in hydraulic lines closed.	Open shutoff valves (par. 3-104).
Flow control valve restricting flow (NE-5007 power units only).	Readjust locking bar flow control valve.

Probable cause	Possible remedy
5CR or 6CR2 contacts open.	With DOWN circuit energized, check for voltage across the S2B coil. Terminals 43 to 29. If no voltage is present here (43 to 29), check for voltage as follows: Terminals 11 to 64 (5CR4 contacts). Terminals 64 to 43 (6CR2 contacts). Voltage at any of these points indicates open contacts.
S2B coil burned out or open.	Check for continuity through S2B coil.
Four-way valve not shifting because of dirt in pilot assembly. O-ring seal on pilot spool may be displaced, binding the spool.	Remove, disassemble, and clean S2B pilot valve assembly (par. 8-3).
S2B coil grounded	Disconnect S2B coil and make insulation resistance test.
See paragraph 7-49 for additional probable causes.	See paragraph 7-49 for additional possible remedies.

7-58. Elevator Rises Above Locking Bars, Bars Retract; Elevator Does Not Lower

Probable cause	Possible remedy
One of locking bar retract limit switches did not operate.	Readjust the locking bar retract limit switches (par. 3-95).
6CR relay coil burned out.	Check continuity through 6CR coil, Terminals 51 to 29. (Disconnect Terminal 51 and test at the coil.)
6CR contacts did not close.	If 6CR relay is closed, check for voltage across 6CR3 contacts, terminals 11 to 45. Voltage across these terminals indicates open contacts.

7-59. Elevator Lowers Very Slowly

Probable cause	Possible remedy
S4 valve not opening because of faulty coil.	Check for continuity through the S4 solenoid coil, terminals 45 to 29. (Disconnect the coil at terminals 45 for this test.)
Mechanical failure in S4 valve.	Disassemble and repair S4 valve (pars 8-6 and 8-13).
S4 valve out of adjustment.	Adjust S4 valve (pars. 3-107 and 3-108).

7-60. Elevator Lowers Very Rapidly — Does Not Level to Pedestals and Slams Hard on Pedestal Jacks

Probable cause	Possible remedy
Dirt S4 pilot orifice (NE-5007 power units only).	Disassemble, clean, and repair S4 valve (par. 8-6).
18LS not operating when elevator nears pedestals.	Adjust limit switch 18LS (par. 3-97).

7-61. Elevator Will Not Level to Floor When Stop Button Is Momentarily Pressed in Leveling Zone (Not Applicable to Elevators That Are Operational With Hercules Equipment)

Probable cause	Possible remedy
20LS not being operated in leveling zone.	Operate switch manually to see if it is operating properly. Adjust 20LS switch (par. 3-98).
Mechanical failure in S3 valve.	Disassemble and repair S3 valve (pars. 8-9 and 8-16).
Faulty S3 coil	Check continuity through S3 coil.

Note. If elevator platform will level onto locking bars or pedestals, the S3 valve is not at fault.

7-62. Elevator Lowers 6 Inches or More When STOP Button Is Pressed

Probable cause	Possible remedy
S3 valve closing too slowly (NE-5007 power units only).	Adjust S3 valve (pars. 3-106 and 3-109).
Lowering valve S4 closes too slowly.	Adjust S4 valve (pars. 3-107 and 3-108).

7-63. Number 1 Motor Starts but Does Not Shift to RUN; Continues to Bypass

Probable cause	Possible remedy
See paragraph 7-7 for probable causes.	See paragraph 7-7 for possible remedies.

7-64. Number 1 Motor Starts and Shifts to RUN but Number 1 Pump Continues to Bypass

Probable cause	Possible remedy
See paragraph 7-36 for probable causes.	See paragraph 7-36 for possible remedies.

(8) *Door cylinder.*

Bore ..... 5 in.
Stroke ..... 21-7/8 in. closed
Length, center-to-center ..... 33-3/8 in. closed, 57-1/4 in. closed
Inlet and outlet openings ..... 3/4 in. NPT (National Pipe Thread)

(9) *Locking bar cylinder.*

Bore ..... 2-1/2 in.
Stroke ..... 3-3/8 in.
Length, center-to-center ..... 12-11/32 in. closed, 16-1/32 in. fully extended
Inlet and outlet openings ..... 1/2 in. NPT

(10) *Main cylinder Type B, C, B-4, B-5, D.*

Piston diameter ..... 13-3/4 in.
Piston length ..... 19 ft. (feet) 10-1/2 in.
Cylinder bore ..... 15-1/4 in.
Cylinder length ..... 19 ft. 5-1/2 in.

(11) *Solenoid valves (Atkomatic) (Power unit NE-5007 only).*

Manufacturer ..... Atkomatic Valve Co.
Sizes ..... 1, 1-1/2, 2-1/2, and 3 in.
Liquid medium ..... Hydraulic fluid
Maximum pressure ..... 350 psi
Type ..... FEP
Volts 120-V
Cycle 60

(12) *Solenoid valves (ASCO).*

(*a*) *Power unit NE-50000.*

Manufacturer ..... Automatic Switch Co.
Sizes ..... 1, 2-1/2, and 3 in.
Liquid medium ..... Hydraulic fluid
Maximum pressure ..... 350 psi
Volts 120-V
Cycles 60

(*b*) *Power units NE-50004, NE-50008, NE-50009, NE-50010, NE-50012.*

Manufacturer ..... Automatic Switch Co.
Sizes ..... 1, 2-1/2, and 3 in.
Liquid medium ..... Hydraulic fluid
Volts 120-V
Cycles 60

(13) *Locking bar four-way valve.*

Manufacturer ..... Double A Products Co.
Model PGA-2175-CK3

(14) *Locking bar flow control valve (NE-5007 power unit only).*

Manufacturer ..... Double A Products Co.
Model YB-175-K3

(15) *Four-way door operating valves.*

Manufacturer ..... Double A Products Co.
Model PGS-190-CK3

(16) *Door cylinders flow control valve.*

Manufacturer ..... Hydraulic Press Manufacturing Co.
Model S-2320-1
Pressure ..... 2000 psi

(17) *Pressure switch, Square D Co. (NE-5007 power unit only).*

Manufacturer ..... Square D Co.
Class 9012
Type FHG2
Range ..... 30-440-lb.
Differential pressure ..... 1060 lb.
Alternating current ..... 1 hp (horsepower)
Direct current ..... 1/2 hp

(18) *Pressure switch, Penn Controls*

Manufacturer ..... Penn Controls
Type: (NE-50008, -50009, 50010) (NE-50012). 277BP20NA 277MP20HA
Maximum pressure ..... 535 psi
Range ..... 50 to 240 psi
Differential pressure ..... 20 to 100 psi
Volts ..... 115-V (normally open)

(19) *Motor control cabinet.*

Manufacturer ..... Cutler-Hammer
Amperes 40
Volts 440
HP 30
Cycles 60

(20) *Timing relays.*

Manufacturer ..... Cutler-Hammer
Model 10337H121C
Volts ..... 600-V AC maximum

(21) *Limit switches.* All limit switches used on the elevator are tabulated in table 1-2 which describes the function and purpose of the switches.

Table 1-2. Elevator Limit Switches

Limit switch	Function
1LS, 2LS	These switches are on opposite doors and are electrically connected in parallel to allow both doors to open. These switches also function to terminate a DOORS CLOSE sequency.
5LS, 6LS	These switches are mounted on opposite doors. They function to terminate a DOORS OPEN sequence. One set of

7-65. Number 1 Motor Starts and Pump Bypasses; but When it Shifts to RUN, Pressure Relief Valve Opens and Continues to Chatter

Probable cause	Possible remedy
See paragraph 7-37 for probable causes.	See paragraph 3-37 for possible remedies.

7-66. Pressure Relief Valve Chatters for Seconds Only

Probable cause	Possible remedy
See paragraph 7-29 for probable cause.	See paragraph 7-29 for possible remedies.

7-67. Elevator Rises When DOWN Button Is Pressed

Probable cause	Possible remedy
Locking bar extended caused by air in locking bar system.	Air bleed system (pars. 3-95 and 3-96).
Cups in locking bar cylinder by passing oil.	Repair or replace locking bar cyclinder (par. 8-34).
All locking bar retract limit switches not operating.	Adjust locking bar retract limit switches (par. 3-95).

7-68. Elevator Begins Lowering Before All Locking Bars Have Retracted — Platform Lowers Onto Bars That Have Not Retracted

Probable cause	Possible remedy
Locking bar retract limit switches not properly adjusted.	Adjust switches (par. 3-95).

"CONSOLE UP" OPERATION

Note. All malfunctions listed in DOORS OPEN CIRCUIT and ELEVATOR UP CIRCUIT apply to CONSOLE UP operation. The few malfunctions listed here are peculiar to CONSOLE operation alone where coupling two operations automatically occurs.

7-69. Doors Open Completely and Elevator Begins to Rise — Pressure Relief Valve on Number 1 Pump Opens and Continues to Chatter

Probable cause	Possible remedy
S6 valve—mechanical failure.	Disassemble and repair S6 valve (pars. 8-7 and 8-14).
Swing check valve sticking closed.	Repair swing check valve (par. 8-26).
Faulty or grounded coil on S6 valve.	Check continuity through S6 valve coil (at the coil). Disconnect the valve coil and make an insulation resistance test.

7-70. When the Doors Reach the Fully Open Position, the Number 1 Motor Stops for an Instant, and Then Starts Again

Probable cause	Possible remedy
2TR1 contacts are not holding the number 1 motor circuit energized between the time 1CR drops out and 3CR picks up.	Adjust 2TR1 operating linkage (par. 3-92).
Faulty microswitch	Disconnect lines 17 and 86 and operate microswitch manually while checking for proper operation with an ohmmeter.
Faulty 2TR coil	Check continuity through 2TR coil.
7CR6 contacts not closed	Check for continuity across 7CR6 contacts (circuit energized), terminals 62 to 93.

7-71. Elevator Rises Above locking Bars, Bars Engage and Elevator Levels — as Soon as It Touches the Bars, It Rises Again, Reaches the Top of Its Stroke and Again Levels — This Continues Until the Launcher Reaches the Fully Erected Position

Probable cause	Possible remedy
2TR1 contacts do not open when 2TR is de-energized.	Readjust 2TR1 operating linkage (par. 3-92).

7-72. Launcher Begins Erecting Before the Doors Are Completely Open

Probable cause	Possible remedy
Launcher interlock with doors wired incorrectly	Check that the following connections correspond: terminal 30 and Douglas conductor 1087D, terminal 31 and Douglas conductor 1088B.

7-73. Launcher Does Not Stop Erecting When STOP Button Is Pressed and Held

Probable cause	Possible remedy
Launcher interlock with doors wired incorrectly.	Check that the following connections correspond: terminal 30 and Douglas conductor 1087D, terminal 31 and Douglas conductor 1088B.

Probable cause	Possible remedy
Short circuit in wiring between launcher and elevator control cabinet.	Disconnect wiring to launcher at elevator control cabinet. Check out wiring and replace if faulty.
10CR contacts not opening when circuit relay is de-energized.	Disconnect wires at terminals 30 and 31. Check continuity at these terminals. (There should be no continuity at these points.)

7-74. No Response When Launcher Elevation Switch Is Moved to UP Position

Probable cause	Possible remedy
Open contacts in control circuit.	See that the following is accomplished: Selector switch at master control station on "Console". 400 cycle power supply is on. D.C. power to launcher is on. Launcher rail limit switches closed (two switches).
Selector switch or wiring faulty.	Check continuity through switch and wiring at cabinet terminals 17 to 17A.

7-75. Number 1 Motor Starts and Elevator Begins Rising as Soon as Selector Switch Is Moved to CONSOLE Position (Doors Remain Closed and Elevator Cntinues to Rise)

Probable cause	Possible remedy
See paragraph 7-71 for probable causes.	See paragraph 7-71 for possible remedies.

"CONSOLE DOWN" OPERATION

7-76. Elevator Rises Off Locking Bars, Locking Bars Retract and Elevator Lowers but Number 1 Motor Stops for an Instant as Elevator Nears Pedestals, Then Restarts

Probable cause	Possible remedy
Limit switch 18LS operated before limit switch 21LS operated.	Adjust switches so that 21LS operates before 18LS when elevator is lowering.

7-77. Doors Begin Closing Before Launcher Reaches Horizontal Position

Probable cause	Possible remedy
Jumper wire between launcher limit switch terminals in control relay cabinet was not removed after launcher installation.	Remove jumper wire. Terminals 44 and 44A (NE-5007 power units). 44A and 69 (NE-50000 and 50009 power units). 44A and 69A (NE-50008, 50009, and 50010 power units).
Launcher limit switch incorrectly connected in relay control cabinet.	Refer to wiring diagram for correct wiring to elevator control system.
Launcher limit switch stuck in operated position.	Loosen switch and lubricate in accordance with current lubrication order.

7-78. Launcher Does Not Stop Lowering When STOP Button Is Pressed and Held

Probable cause	Possible remedy
See paragraph 7-73 for probable causes.	See paragraph 7-73 for possible remedies.

7-79. No Response When Launcher Elevation Switch Is Moved to DOWN Position

Probable cause	Possible remedy
See paragraph 7-74 for probable causes.	See paragraph 7-74 for possible remedies.

MAGNETIC CIRCUIT RELAYS

7-80. Contacts Will Not Operate; Remain in Their Normal Position or Make No Contact at All

Probable cause	Possible remedy
Contacts or spring plate out of place.	Remove movable contact and inspect defects in all components. Reinstall making sure contacts make and break properly before installing cover (par. 9-7).
Insulating cover installed incorrectly.	Be sure cover is under latches and pushed back far enough to slip into plate.
Contact bar pin not engaging armature lever.	Operate relay manually to be sure pin engages armature lever correctly and relays operate freely.

Probable cause	Possible remedy
	and test (par. 9-12). Investigate conduit and fittings to determine where water entered the system. Take necessary measures to make the electrical conduit watertight.
Wires to limit switches "grounded" or "shorted." Usually caused when flexible conduit comes out of its fitting and cuts through the insulation on the conductors.	Reinsulate wires. Replace any wiring that has been nicked or weakened. Install flexible conduit in fitting and tighten securely.

ATKOMATIC TWO-WAY SOLENOID VALVES

7-90. Erratic Valve Action (Speed of Opening and Closing Inconsistent)

Probable cause	Possible remedy
Loose disc screw	Tighten securely.
Dirt in valve	Disassemble and clean thoroughly (par. 8-6).
Piston ring openings alined, allowing pressure to bypass.	Upon reassembly of valve, make sure the piston ring openings are staggered about the circumference and work freely in their grooves.
Armature binding on shaft of pilot valve assembly.	Be sure the armature (sliding, fluted metal slug) slides freely on pilot valve assembly.

7-91. Valve Adjustment Very Critical

Probable cause	Possible remedy
Peened pilot valve seat screw.	Replace with stainless steel pilot valve seat screw (par. 8-6).
Piston ring openings alined, allowing pressure to bypass.	Upon reassembly of valve, make sure the piston ring openings are staggered about the circumference and work freely in their grooves.

7-92. Valve Will Not Open

Probable cause	Possible remedy
Cap on pilot valve assembly broken off (normally closed valves only).	Replace pilot valve assembly (par. 8-6).
Armature binding on shaft of pilot valve assembly.	Replace pilot valve assembly (par. 8-6).
Pilot adjustable orifice open too wide (beyond operating range of valve).	Adjust valve (par. 3-105).
Piston rings worn or defective allowing pressure to bypass.	Replace piston rings (par. 8-6).

7-93. Valve Will Not Close

Probable cause	Possible remedy
Bent pilot valve assembly (normally open valves only).	Replace seat screw with stainless steel type and replace pilot valve assembly (par. 8-8).
Bent pilot valve spring (normally open valves only).	Replace spring. Be sure the spring is installed over the guides of the seat screw when reassembling valve (par. 8-8).
Guides on stainless steel seat screw bent.	Replace seat screw.
Bent housing on cylinder cap.	Straighten if possible or replace cylinder cap.

7-94. Valve Will Not Hold Pressure

Probable cause	Possible remedy
Ruptured disc	Replace disc.
Faulty seat screw or damaged pilot valve assembly.	Disassemble and repair valve (par. 8-6).

7-95. Valve Cannot Be Adjusted to Open Wide Enough; Even When Adjusting Screw Is Seated

Probable cause	Possible remedy
Adjusting screw is not closing orifice in valve body.	Replace pilot adjusting screw.
Dirt in pilot orifices preventing the pilot assembly from seating properly in the seat screw.	Disassemble the valve and clean thoroughly (par. 8-6).

7-96. Valve Does Not Shift When Energized (Pressure Relief Valve Opens in Case of Door Operation)

Probable cause	Possible remedy
Dirt in pilot assembly	Remove pilot assembly. Disassemble and clean thoroughly (pars. 8-2 and 8-3).
Displaced O-ring on pilot spool.	Replace O-ring (pars. 8-2 and 8-3).
Coil grounded	Disconnect coil at terminal block in control relay cabinet and make insulation resistance test from wire to ground:

Coil	Terminal
S1A	38A
S1B	39A
S2A	42
S2B	43

Probable cause	Possible remedy
Low control voltage	Check that control voltage is a minimum of 110 volts at terminals 3L1 and 3L2 in control relay cabinet.
Drain lines clogged	Free drain lines of any restrictions.
Coil will not overcome pilot valve spring tension.	See paragraph 7-49 for possible remedy.

7-97. Oil Leaks From Solenoid Housing

Probable cause	Possible remedy
Faulty O-ring on pilot spool.	Remove pilot assembly, disassemble, clean, and flush. Replace O-ring, reassemble, and test (pars. 8-2 and 8-3).

Section III. REMOVAL AND INSTALLATION OF MAJOR COMPONENTS

7-98. Servicing the Hydraulic System

a. Draining.

(1) Raise the elevator to a level approximately 7 feet below the door level (par. 2-10).

Warning: **To prevent injury to personnel or damage to the equipment, block the doors with suitable blocking material.**

(2) Close the 3-inch main cylinder shutoff valve.

(3) Attach drain lines to the door drain valves (7 and 8, fig. 3-26). Open the valves and drain the hydraulic fluid into a suitable container.

(4) Attach drain lines to the lcoking bar drain valves. Open valves and drain the hydraulic fluid into a suitable container.

(5) Close the 3-inch main cylinder shutoff valve (fig. 3-20).

(6) Lower the elevator to the leveling pedestals (par. 2-10).

Note. If other than D type elevator, block the elevator platform to permit access to the main cylinder.

(7) Attach a drain line to the reservoir drain valve (6, fig. 3-24), and drain the hydraulic fluid from the reservoir into a suitable container.

(8) Remove, disassemble, and clean the sediment strainers (par. 8-29).

(9) Remove, disassemble and clean the line strainer (par. 8-33).

(10) Prepare a bath of 10 to 15 gallons of water in a nongalvanized container, using one-half pound sodium hydroxide for each gallon of water. Maintain the solution at a temperature of 180° F. (Fahrenheit). Immerse all parts of the sediment strainers and the line strainer in this solution for about 20 minutes or until the evolution of gas has stopped. Remove all parts from the solution. Wash the parts with fresh water and dry thoroughly.

Note. Perform this step only when replacing the OHC hydraulic oil in the hydraulic system with HFC hydraulic fluid. Use gloves and face mask for safety when mixing solution.

Note. All galvanized piping in the hydraulic system must be replaced with black iron pipe before using HFC hydraulic fluid in the system.

(11) Attach drain line to the 1-inch main. cylinder flushing valve (9, fig. 3-26). Open the valve and pump the remaining fluid from the cylinder.

Note. Some main cylinders do not have a flushing valve. In this case, remove the one-half inch plug from the side of the main cylinder and install a suitable one-half inch valve.

b. Filling.

(1) Reassemble and install the line strainer (par. 8-33).

(2) Reassemble and install the sediment strainers (par. 8-29).

(3) Close the 3-inch main cylinder shutoff valve, main cylinder flushing valve, door drain valves (7 and 8, fig. 3-26), locking bar drain valves, and reservoir drain vlave (6, fig. 3-24).

(4) Fill the reservoir with hydraulic fluid.

(5) Bleed the main cylinder, locking bar cylinders, and door cylinders. Make necessary adjustments to valves while operating the elevator.

c. *Flushing.*

(1) Attach a drain line to the main cylinder flushing valve, or to the one-half inch valve installed for draining if the cylinder does not have a flushing valve. Open the 3-inch main cylinder shutoff valve slightly and allow the hydraulic fluid to float the used hydraulic oil or fluid from the cylinder into a suitable container.

Note. There should be approximately 45 gallons of oil or fluid floated from the cylinder.

(2) Remove the access cover plate (18) from the reservoir (16) and check for foreign material in the hydraulic fluid.

Note. If replacing the OHC hydraulic oil with the HFC hydraulic fluid, skim the oil from top of fluid at this time. Oil and fluid will not mix.

(3) After 8 days of operation, the elevator should not be used for a 24-hour period. Repeat (2) above, at this time.

(4) Operate the elevator through six cycles and allow to remain stationary for several hours. If foreign matter appears, rerun the hydraulic fluid through the filter.

(5) Check the hydraulic fluid level in the reservoir and service as required.

(6) Operate the elevator several times to mix the fluid. Drain a 1-pint sample at the sight gage (17) and forward sample for analysis to Laboratory Branch, Petroleum Division, Schenectady Army Depot, Schenectady, N.Y., 12306, Symbol SSMSC-DST-E.

Note. Perform this step only when replacing OHC hydraulic oil with HFC hydraulic fluid.

(7) After forwarding the above sample, mix two ounces of Pontamine Red Dye in three gallons of hydraulic fluid and add this to hydraulic system.

Note. Leaks in the hydraulic system are more easily detected and the sight glass is more easily read when the dye is added to the system.

7-99. Power Unit

a. *Removal.*

(1) Place the elevator platform on pedestals. Doors in open position.

(2) Turn off main power switch, deenergizing unit.

(3) Shut off gate valves (1, 2, 3, 4, and 5, fig. 3-26) to door cylinder and locking bar piping.

(4) Drain hydraulic fluid by connecting a 1-inch hose. Drain fluid at drain valve (6, fig. 3-24) into clean container.

(5) Loosen 3-inch manifold union (14, fig. 3-26) on pipe line to main cylinder. Provide a clean container to hold drainage fluid.

(6) Loosen union in vent pipe (2, fig. 3-24) on power unit.

Note. On some power units, a union in the power unit vent line was not installed necessitating cutting the pipe.

(7) Loosen 1 1/2-inch unions (6, fig. 3-26) on door cylinder piping at 4-way valve.

(8) Loosen 3/4-inch unions (3) on locking bar cylinder piping at 4-way valve.

(9) Disconnect the following electrical wiring:

(*a*) Wiring to motor number 1 (44, fig. 7-1) and number 2 (66) at motor terminals. Disconnect flexible conduit at motor junction boxes.

Note. Figure 7-1, which illustrates power units NE-50000, NE-50004, and NE-50008, is used as a typical reference. Power unit NE-5007 (fig. 7-4) contains, in addition, an S5 and an SB valve. Power units NE-50009 (fig. 7-2) and power unit 50010 (fig. 7-3) contain an S7 valve.

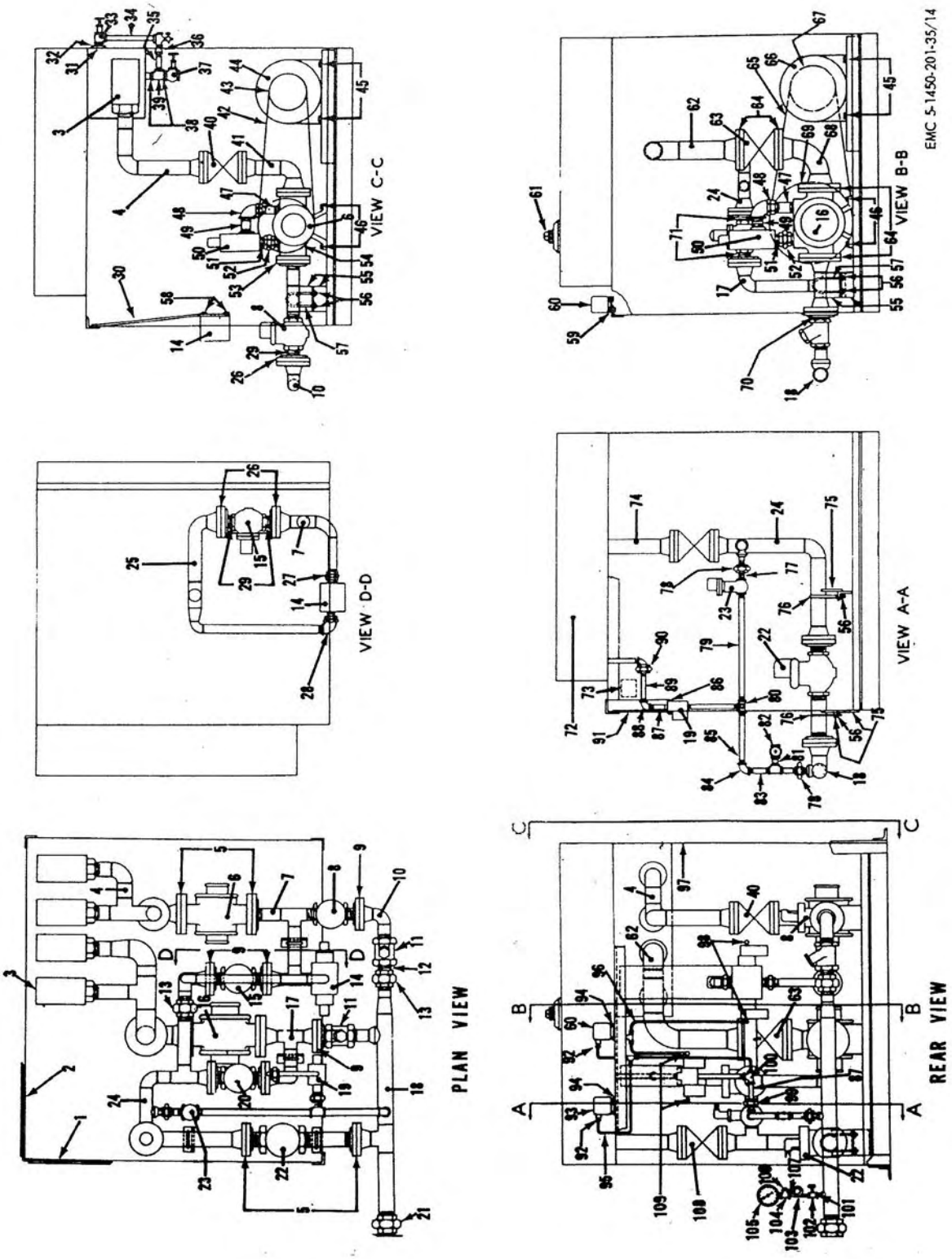

Figure 7-1. Power units NE-50000, NE-50004, and NE-50008.

1 Left safety guard assembly
2 Front safety guard assembly
3 Suction strainer
4 Pipe and flange assembly
5 Flange gasket
6 Hydraulic pump number 1
7 Pipe assembly
8 Shutoff solenoid valve S6
9 Flange gasket
10 Pipe flange assembly
11 Check valve
12 Pipe nipple
13 Union, female
14 Door four-way valve
15 Bypass solenoid valve SA1
16 Hydraulic pump number 2
17 Pipe flange
18 Pipe flange
19 Locking bar four-way valve
20 Bypass solenoid valve SA2
21 Union
22 Lowering solenoid valve S4
23 Leveling solenoid valve S3
24 Pipe and flange assembly
25 Pipe and flange assembly
26 Pipe flange
27 Union
28 Elbow union
29 Pipe nipple
30 Four-way valve support bracket and mounting plate
31 Tru-O-Seal
32 Reducing bushing
33 Tubular sediment gage
34 Sight tube
35 Pipe nipple
36 Reducing coupling
37 Globe valve
38 Pipe nipple
39 Pipe tee
40 Gate valve
41 Suction assembly, pump number 1
42 V-belts
43 Sheave, motor number 1
44 Motor number 1
45 Motor mounting capscrews and lockwashers
46 Pump mounting capscrews
47 Pipe nipple
48 Elbow union, female
49 Pipe nipple
50 Relief valve, pump number 1
51 Pipe nipple
52 Union, male to female
53 Pump number 1, discharge assembly
54 Sheave, pump number 1
55 Pipe support
56 Pipe support attaching parts
57 U-bolt
58 Four-way valve attaching parts
59 Mounting plate, pressure switch
60 Pressure switch number 1
61 Vent plug
62 Pipe and flange assembly
63 Gate valve
64 Flange gasket
65 V-belts, pump number 2
66 Motor number 2
67 Sheave, motor number 2
68 Suction assembly, pump number 2
69 Sheave, pump number 2
70 Pipe nipple
71 Pipe nipple
72 Main oil supply tank
73 Nameplate
74 Pipe flange
75 Pipe support
76 U-bolt
77 Pipe nipple
78 Union
79 Pipe
80 Pipe tee
81 Pipe nipple
82 Globe valve
83 Pipe nipple
84 Elbow
85 Pipe
86 Four-way valve, attaching parts
87 Pipe nipple
88 Elbow
89 Pipe nipple
90 Elbow union, female
91 Mounting bracket, four-way valve
92 Connector
93 Pressure switch number 2, NE-50008 only
94 Pressure switch, attaching parts
95 Copper tubing
96 Copper tubing
97 Base and reservoir support
98 Elbow
99 Union
100 Tee
101 Pipe nipple
102 Needle valve
103 Syphon tube
104 Tee
105 Pressure gage
106 Pipe plug
107 Reducing bushing
108 Gate valve
109 Elbow

Figure 7-1—Continued.

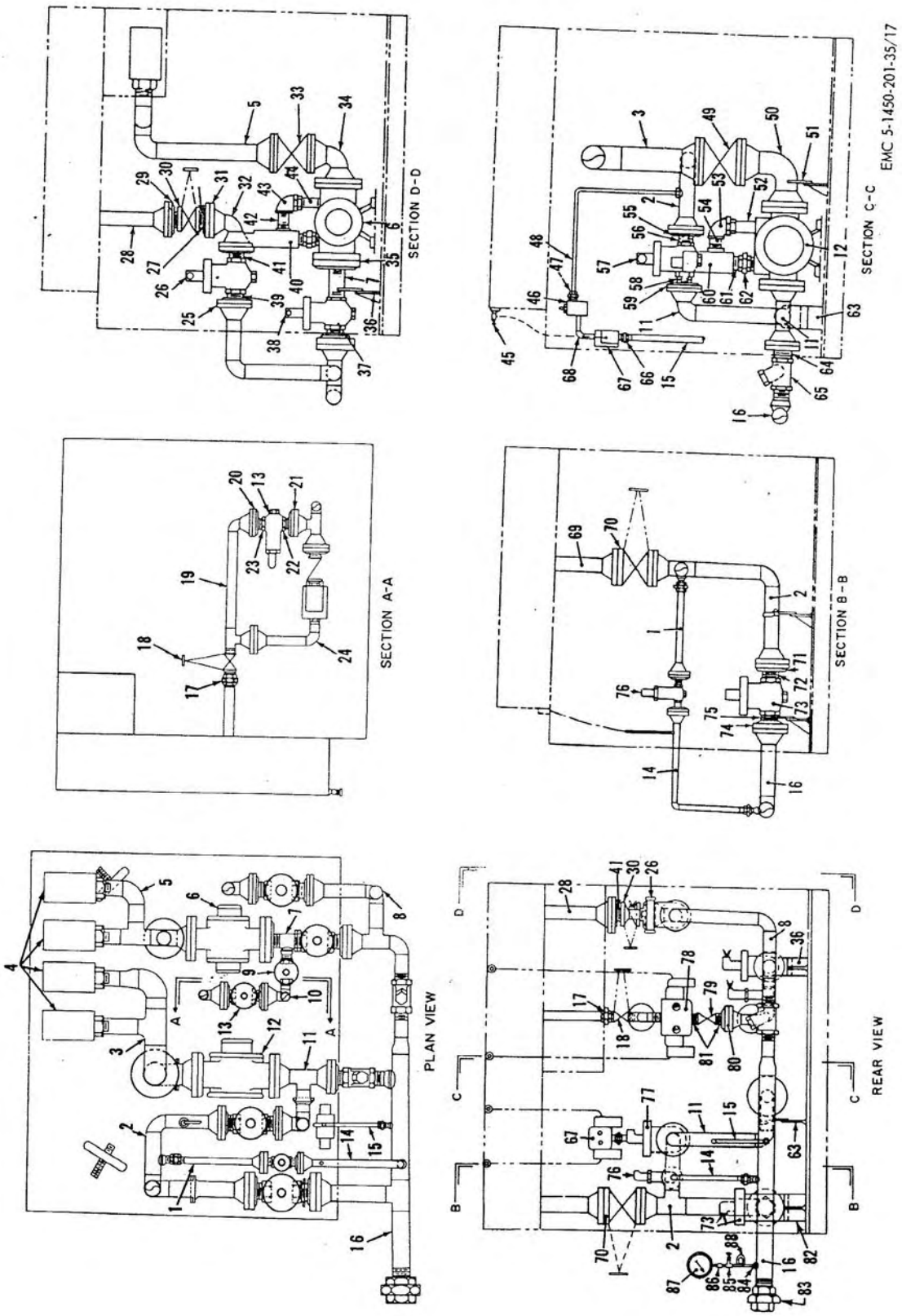

Figure 7-2. Power unit NE-50009.

1 Left side safety guard assembly
2 Front safety guard assembly
3 Suction strainer
4 Suction manifold, pump number 1
5 Pipe
6 Elbow union
7 Pipe nipple
8 Pipe nipple
9 Reducting bushing
10 Pipe nipple
11 Shutoff solenoid valve S6
12 Flange gasket
13 Pipe and flange assenbly
14 Check valve
15 Pipe nipple
16 Female union
17 Door four-way valve
18 Pump number 1 discharge valve
19 Flange gasket
20 Pump number 1
21 Bypass solenoid valve SA1
22 Pump number 2 discharge assembly
23 Discharge manifold assembly
24 Locking bar, four-way valve
25 Bypass solenoid valve SA1
26 Pump number 2
27 Pipe and flange assembly
28 Leveling solenoid valve S3
29 Union
30 Lowering solenoid valve S4
31 Suction manifold, pump number 2
32 Pipe and flange assembly
33 Flange
34 Union
35 Elbow union
36 Pipe nipple
37 Four-way valve support bracket
38 Tru-O-Seal nut
39 Reducing bushing
40 Sediment gage
41 Plastic sight tube
42 Reducing coupling
43 Globe valve
44 Pipe nipple
45 Pipe tee
46 Pipe nipple
47 Gate valve
48 V-belt, pump number 1
49 Motor number 1
50 Sheave, motor number 1
51 Motor mounting capscrews and lockwashers
52 Suction assembly, pump number 1
53 Sheave, pump number 1
54 Pump mounting capscrews and lockwashers
55 Pipe nipple
56 Elbow union
57 Pipe nipple
58 Doors bypass valve S7
59 Relief valve, pump
60 Pipe nipple
61 Union, 2-inch, male to female
62 Pipe flange, pump number 1 discharge
63 Nut and lockwasher
64 Pipe support
65 U-bolt
66 Reducing bushing
67 Relief valve, door circuit
68 Lockwashers and nuts
69 Pipe nipples
70 Gate valve
71 Flange gaskets
72 V-belts, pump number 2
73 Sheave, motor number 2
74 Motor number 2
75 Pipe nipple
76 Main fluid reservoir
77 Pipe nipple
78 Pipe and flange assembly
79 Pipe support
80 U-bolt
81 Union
82 Pipe nipple
83 Pipe, 1-inch
84 Pipe flange
85 Pipe nipple
86 Pipe
87 Pipe support
88 Pipe nipple
89 Globe valve
90 Pipe nipple
91 Pipe tee
92 Elbow
93 Pipe
94 Pipe tee
95 Pipe
96 Bolts and nuts, attaching
97 Pipe nipple
98 Elbow, female
99 Elbow union, female
100 Bracket, four-way locking bar valve
101 Nameplate
102 Copper tubing
103 Pressure switch number 2
104 Connector
105 Pressure switch number 1
106 Mounting plate
107 Pipe tee
108 Copper tubing
109 Flange gasket
110 Pipe
111 Elbow union, female
112 Elbow
113 Connector
114 Pipe nipple
115 Needle valve
116 Syphon
117 Pipe tee
118 Pipe plug
119 Reducing bushing
120 Pressure gage
121 Pipe tee
122 Mounting plate

Figure 7–2. Power unit NE–50009—Continued.

Table 1-2. Elevator Limit Switches—Continued

Limit switch	Function
	contacts are electrically connected in parallel to insure that both doors close fully. The second set is connected in series to insure that both doors are fully open before control relay 10 CR is energized.
18LS	This limit switch automatically levels the elevator to the pedestals in the ELEVATOR DOWN sequence.
20LS	This switch functions the elevator at floor level if the STOP button is pressed while the switch is tripped or the doors are closed.
13LS, 14LS, 15LS, 16LS	These switches are tripped when the locking bars retract and allow the platform to lower in the ELEVATOR DOWN sequence.
9LS, 10LS 11LS, 12LS	These switches, when activated by the locking bars, cause the locking bar indicating lights to glow, indicating that the locking bars are in the engaged position. The second set of contacts allows the elevator to level onto the locking bars.

Table 1-2. Elevator Limit Switches—Continued

Limit switch	Function
19LS	This switch is tripped at the SLOW UP position. Motor number 2 is thus stopped and the solenoid of the SA2 valve is deenergized.
17LS	The first set of contacts stops motor number 1 at the upper limit in an ELEVATOR UP sequence. Also the A solenoid of the locking bar 4-way valve is energized by the solenoid contacts.
21LS	This switch allows the elevator to rise to floor level with the doors closed. (Operation from master station only.)
22LS	This switch prevents the doors from closing if the elevator is above the intermediate position.

1-5. Differences in Models

Table 1-1 provides the essential difference among the types B, C, D, B-4, and B-special purpose elevators. The difference wil also be covered in the appropriate sections o this manual.

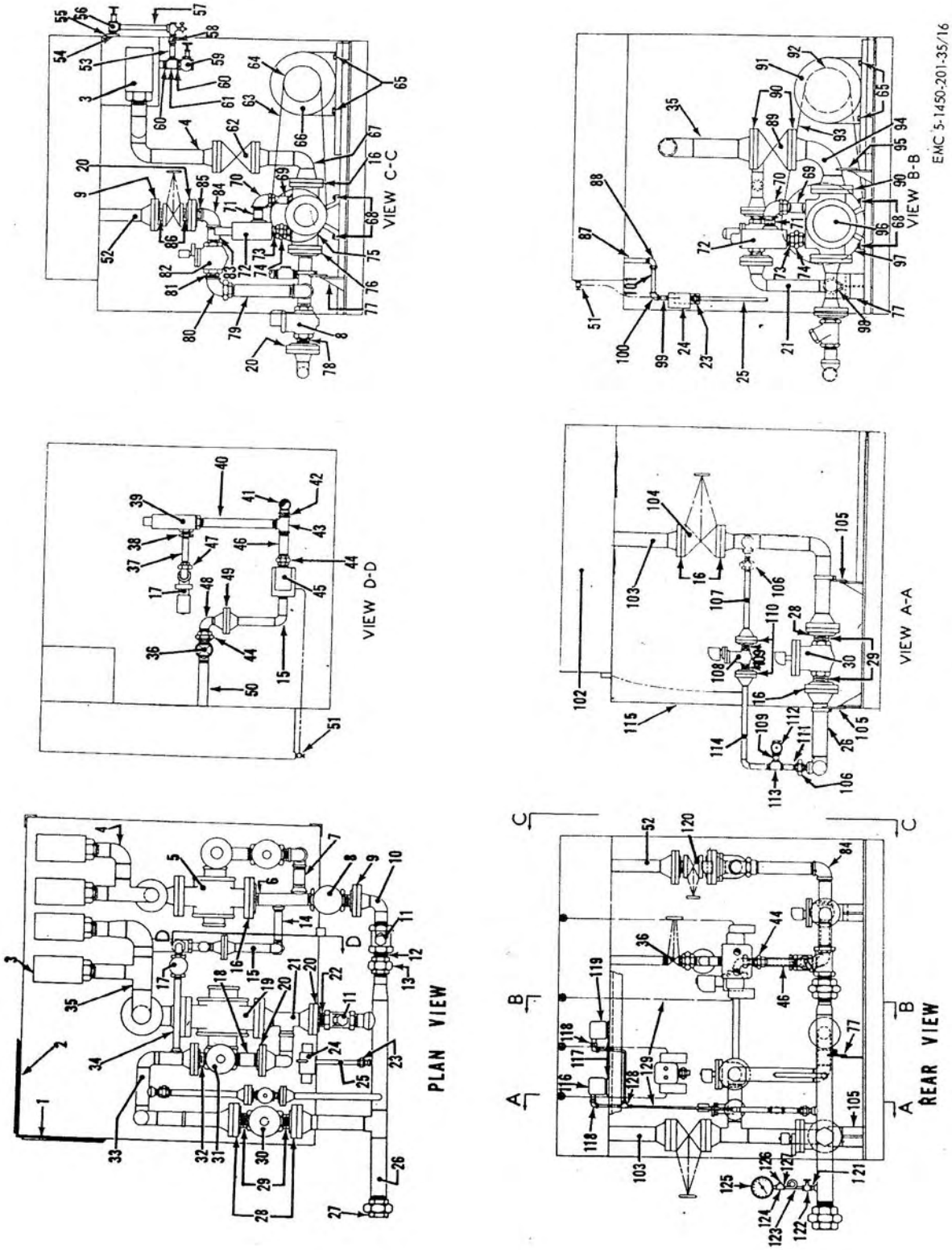

Figure 7-3. Power unit NE-50010 and 50012.

1 Left side safety guard assembly
2 Front safety guard assembly
3 Suction strainers
4 Suction assembly, pump number 1
5 Pump number 1
6 Pump number 1 discharge manifold
7 Pipe nipple
8 Shutoff solenoid valve S6
8 Flange gasket
10 Pipe and flange assembly
11 Check valve
12 Pipe nipple
13 Union, female
14 Pipe nipple
15 Pipe and flange assembly
16 Gasket
17 Doors bypass valve S7
18 Pipe nipple
19 Pump number 2
20 Pipe flange
21 Pump number 2, discharge assembly
22 Pipe nipple
23 Union
24 Locking bar four-way valve
25 Pipe and elbow assembly
26 Discharge manifold assembly
27 Union
28 Pipe flange
29 Pipe nipple
30 Lowering solenoid valve S4
31 Bypass solenoid valve SA2
32 Pipe nipple
33 Pipe and flange assembly
34 Pipe nipple
35 Suction manifold, pump number 2
36 Gate valve
37 Pipe nipple
38 Reducing bushing
39 Relief valve, doors circuit
40 Pipe
41 Elbow union
42 Pipe nipple
43 Pipe tee
44 Pipe union, male to female
45 Door four-way valve
46 Pipe nipple
47 Elbow union
48 Pipe and flange assembly
49 Pipe gasket, flange
50 Pipe, doors return line
51 Needle valve
52 Pipe and flange assembly
53 Pipe nipple
54 Tru-O-Seal nut
55 Reducing bushing
56 Sediment gage
57 Plastic sight tube
58 Reducing coupling
59 Globe valve
60 Pipe nipple
61 Pipe tee
62 Gate valve
63 V-belt, pump number 1
64 Sheave, motor number 1
65 Mounting capscrews and lockwashers
66 Motor number 1
67 Suction assembly, pump number 1
68 Mounting capscrews and lockwashers
69 Pipe nipple
70 Elbow union
71 Pipe nipple
72 Relief valve
73 Pipe nipple
74 Union
75 Pump number 1 sheave
76 Pump number 1 discharge flange
77 Pipe support
78 Pipe nipple
79 Pipe
80 Elbow union
81 Pipe nipple
82 Bypass solenoid valve SA1
83 Pipe nipple
84 Elbow
85 Pipe nipple
86 Pipe nipple
87 Pipe
88 Elbow union
89 Gate valve
90 Pipe gasket
91 Motor number 2
92 Sheave, motor number 2
93 V-belt, pump number 2
94 Suction assembly, pump number 2
95 Pipe support
96 Pump number 2
97 Sheave, pump number 2
98 Pipe support
99 Pipe nipple
100 Elbow
101 Pipe nipple
102 Fluid reservoir tank
103 Pipe and flange assembly
104 Gate valve
105 Pipe support
106 Union, male to female
107 Pipe and flange assembly
108 Leveling solenoid valve S3
109 Pipe nipple
110 Pipe gasket
111 Pipe nipple
112 Globe valve
113 Pipe tee
114 Pipe and flange assembly
115 Base and oil tank support
116 Pressure switch number 2
117 Mounting plates
118 Tubing elbow
119 Pressure switch number 1
120 Gate valve
121 Pipe nipple
122 Needle valve
123 Syphon
124 Pipe tee
125 Pressure gage
126 Pipe plug
127 Reducing bushing
128 Compression tee
129 Copper tubing

Figure 7–3. Power unit NE–50010 and 50012—Continued.

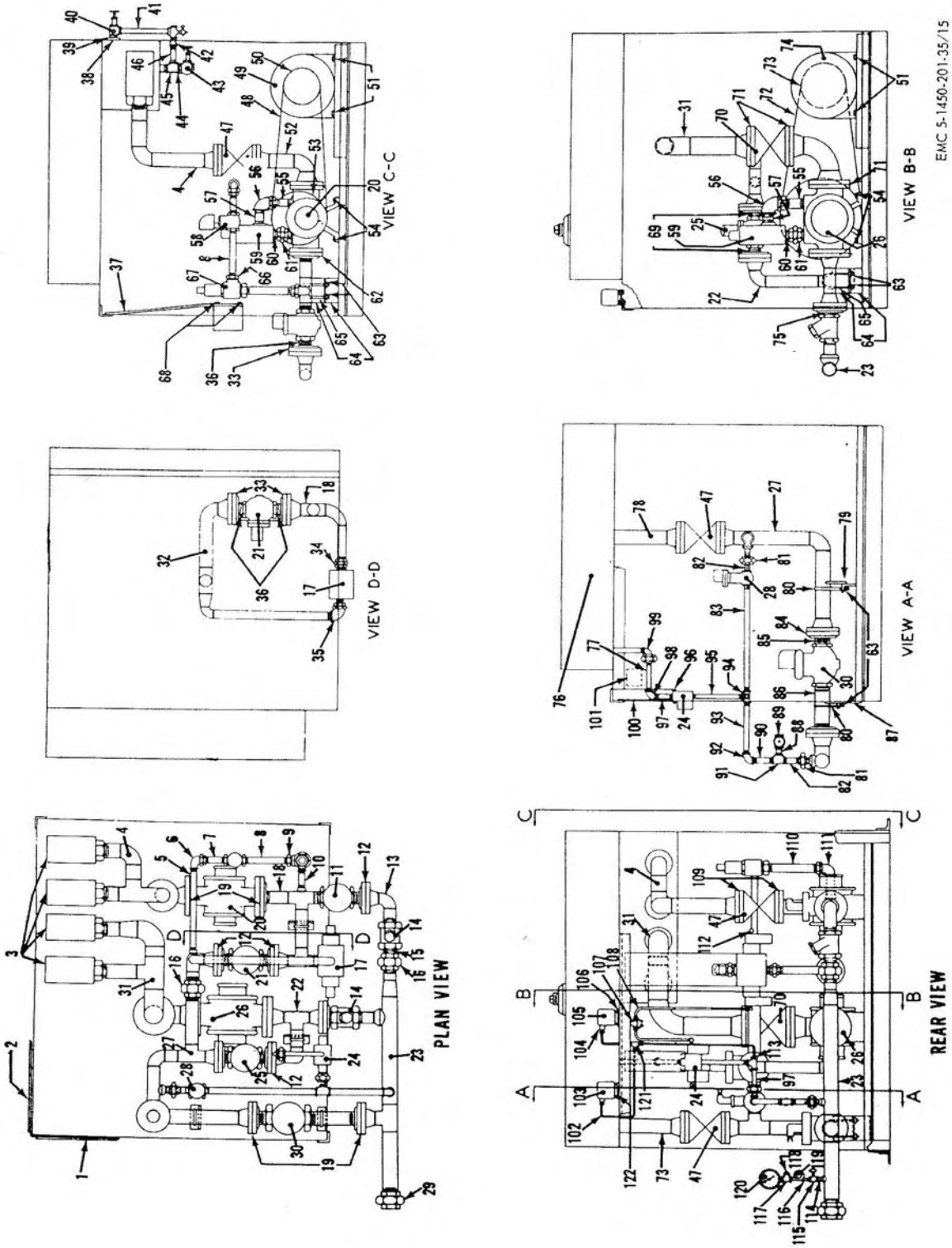

Figure 7-4. Power unit 5007.

1 Pipe and flange
2 Pipe flange, pump number 2 pump discharge
3 Suction manifold, pump number 2
4 Suction strainer
5 Suction manifold, pump number 1
6 Hydraulic pump number 1
7 Pipe assembly, T-shape
8 Manifold assembly
9 Shutoff solenoid valve S5
10 Pipe and flange assembly
11 Pipe and flange assembly
12 Hydraulic pump number 2
13 Bypass solenoid, SB
14 Pipe and flange assembly
15 Pipe assembly, four-way valve to manifold
16 Discharge manifold assembly
17 Union, male, female
18 Valve, gate
19 Pipe and flange assembly
20 Pipe flange
21 Flange gasket
22 Pipe nipple
23 Pipe nipple
24 Pipe and flange assembly
25 Flange gasket
26 Bypass solenoid valve, SA1
27 Pipe nipple
28 Pipe assembly
29 Flange
30 Gate valve
31 Flange
32 Flange assembly
33 Gate valves
34 Pipe flange assembly, pump number 1 suction
35 Reducing flange
36 Pipe support
37 Pipe nipple
38 Shutoff solenoid valve, S6
39 Pipe nipple
40 Relief valve, pump number 1
41 Pipe nipple
42 Pipe nipple
43 Union elbow
44 Pipe nipple
45 Needle valve
46 Locking bar flow control valve
47 Union, male, female
48 Pipe assembly
49 Gate valve
50 Pipe flange assembly, pump number 2 suction
51 Pipe support
52 Pipe nipple
53 Elbow union
54 Pipe nipple
55 Flange
56 Pipe nipple
57 Operating solenoid (SA2 valve)
58 Pipe nipple
59 Flange gasket
60 Relief valve, pump number
61 Pipe nipple
62 Union
63 Pipe support
64 Pipe nipple
65 Check valve
66 Union
67 Locking bar, four-way valve
68 Pipe assembly
69 Pipe and flange assembly
70 Gate valve
71 Flange
72 Pipe nipple
73 Lowering solenoid valve, S4
74 Flange
75 Pipe nipple
76 Leveling solenoid valve, S3
77 Bypass solenoid valve SA2
78 Door four-way valve
79 Check valve
80 Flange
81 Pipe nipple
82 Pipe support
83 Union
84 Close nipple
85 Needle valve
86 Pipe tee, outlet connection
87 Pressure gage
88 Syphon tubing

Figure 7-4. Power unit 5007—Continued.

(*b*) Door (14, fig. 7-1) and locking bar (19) 4-way valve wiring at valve coil leads. Disconnect flexible conduit at valve terminal cover.

(*c*) Disconnect 2-way solenoid valve wiring including S3 (23), S4 (22), S6 (8), SA1 (15), and SA2 (20). Disconnect wiring and conduits at valve coil housings.

(*d*) Remove and tag all conduit and wiring from power unit.

(10) Remove pressure gage (10, fig. 3-26), pipe tee (12), with tubing and shutoff valve assembly (13). Install a pipe plug where assembly was removed.

(11) Remove power unit hold-down bolts (17), jack-up unit, insert rollers and move unit out into magazine area.

(12) Plug 3-inch manifold connection.

b. Installation.

(1) Install the replacement unit and tighten lag bolts (17) through mounting flange (16).

(2) Attach pressure gage (10), pipe tee (12) with tubing and shutoff valve (13).

(3) Attach the following electrical wiring:

(*a*) Wiring to terminals of motor number 1 (44, fig. 7-1) and motor number 2 (66). Attach the flexible conduit.

(*b*) Door and locking bar 4-way valve (14, 19) wiring at valve coil leads. Attach the flexible conduit at valve terminal cover.

(*c*) 2-way solenoid valve wiring including S3 (23), S4 (22), S6 (8), SA1 (15), and SA2 (20) at valve coil housing.

(*d*) All other tagged conduit and wiring.

(4) Tighten 3/4-inch unions (3, fig. 3-26) on locking bar cylinder piping at 4-way valve.

(5) Tighten 1 1/2-inch unions (6) on door cylinder piping at 4-way valve.

(6) Tighten union on tank valve pipe assembly (2, fig. 3-24).

(7) Tighten 3-inch manifold union (14, fig. 3-26) on pipe line to main cylinder.

(8) Remove reservoir access cover (18, fig. 3-24) and fill reservoir (16) with hydraulic fluid. (Refer to current lubrication order.)

(9) Turn on main power switch.

7-100. Elevator Assembly

a. Removal.

(1) Open doors (par. 2-10).

(2) Remove two bolts (2, fig. 7-5), holding clamp plate (3), and pressure plate (4), and plunger (5) to load channels (1).

(3) Raise elevator to locking bars (par. 2-10).

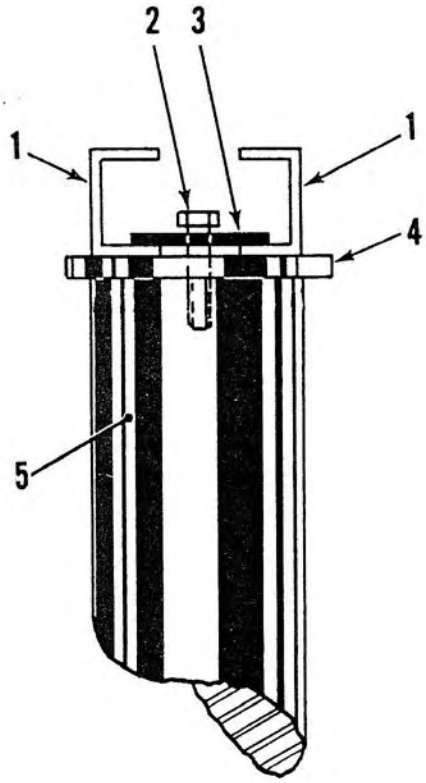

EMC 5-3960-201-35/18

1 Load channels
2 Bolts
3 Clamp plate
4 Pressure plate
5 Plunger assembly

Figure 7-5. Top of plunger assembly.

(4) Remove guide rail casters by removing 4 nuts and bolts which hold each to the chassis frame.

(5) Remove equalizer cables by removing wire rope clips at the ends of the cables.

(6) Flame-cut two rectangular holes in deck in extreme aft end and two holes 20 feet from forward end of platform, outboard of the main chassis member.

(7) Run lifting cables through holes and around chassis beams. Lift elevator assembly off with two cranes.

b. Installation.

(1) Replace elevator assembly by lowering onto I-beams across magazine pit opening. Raise plunger and replace and tighten bolts.

(2) Reweld rectangular cutouts in platform deckplate.

(3) Replace guide rail casters by fastening them to the chassis frame with four nuts and bolts.

(4) Replace and adjust equalizer cables (par. 7-102).

7-101. Guide Rails and Caster Brackets

a. Removal.

(1) Place the elevator platform on the I-beams across the pit opening in the magazine floor.

(2) Remove 8 caster assemblies (4, fig. 7-6) and brackets (2 and 9), by removing four nuts and bolts (5) which hold each to the chassis frame (15).

(3) Remove guide rails (16) by removing 10 bolts (9, fig. 3-30) which attach them to the concrete ends of the installation.

(4) Lower platform to pedestals, and remove guide rail attaching bolt (9).

Note. Gain access to the pit through the plate at the forward end of the platform.

(5) Lift out the guide rail using a wire rope sling.

Note. Guide rails may be welded to embedded channel. Break or cut welds where required.

b. Installation.

(1) Reestablish mean center line.

(*a*) Measure accurately to determine center line between seal mounting angles.

(*b*) Measure accurately to determine center line between pit opening angles at magazine floor.

(*c*) Drop a plumb line from center line found in (*a*) above.

(*d*) Compute mean center line by taking half the distance between center line (*b*) above, and plumb line.

(*e*) These new points, determined similarly at both ends of the installation, identify the mean center reference points.

(*f*) To establish the mean center line in the required vertical, longitudinal plane, move the plumb lines to intersect the newly computed mean and center line points.

(2) Install guide rails on the vertical mean center lines by replacing all bolts, seals, and other attaching parts, (*a* above), and by placing shims (7 and 8, fig. 3-30) at these attaching points to assure that the rails are plumb in two planes.

(3) Weld top of guide rail to the embedded channel using a 3/8-inch fillet weld.

(4) Install caster brackets (2 and 9, fig. 7-6), by replacing all attaching parts (*a* above) and by placing shims between brackets and chassis, if necessary, to be sure caster assemblies (4) contact and aline with guide rail (16).

7-102. Equalizer Assembly

a. Adjustment The guide rail V-grooved rollers are properly adjusted when there is an equal distance of 1/16-inch on each side between the rollers and rail, or a maximum of 1/8-inch measurement between the roller and the rail when the opposite roller is touching the rail.

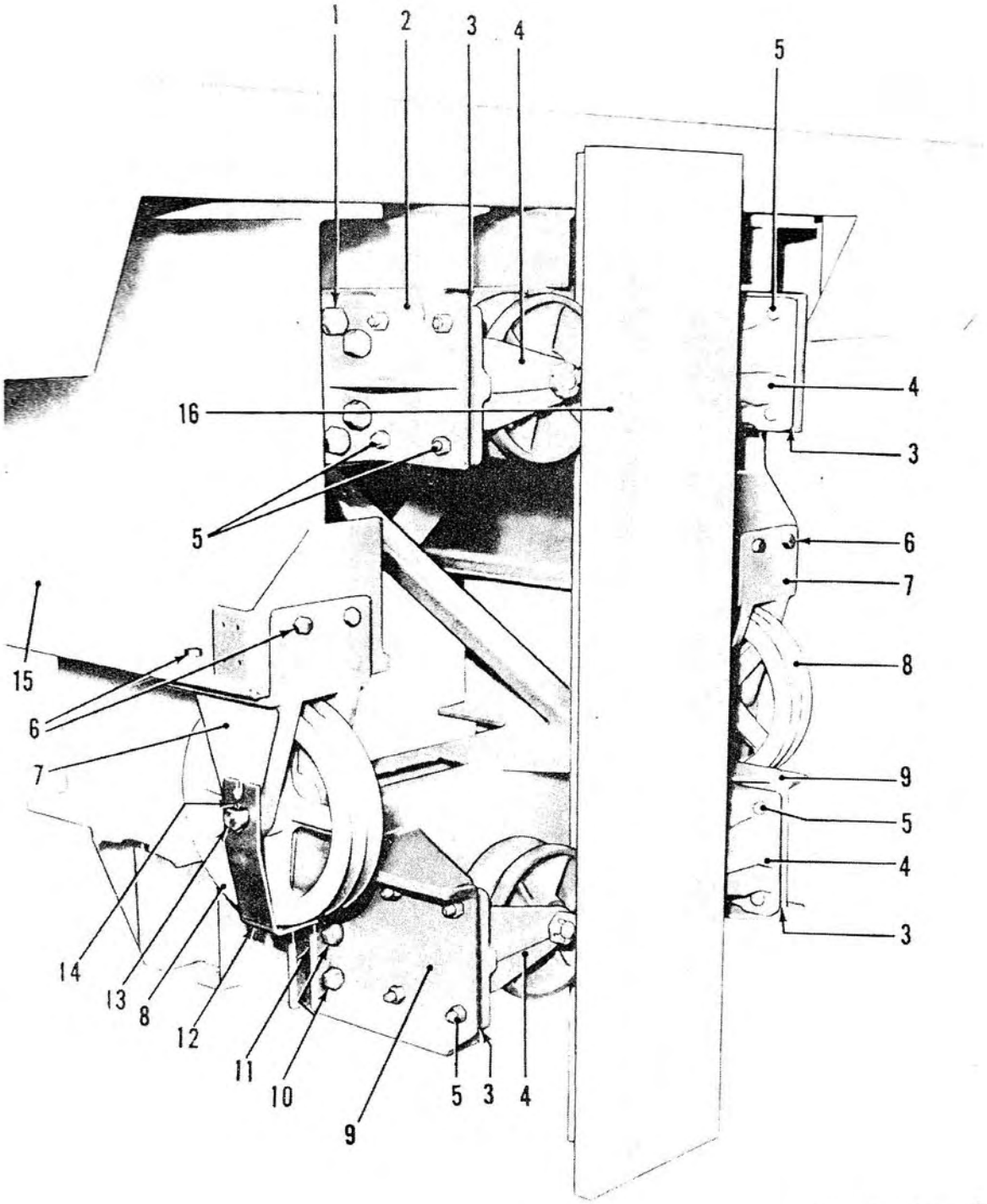

Figure 7-6. Casters and brackets, installed view.

1 Bolt, hex head
2 Upper caster bracket
3 Caster shim
4 Caster assembly
5 Bolt and hex nut
6 Bolt and hex nut
7 Sheave bracket
8 Sheave
9 Lower caster bracket
10 Bolt and hex nut
11 Lower caster bracket shim
12 Cable retainer
13 Sheave pin
14 Cotter pin
15 Chassis frame
16 Guide rail assembly

Figure 7-6—Continued.

b. Removal.

(1) Place platform on I-beams placed across pit opening at magazine floor level.

(2) Remove 8 equalizer cable eyebolts (4, fig. 3-30), by loosening nuts (5) which attach them to tie angles (1).

(3) Remove wire rope clips (3) from the ends of the 4 equalizer cables (12). Unbend cable and remove wire rope eyes.

(4) Remove cables (12).

(5) Remove four cable retainers (12, fig. 7-6), and four double-groove equalizer sheaves (8) by removing cotter pins (14) and sheave pins (13).

(6) Remove 4 sheave brackets (7) by removing 4 nuts and bolts (6) holding each to chassis frame (15).

c. Installation.

(1) Attach 4 sheave brackets (7) to chassis frame (15) with 4 nuts and bolts (6).

(2) Install double-groove sheaves (8) and cable retainers (12). Insert sheave pins (13) through bracket and sheave. Secure with cotter pin (14).

(3) Thread equalizer cables (12, fig. 3-30) from top of tie angles (1), down and under sheave grooves, along the length of the elevator chassis, over the top sheave grooves, at the opposite end of the elevator chassis, and down to the bottom of the tie angles.

(4) Place cable eye through eyebolt (4) and squeeze until ends meet. Insert cable (12) through eyebolt and bend around cable eye. Fasten with wire rope clips (3) as close as possible to the cable eye, being sure that U-shaped part bears on short stub, not on the long cable proper.

Note. Be sure each cable lies in its own plane when moved from one end or the other and does not cross the path of the adjacent cable.

(5) Place one eyebolt nut (5) on each eyebolt and turn it on as far as possible.

(6) Insert eyebolt through tie angle (1) bracket hole and place remaining eyebolt nut on eyebolt.

(7) Tighten outer nuts until equalizer cables are tight, then tighten inside nuts against the tie angle brackets until eyebolts are securely held in place in both directions.

Note. When tightening the outer nuts, attempt to achieve a situation in which the threads of all eyebolts extend equally through the tie angle brackets. This will facilitate equalizing adjustments.

(8) Adjust cables (par. 3-128).

7-103. Main Plunger Assembly

a. Removal.

(1) Remove platform clamp bolts (2, fig. 7-5).

(2) Take out clamp plate (3) beneath bolts.

(3) Replace bolts (2) to hold pressure plate (4) secure.

(4) Raise platform fully and be sure locking bars are engaged.

(5) Set suitable rigging from chassis I-beams to handle plunger.

(6) Close 3-inch gate valve near base of main cylinder and plunger.

(7) Loosen top bearing gland (8, fig. 7-7), by removing nuts (24). Clamp the gland to the plunger (1) to prevent it from dropping.

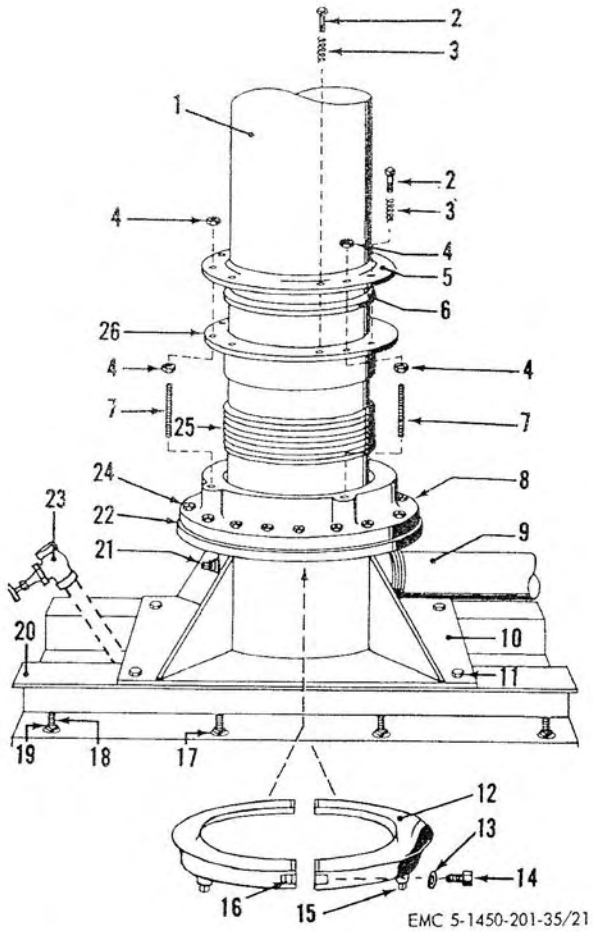

1 Plunger
2 Bolt
3 Wiper ring pressure plate spring
4 Hex nut
5 Wiper ring pressure plate
6 Wiper ring
7 Stud
8 Top bearing gland
9 Main hydraulic line
10 Main cylinder assembly
11 Base plate bolt
12 Drip pan
13 Washer
14 Cap screw
15 Drain plug
16 Pivot nut
17 Tapered washer
18 Anchor bolt
19 Hex nut
20 Mounting channels
21 Cylinder bleeded plug
22 Cylinder flange gasket
23 Gate valve
24 Hex nut
25 Hydraulic packing set, chevron
26 Top bearing ring packing gland

Figure 7-7. Main cylinder and plunger assembly.

Figure 7-7—Continued.

(8) Drop plunger down to clear chassis I-beams; swing out from top and raise plunger to clear cylinder assembly.
(9) Remove plunger.

b. Installation.

(1) Rig plunger and carefully lower into cylinder assembly.

Note. Make certain the 2 platform clamp bolt holes in the top of the plunger are oriented perpendicular to the center line.

(2) Unclamp and lower top bearing gland. Fasten securely with nuts (24).
(3) Open 3-inch gate valve.
(4) Bleed the system by removing the bleeded plug (21) from the cylinder assembly (10). Turn pump number 2 clockwise by hand until hydraulic fluid is forced out in a steady stream.
(5) Replace the plug and rotate pump number 2 by hand until the plunger is in position against the platform I-beams.
(6) Lower platform to pedestals.
(7) Remove platform clamp bolts (2, fig. 7-5) and install clamp plate (3).
(8) Replace and tighten bolts (2).

Caution: **Make certain there is 1/4-inch clearance beneath heads of bolts (2) and clamp plate (3).**

7-104. Main Cylinder Assembly

a. Removal.

(1) Remove main plunger assembly (par. 7-103).
(2) Remove four cylinder base bolts (11, fig. 7-7).
(3) Chip out 4 inches of concrete around cylinder at floor level.
(4) Attach lifting hooks of rigging to cylinder base plate and lift out evenly.

b. Installation.

(1) Lower cylinder assembly (10) in place in casing, and plumb by shimming base plate if necessary.

(2) Pour dry sand into casing, filling to within 4 inches of the top. Fill remaining space with concrete.
(3) Chalk any spaces between concrete cap and floor or cylinder to keep out moisture.
(4) Install plunger (par. 7-103).

7-105. Door Assembly

a. Removal.

(1) Open doors (par. 2-10).
(2) Remove weather seals (par. 7-108) from the door opening angle (5, fig. 7-8).
(3) Flame cut door opening angle above each hinge box, and remove an 18-inch section over the center of each door hinge.
(4) Disconnect door linkage (18 and 19, fig .7-9) by removing hinge pin (15).

Note. Steps (5), (6), (7), and (10) refer to type B elevators only. Type C elevator doors are in one piece.

(5) Flame-cut welds between door sections.
(6) Remove strap underneath door splice.
(7) Cut insert splice between ends of tubular beams at center of door.
(8) Place heavy duty sling around each of four sections (type B only) at hinge points and hoist up slightly to take weight off hinge pins (4, fig. 7-8).
(9) Remove hinge pins (4) and hoist off door sections.
(10) Drill out plug welds at insert splices on remaining sections and remove pieces of insert splices.

b. Installation.

(1) Raise door section (9, fig. 7-8) to vertical position, hinges down.
(2) Install insert splice (type B only) inside tubular beam flush with beam end at door center.
(3) Install hinge pins (4) in first section (type B only), (all sections, type C)
(4) Place sling on door or on mating section (type B) and lower vertically into place with hinges at bottom.
(5) Insert remaining hinge pins (type B only).

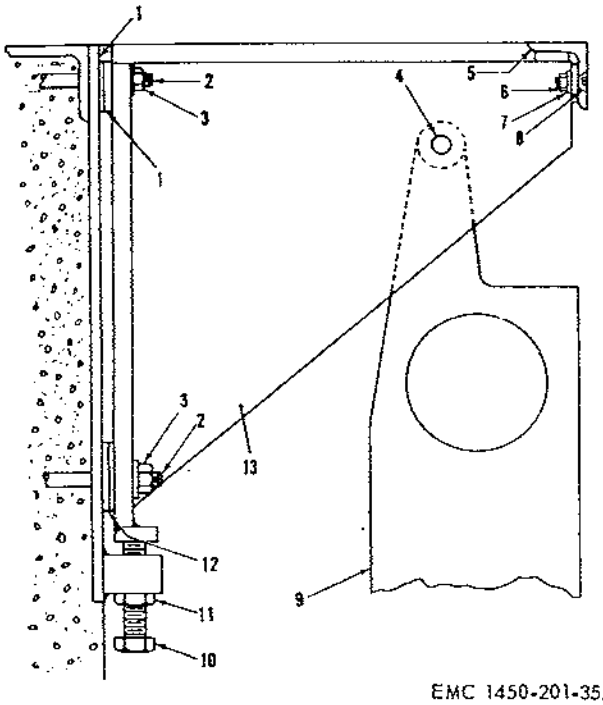

EMC 1450-201-35/6

1 Hinge backing plate
2 Anchor bolt
3 Nut
4 Hinge pin
5 Door opening angle
6 Nut
7 Plain washer
8 Flat head angle attaching screw
9 Door
10 Vertical adjusting bolt
11 Adjusting bolt locknut
12 Shims
13 Hinge box

Figure 7-8. Short hinge box assembly.

(6) Drive insert splice (type B only) until it projects equally into each door section.
(7) Aline doors with each other.
(8) Plug weld insert splice (type B only) to tubular beam at holes provided.
(9) Weld door sections together at their joining edges.
(10) Install linkage (18 and 19, fig. 7-9) and secure with pin (15).
(11) Reweld sections of door opening angle assembly (5, fig. 7-8), removed in paragraph 7-108.
(12) Install weather seals (par. 7-108).

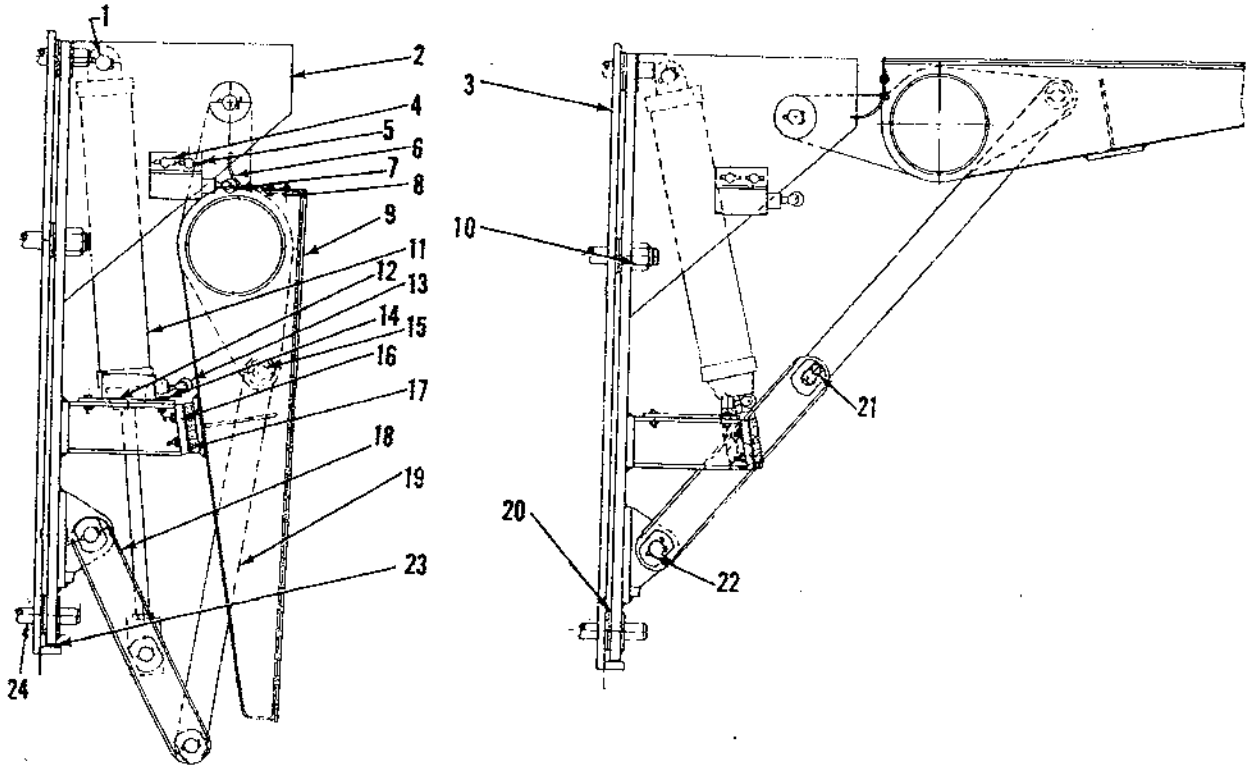

EMC 5-1450-201-35/23

1 Cylinder head end hinge pin
2 Hinge box assembly
3 Embedded backing plate
4 Cap screws
5 Limit switch bracket
6 Doors open limit switch cam
7 Limit switch (doors open) (1LS, 2LS)
8 Cap screw
9 Door
10 Hinge box attaching nut
11 Door operating cylinder
12 Limit switch bracket
13 Limit switch (doors closed) (1LS, 2LS)
14 Cap screw
15 Linkage hinge pin
16 Shim
17 Door stop pad
18 Short link
19 Long link
20 Shims
21 Locking strap cap screw
22 Cotter pin
23 Vertical adjusting shims
24 Anchor bolt

Figure 7-9. Door operating assembly.

7-106. Locking Bar and Bracket

a. Removal.

(1) Remove access cover plate (1, fig. 7-10), over locking bar (1, fig. 7-11).

(2) Close doors and lower platform (par. 2-10).

(3) Close locking bar shutoff valves (1 and 2, fig. 3-26)at the 4-way valve.

(4) Place a clean container beneath locking bar cylinder to receive the hydraulic fluid.

(5) Disconnect locking bar cylinder hoses (25 and 27, fig. 7-11) at the unions (23 and 24).

(6) Remove screws (16) holding limit switch stationary mounting bracket (15) to support bracket assembly.

(7) Lower a lifting cable through access opening and secure to top of locking bar.

(8) Remove cotter pins (6), nuts (5), and bolts (10), freeing linkage (4), and cylinder (26) for removal.

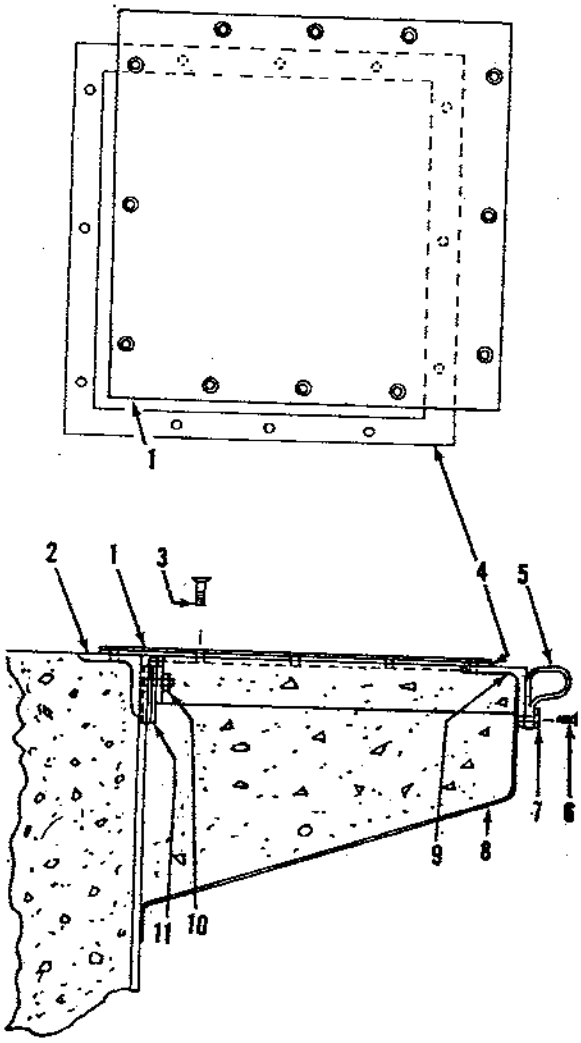

1 Access cover plate
2 Embedded angle
3 Screw
4 Access cover plate gasket
5 Weather seal
6 Screw
7 Door seal mounting strip
8 Form pan

Figure 7-10. Door opening and access doors.

9 Door opening angle assembly
10 Nut
11 Shims

Figure 7-10—Continued.

(9) Remove cotter pin (21) and hinge pin (20) freeing locking bar (1). Lift up and support locking bar.

(10) Remove nuts (18) attaching support bracket assembly (30) to wall.

(11) With a second lifting cable, secure support bracket assembly.

(12) Using a heavy crowbar, force support bracket assembly away from wall.

(13) Lower support and locking bar for removal.

b. Installation.

(1) Close the doors and lower the platform (par. 2-10).

(2) Lower a lifting cable through access opening and secure to top of locking bar.

(3) Lift locking bar into approximate position as high as floor will allow.

(4) With a second lifting cable, lift support bracket assembly (30) into position, and install on support anchor bolts (19).

(5) Secure with nuts (18).

(6) Reestablish mean center line by stretching wire from vertex of each guide rail.

(7) Check to see that rear edge of support bracket assembly is 6 feet, 5 1/2 inches from mean center line. If it is not, shim to the proper dimension.

Note. Maximum allowable shimming is 1 inch.

(8) Lower locking bar into position and insert hinge pin (20) and cotter pin (21).

(9) Lubricate freely at fittings (22).

(10) Install linkage (4) and cylinder (26) and secure with bolts (10), nuts (5), and cotter pins (6).

(11) Install limit switches (11 and 29) by attaching stationary mounting brackets (15) with screws (16).

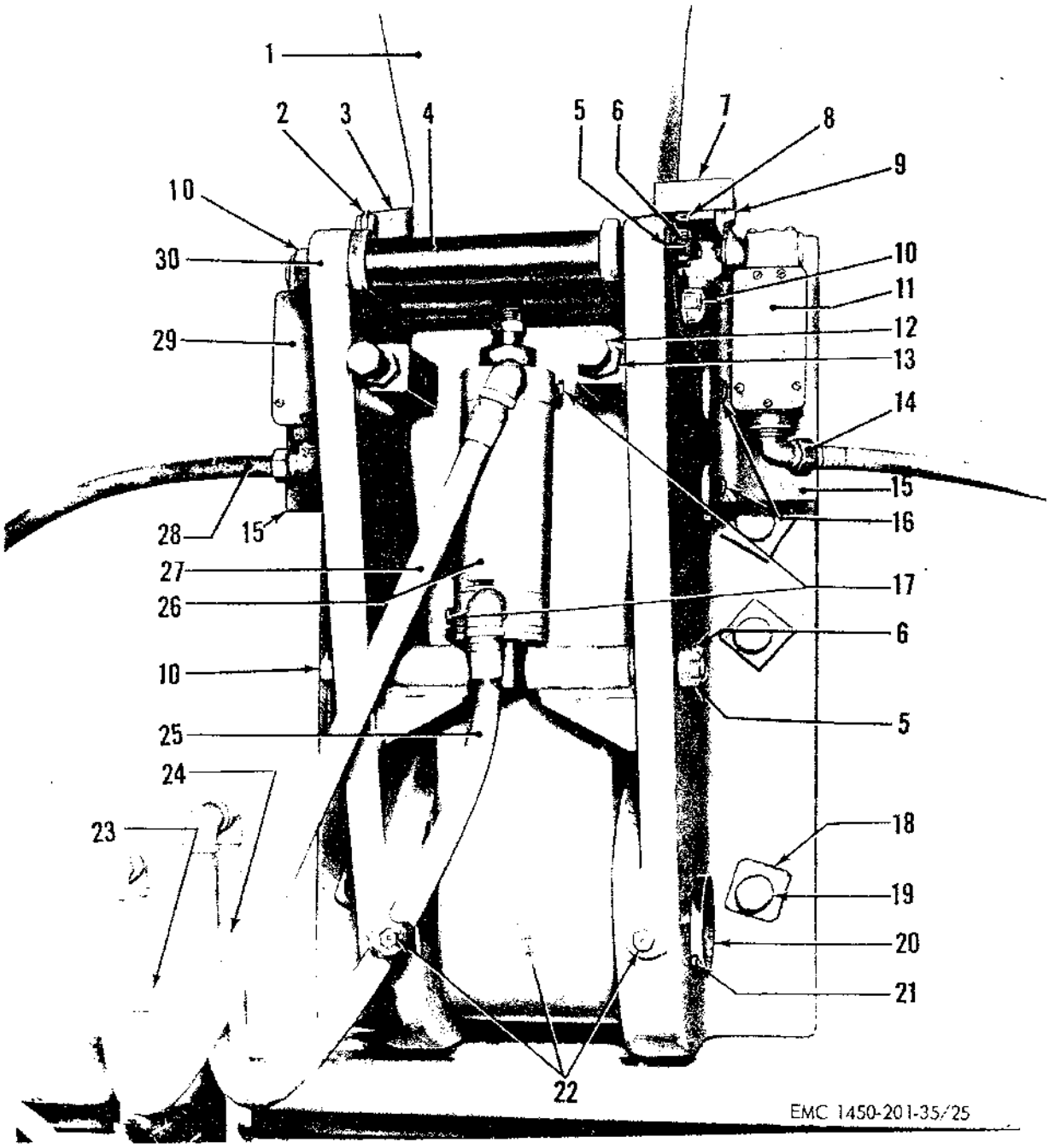

1 Locking bar
2 Engage limit switch lever arm
3 Engage limit switch cam
4 Linkage assembly
5 Nut
6 Cotter pin
7 Retract limit switch cam
8 Cam attaching screw
9 Retract limit switch lever arm
10 Linkage bolt
11 Retract limit switch (13LS, 14LS, 15LS, 16LS)
12 Locking bar engage stop screw
13 Locknut
14 Conduit connector

Figure 7-11. Locking bar assembly and typical limit switches, installed view.

15 Limit switch mounting bracket
16 Bracket attaching screw
17 Cylinder bleeder
18 Bracket support attaching nut
19 Anchor bolt
20 Hinge pin
21 Cotter pin
22 Grease fittings
23 Rod end union
24 Head end union
25 Head end hose assembly
26 Locking bar hydraulic cylinder
27 Rod end hose assembly
28 Engage limit switch conduit
29 Engage limit switch (9LS, 10LS, 11LS, 12LS)
30 Locking bar support bracket

Figure 7-11—Continued.

(12) Connect locking bar cylinder hoses (25 and 27) at the unions (23 and 24).

c. *Adjustment.*

(1) Loosen the 2 locknuts (13) and stop screws (12) so they do not extend through the support blocks.

Note. Some locking bar assemblies are not equipped with stop screws and locknuts. These stop screws prevent the locking bar from hitting the bolster and reduce the noise of hitting.

(2) Disconnect the electrical lead Number 46 from the terminal board of the control cubicle (figs. 6-3, 6-5, 6-7, 6-9, and 6-11).

(3) Raise the elevator to the top position (par. 2-10).

Note. Elevator will remain approximately 4 inches above the locking bars (1, fig. 7-11).

(4) Advance the stop screws (12) until the locking bar is 1/8 inch from the shim surface.

Note. Shims are welded to the bolster. When the locking bar (1) hits the stop screws, there is a 1/8-inch clearance between the locking bar and bolster.

(5) Lock the stop screws in position with the locknuts (13).

(6) Connect the electrical lead number 46 to the terminal board of the control cubicle (figs. 6-3, 6-5, 6-7, 6-9, and 6-11).

7-107. Pedestal Leveling Jacks

a. *Removal.*

(1) Raise elevator out of pit to provide working room.

(2) Remove 4 nuts (7, fig. 7-12) which hold leveling jacks in place.

(3) Using a block and tackle, lift out leveling jacks.

Warning: **Before undertaking pit work, be sure main power switch is in OFF position.**

b. *Installation.*

(1) Lower pedestal jack onto grouted area so the four anchor bolts enter the base plate holes and so the two smaller gussets between the pedestal base pipe (5) and base plate (6) face toward the center line of the pit.

(2) Replace and tighten 4 nuts (7).

7-108. Top Frame Assembly

a. *Removal.*

(1) Remove the access cover plate (1, fig. 7-10) by removing screws (3).

(2) Remove access cover plate gasket (4).

(3) Remove weather seals (5) from door angle assembly (9) by removing screws (6) and mounting strips (7). Remove weather seals (2, fig. 7-13) from end angle assembly (5) by unfastening screws (3) and mounting strips (4). Remove door nose seals (2, fig. 7-14) by unfastening screws (4) and mounting strips (3).

(4) Break out concrete from form pans (8, fig. 7-10).

(5) Cut tack welds holding from pans and remove them.

(6) To remove end angle assemblies (1, 5, and 6, fig. 7-13), cut weldment (11) securing the end angle assembly to the embedded channel (10).

(7) Remove nuts (8) and lift out end angle assemblies.

(8) To remove door opening angle assemblies (5, fig. 7-8), remove screws (8),

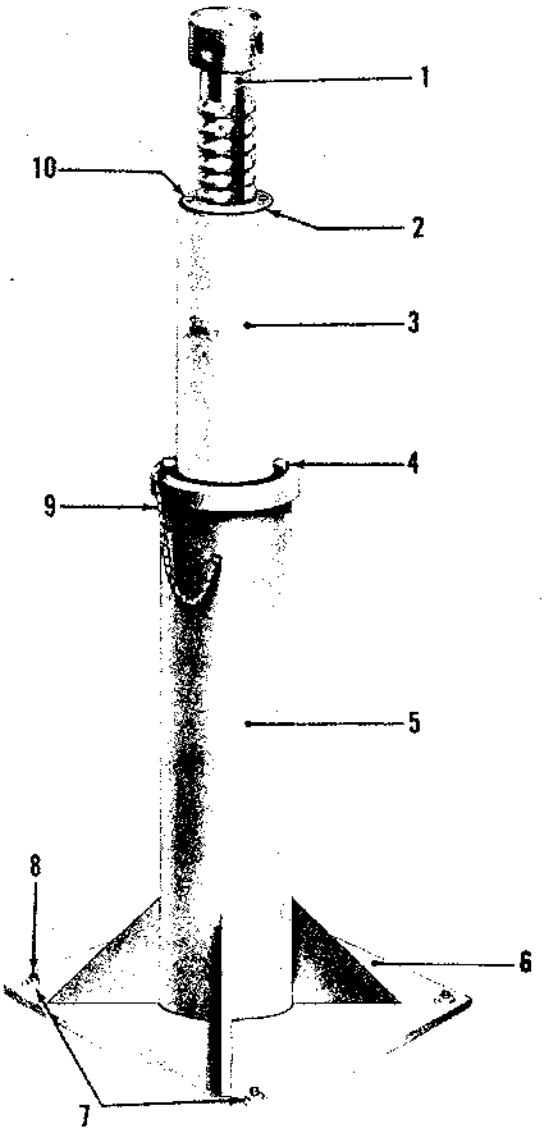

1 Jack screw
2 Jack screw locking collar
3 Pedestal extension pipe
4 Pedestal extension pin
5 Pedestal base pipe
6 Base plate assembly
7 Nuts
8 Anchor bolt
9 Safety chain
10 Cap screws

Figure 7-12. Pedestal leveling jack.

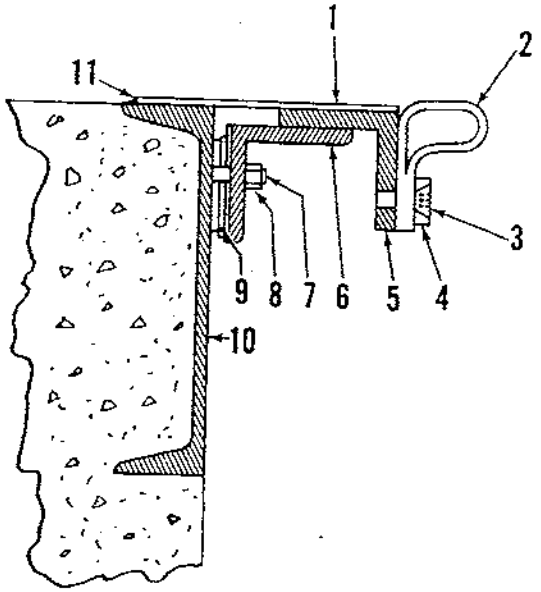

1 Cover plate and angle assembly
2 Weather seal
3 Flat head screw
4 Seal mounting strip
5 Upper angle end angle assembly
6 Lower angle end angle assembly
7 Stud
8 Hex nut
9 Shims
10 Embedded channel
11 Weldment

Figure 7-13. End angle and seal assemblies.

washers (7), nuts (6), which hold the door opening angle assemblies to spacers welded on hinge box (13).

(9) Remove nuts (11, fig. 7-10) holding door opening angle assemblies to embedded angles (2).

(10) Lift out door opening angle assemblies.

b. Installation.

(1) Install door opening angle assemblies (9, fig. 7-10), shimming (10) between embedded angle (2) and door operating angle to maintain 2-inch clearance between angle assembly and platform, so weather seal (5) may be installed.

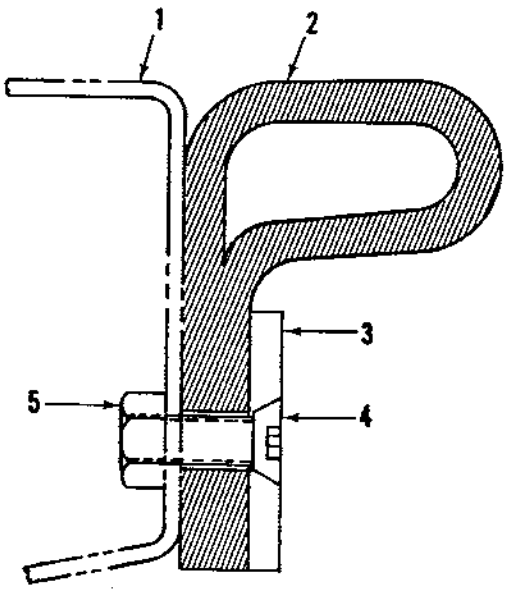

EMC 5-3960-201-35/28

1 Door nose
2 Seal
3 Mounting strips
4 Flat head screw
5 Hex nut

Figure 7-14. Door nose weather seal.

(2) Secure door opening angle assemblies (5, fig. 7-8) to spacers welded to door hinge box (13) with screws (8), washers (7), and nuts (6).

(3) Install end angle assemblies (1, 5, and 6, fig. 7-13), and shim to square with door opening angle assemblies. Provice 2-inch clearance between angle assembly and platform, so that weather seal (2) may be installed.

(4) Secure with nuts (8).

(5) Weld cover plate (1) of end angle assemblies to embedded channel (10) with continuous fillet weld to provide weathertight seal.

(6) Tack weld concrete form pans (8, fig. 7-10) into place.

(7) Pour concrete into form pans.

(8) Install weather seals (2, fig. 7-13) on end angle assemblies (1, 5, and 6), with mounting strips (4) and screws (3). End seals must run entire width of hatchway opening to prevent opening of corner joints when doors are closed.

Note. Apply adhesive (3M type-EC-870) to all seals and mounting strips before installing.

(9) Install seals (5, fig. 7-10) on door opening angle assembly (*a above*) with mounting strips (7) and screws (6).

Note. Install side seals with tight butt joint on end seals.

(10) Install seal (2, fig. 7-14) on door nose with mounting strips (3), screws (4), and nuts (5).

(11) Cement new access cover gasket (4, fig. 7-10) in place around each access opening.

(12) Install access cover plate (1) and secure with screws (3).

7-109. Control and Starter Cabinets

a. Removal.

(1) Turn main power switch to OFF position.

(2) Open doors (9, fig. 7-15) to two starter cabinets (6 and 7) and control relay cabinet (4) by loosing 4 screws (8) on each door.

(3) Disconnect all wiring (1, 3, and 5) entering the three cabinets. All wiring should be coded to the proper terminals, but tag any wires which may not be otherwise identified.

(4) Loosen and remove conduit bushings and conduit locknuts (2) at all conduit entrances.

(5) Pull conduits and all wires from cabinets.

(6) Disconnect and remove wiring which interconnects the three cabinets. Be sure all unmarked wiring is tagged for proper identification.

(7) Remove cabinets (2, 3, and 4, fig. 7-16) one at a time, starting at one end or the other. Remove nuts (6) and bolts (1) from the cabinet.

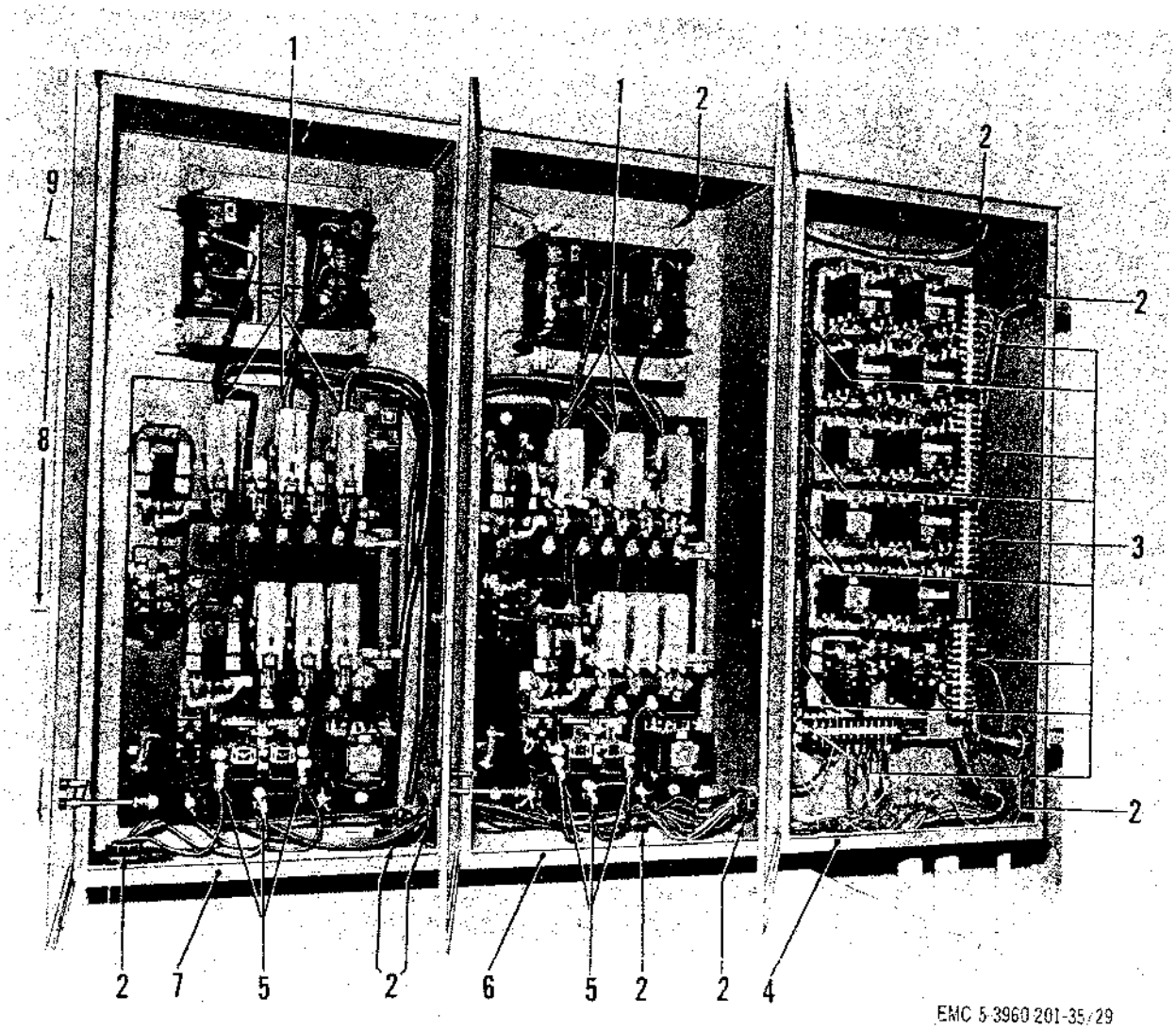

1 Motor starter contactor terminals (incoming power)
2 Conduit bushings and locknuts
3 Control relay cabinet terminals
4 Control relay cabinet
5 Wiring to motors
6 Motor number 1 starter cabinet
7 Motor number 2 starter cabinet
8 Door securing screws
9 Door

Figure 7-15. Electrical control cabinets, showing terminals of external wiring.

Loosen nuts (7) and bolts (8) and lift off cabinets one at a time.

(8) Repeat procedure for remaining cabinets.

b. Installation.

(1) Attach cabinets (2, 3, and 4) to wall brackets (5) by lowering their flanges (9) onto bolts (8). Screw in bolts (1) and nuts (6), and tighten. Tighten bolts (8)and nuts (7).

(2) Install the interconnecting wiring between the cabinets. If any wires are unidentified, refer to the proper wiring diagram (figs. 6-2 through 6-12).

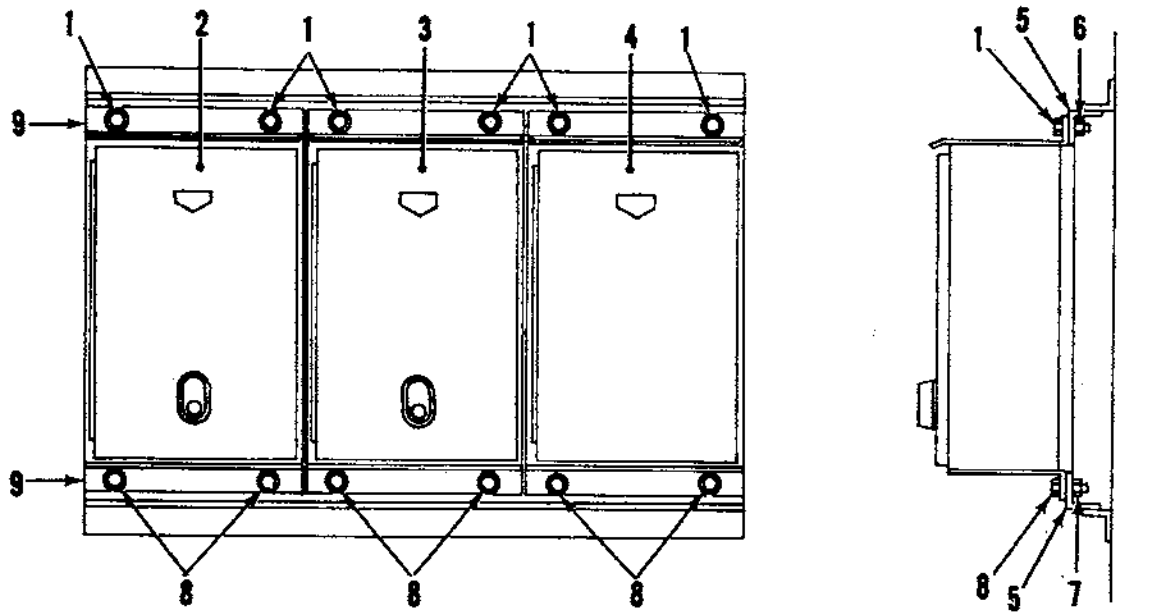

EMC 5-3960-201-35/30

1 Top edge attaching screw
2 Motor number 2 starter cabinet
3 Motor number 1 starter cabinet
4 Control relay cabinet
5 Angle
6 Top edge nut
7 Bottom edge nut
8 Bottom edge attaching screw
9 Cabinet flange

Figure 7-16. Control cabinet, attaching parts.

Note. Wiring diagrams for control and starter cabinets carry the same number as the power unit with which they are associated in the installation.

(3) Using a conduit punch, punch holes in the cabinets where conduits terminate, if holes are not already there.

(4) Insert wiring and conduit ends through holes, and install bushing and conduit locknuts (2, fig. 7-15) on conduit ends.

(5) Connect wiring in control relay cabinet (4) in accordance with identification numbers on wires and terminal strips. Be sure all connections are tight.

Note. When in doubt, refer to proper wiring diagram. Diagram carries same number as power unit.

(6) Connect wiring in starter cabinets (6 and 7) in accordance with wiring diagram. As a final check, start and stop power unit several times, observing that motors are turning in the right direction as noted on the pump nameplates. If motors are not turning in the right direction, turn off main power switch, and reverse T1 and T3 connections (5) in starter cabinets (6 and 7).

(7) Close cabinet doors (9) and secure by tightening screw fasteners (8).

7-110. Master Control Station

a. Removal.

(1) To remove the master control station, remove 14 screws (16), fig. 7-17), and lockwashers (17) that hold the control station cover (8) on the master control station body (1). Remove cover.

(2) Disconnect wiring. All wiring is tagged for identification with terminals.

(3) Remove 4 screws (23) which hold the control to the walls.

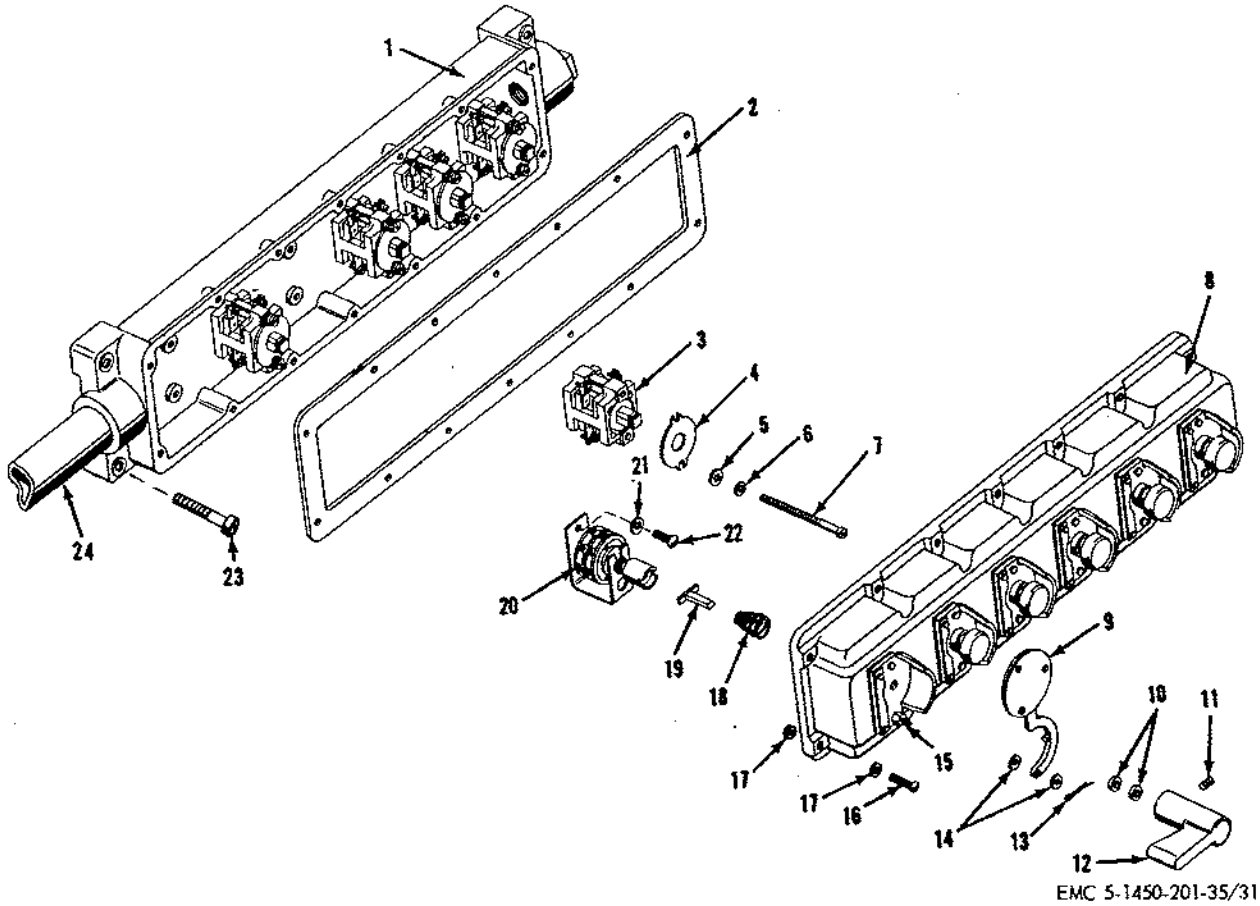

1 Master control station body
2 Rubber gasket
3 Switch assembly
4 Switch retainer
5 Flat washer
6 Lockwasher
7 Mounting screw
8 Master control station cover
9 Selector switch handle locking arm
10 Handle spacer
11 Setscrew
12 Selector switch handle
13 Cotter pin
14 Locking arm spacer
15 Locking arm pivot post
16 Screw
17 Washer
18 T-shaft spring
19 T-shaft
20 Rotary selector switch
21 Lockwasher
22 Screw
23 Station body attaching screw
24 Rigid conduit

Figure 7-17. Master control station, exploded view.

(4) Pull control station body (1) outward to clear the wall.

(5) Unscrew control station body from conduit (24).

b. Installation.

(1) Install master control station body (1) on conduit (24).

(2) Fasten station body to wall with four screws (23).

(3) Connect all wiring to proper terminals. All wires are identified with terminals. If in doubt, refer to proper wiring diagram. The proper diagram carries the same number as the power unit in the installation, (figs 6-2 through 6-12).

(4) Attach control station cover (8) with 14 screws (16) and lockwashers (17)

Be sure all attaching screws are tight.

7-111. Elevator Control Station

a. Removal.

(1) To remove the elevator control station, remove six screws (7, fig. 7-18) and washer (8) which hold cover (6) to control station body (1). Remove cover.

(2) Disconnect wiring. Wires are coded for identification with proper terminals.

(3) Remove four screws (11) which hold control station body (1) to mounting plate. Remove body.

b. Installation.

(1) Run wires through bottom of control station body (1).

(2) Aline body with screw holes on back plate and fasten with four screws (11).

(3) Connect wiring in accordance with wire and terminal coding. If in doubt, check wiring diagram which bears the same number as the power unit in the installation.

(4) Install cover (6) and fasten with six screws (7) and washers (8).

7-112. Limit Switches

a. Removal.

Note. Limit switches are divided into four main groups: Locking bar limit switches, door limit switches, platform limit switches, and elevator limit switches. All are removed in the same manner (11 and 29, fig. 7-11 for typical installations).

(1) Remove five screws (8, fig. 7-19) in cover plate, and lift off cover (7) and seal (9).

(2) Disconnect wiring from terminals (3 and 6). Code for proper identification. Remove four screws from mounting holes (2) which attach switch case (10) to mounting flange.

b. Installation.

(1) Unfasten five screws (8) that hold limit switch cover (7) and rubber seal (9) in place.

(2) Insert four mounting screws through the holes (2) at corners and attach mounting bracket so actuating cam will engage switch lever arm (1).

(3) Connect wiring, referring to proper wiring diagram if in doubt about terminals. All limit switches are the same internally. The proper wiring diagram carries the same number as that found on the power unit (figs. 6-2 through 6-12).

(4) Install cover (7) and seal (9) by screwing in five cover screws (8).

c. Adjustment. Adjust the limit switches (pars. 3-92 through 3-99).

7-113. Elevator Traveling Cable

a. Removal.

(1) Remove 30-foot traveling cable by disconnecting it from junction boxes at each end. These junction boxes are located at the aft end of the installation. The cable is the interconnecting line to the elevator mounted electrical equipment, including the limit switches and the elevator control station.

(2) Be sure to code all wiring and terminals.

Note. The traveling cable is interrelated with contractor supplied and installed components. Exact position of these components will vary with individual installing contractors. Keep a record of colors and terminal numbers for wiring to platform junction box

b. Installation.

(1) Strip rubber outer jacket from both ends of 30-foot traveling cable, exposing 10 inches of leads.

(2) Run cable into junction boxes.

(3) Cut individual color coded wires to lengths required. Strip about 3/4 inch of insulation from each end and install stake-on terminals.

(4) Connect wires to terminals, and secure all cable clamps, bushings, and locknuts.

7-114. Embedded Items

a. Removal.

(1) Remove sections of anchoring assemblies (2, fig. 7-10) and (10, fig. 7-13) and embedded backing plates (3,

CHAPTER 2

INSTALLATION AND OPERATION INSTRUCTIONS

Section I. SERVICE UPON RECEIPT OF EQUIPMENT

2-1. General

When these special purpose elevators become military property, they are ready, in all respects for immediate operational use. Areas near all functioning and moving parts should be inspected to be sure no materials or tools have been left where they might damage the equipment or become hazards to personnel safety. Prior to initial operation, insure that the following valves are positioned as shown in table 2-1.

Table 2-1. Preoperational Valve Positions

Valve	Position
Tank Return Shutoff Valve	Open
Pump #2 Shutoff Valve	Open
Pump #1 Shutoff Valve	Open
Door Shutoff Valves	Open
Locking Bar Shutoff Valves	Open
Shutoff Valve to Main Plunger	Open
Door Drain Valves	Closed
Filter and Flushing Valve	Closed
Reservoir Drain Valve	Closed

2-2. Inspecting and Servicing Equipment

a. Inspection.

(1) Inspect the sight glasses (16 and 18, fig. 1-2) on the front of the power unit, and the hydraulic pressure gage (5) at the rear of the power unit. The small round gage (18) indicates hydraulic fluid level. With the equipment in position, elevator down on pedestals, and doors closed, the level should be near the center of the gage; but the equipment will function properly as long as the level is below the top edge of the higher indicating bar, and above the bottom edge of the lower indicating bar. The tubular shaped gage (16) will indicate presence of water or residue in the reservoir. The hydraulic fluid is normally red. If it is cloudy or pink, this indicates the presence of water in the fluid.

(2) Inspect the lubrication points identified in the current lubrication order. These points are lubricated at the time of delivery and installation, but will require subsequent attention.

(3) Make a visual check of the elevator control station (1, fig. 2-1) on the left forward corner of the platform, the master control station (1, fig. 2-2), the control power switch (3, fig. 1-2), motor starter cabinets (1 and 2) and control relay cabinet (4) for loose mounting and corrosion.

(4) Before operating the equipment, see that the doors are closed, and that the locking bars are fully retracted. The elevator should be resting on all four pedestal leveling jacks (12, fig. 1-3), and the main power switch lever (6, fig. 2-3) should be OFF (furthest clockwise position).

(5) Check the manually operated valves to see that they are in the positions indicated by table 2-1.

(6) Inspect the platform for proper mounting on the plunger. The platform should float on the plunger. If the attaching bolts are too tight, the platform cannot be leveled with the equalizer cables; if the bolts are too loose, there is a possibility of shearing.

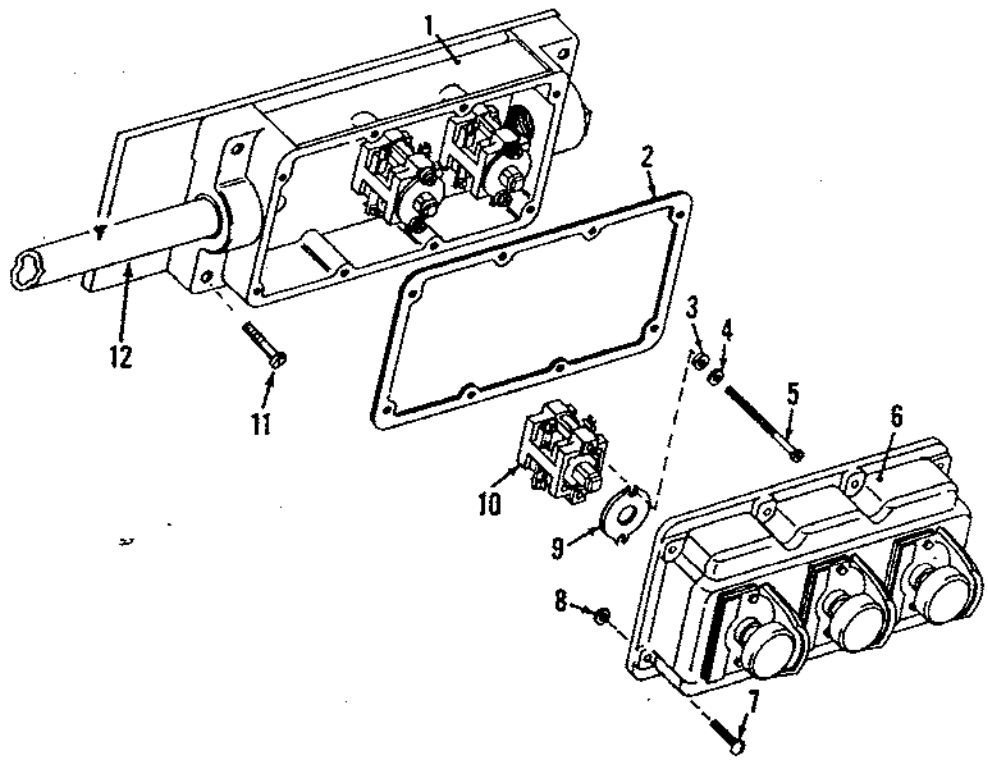

EMC 5-1450-201-35/32

1	Elevator control station body	7	Screw
2	Rubber gasket	8	Flat washer
3	Flat washer	9	Switch retainer
4	Lockwasher	10	Switch assembly
5	Mounting screw	11	Switch body attaching screw
6	Elevator control station cover	12	Rigid conduit

Figure 7-18. Elevator control station, exploded view.

fig. 7-9), by cutting out with acetylene torch.

Note. It is necessary to cut circles around protruding bolts to remove embedded backing plates.

(2) Remove embedded anchor bolts for locking bar support brackets (19, fig. 7-11) and door hinge boxes, (24, fig. 7-9) by cutting off with acetylene torch.

(3) Remove anchoring bolts for pedestal jacks (8, fig. 7-12) and main cylinder support (18, fig. 7-7) by breaking away sufficient concrete to free bolts.

b. *Installation.*

(1) Install sections for anchoring assemblies (2, fig 7-10) and (10, fig. 7-13), and hinge backing plates (3, fig. 7-19) by welding in new sections. If it has been necessary to chip away any concrete, replace with new concrete when welding is complete.

(2) Install embedded anchor bolts for locking bar support brackets (19, fig. 7-11) and door hinge boxes (24, fig. 7-9) by welding on new threaded ends.

(3) Install anchor bolts (8, fig. 7-12 for pedestal jacks and main cylinder support (18, fig. 7-7). Pour new concrete and allow to harden a minimum of 48 hours.

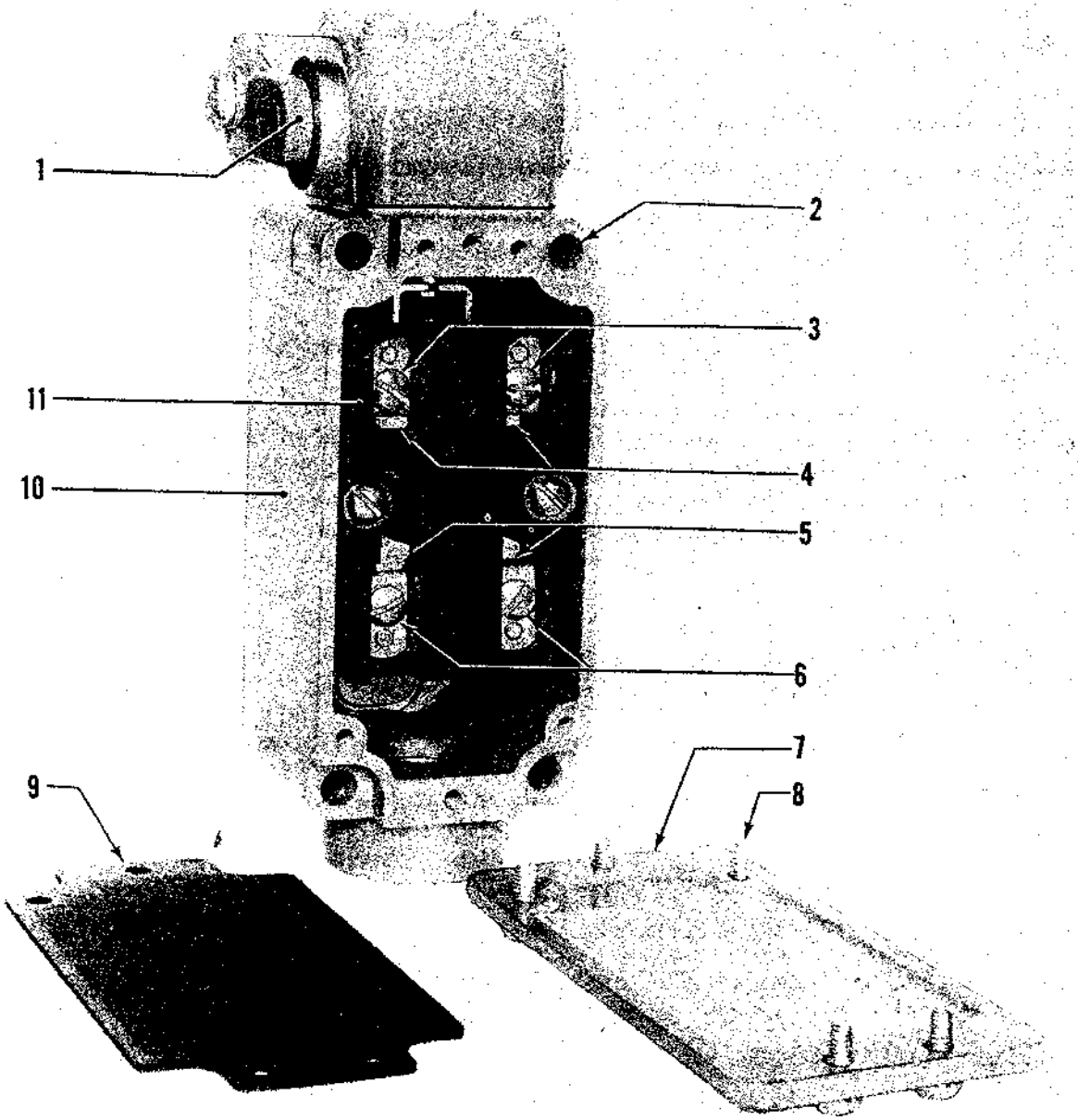

EMC 5-3960-201-35/33

1 Switch lever arm
2 Mounting holes
3 Normally open terminals
4 Normally open contacts
5 Normally closed contacts
6 Normally closed terminals
7 Switch cover
8 Cover screw
9 Rubber seal
10 Switch case
11 Switch body

Figure 7-19. Typical limit switch, interior view.

CHAPTER 8

HYDRAULIC SYSTEM REPAIR INSTRUCTIONS

8-1. Hydraulic Pump Assembly

a. General. Two internal gear rotary pumps (6, 16, fig. 7-1) supply hydraulic pressure for the elevator equipment. The pumps are driven through V-belts (42, 65) by electric motors (44, 66). Figures 7-1, 7-2, 7-3, and 7-4 illustrate power units NE-50000, NE-50004, NE-50008, NE-50009, NE-05510, and NE-5007. These figures show variations found among the several units. All are similar in general function; removal and installation procedures are the same. For purposes of simplicity, figure 7-1, power unit NE-50004, is used in *b* below.

b. Removal and Disassembly.

(1) Close gate valve (40, fig. 7-1) between pump number 1 (6) and suction strainers (3) in tank (72). Close gate valve (108) in pipe flange assembly (74). Close gate valve (63) to pump number 2 (16).

(2) Remove V-belts (42) and sheave (54) (par. 9-14).

(3) Remove pressure relief valve (50) (par. 8-4).

(4) Remove attaching parts (46) securing pump (6) to mounting base.

(5) Remove nuts and bolts securing pump suction assembly (41).

(6) Remove nuts and bolts securing pump discharge assembly (53).

(7) Using a crowbar, loosen pump (6) from mounting base, and remove.

(8) Remove gasket (5) from suction and discharge pump flanges.

Note. Disassemble pump in an area free of dirt, dust, and excessive moisture. Use only clean wiping rags. Use extreme care to keep all parts clean after disassembly, and during handling. Parts such as gears and other parts with fine surfaces should be handled only on wood or masonite-covered benches to avoid unnecessary scratching, denting or other damage. After rebuilding and before assembling into power unit, pump openings should be temporarily plugged with masking tape.

(9) Straighten the tangs of bearing nut lockwasher (21, fig. 8-1). Remove bearing locknut (20) and bearing nut lockwasher (21).

(10) Remove nuts (1) and washers (2) holding shaft seal housing (26) to front side plate (17).

(11) Slide shaft seal housing (26) off drive shaft (15). Slide adapter ball bearing (22) from shaft seal housing (26).

(12) Pull rubber bellows and retainer assembly (30) with carbon seal washer (29) attached, spring (31), and spring retainer washer (32) off drive shaft (15).

(13) Remove floating seat (28) and rubber seat ring (27) from shaft seal housing (26).

(14) Remove front roller bearings (33) from front side plate (17).

(15) Remove lubrication fitting (24) from shaft seal housing (26).

(16) Remove shaft seal housing gasket (18).

(17) With a center punch, punch a set of matching alinement marks on front side plate (17) and pump body (12), and on rear side plate (9) and pump body (12).

(18) Remove nuts (7) and washers (8) holding front side plate (17) to pump body (12).

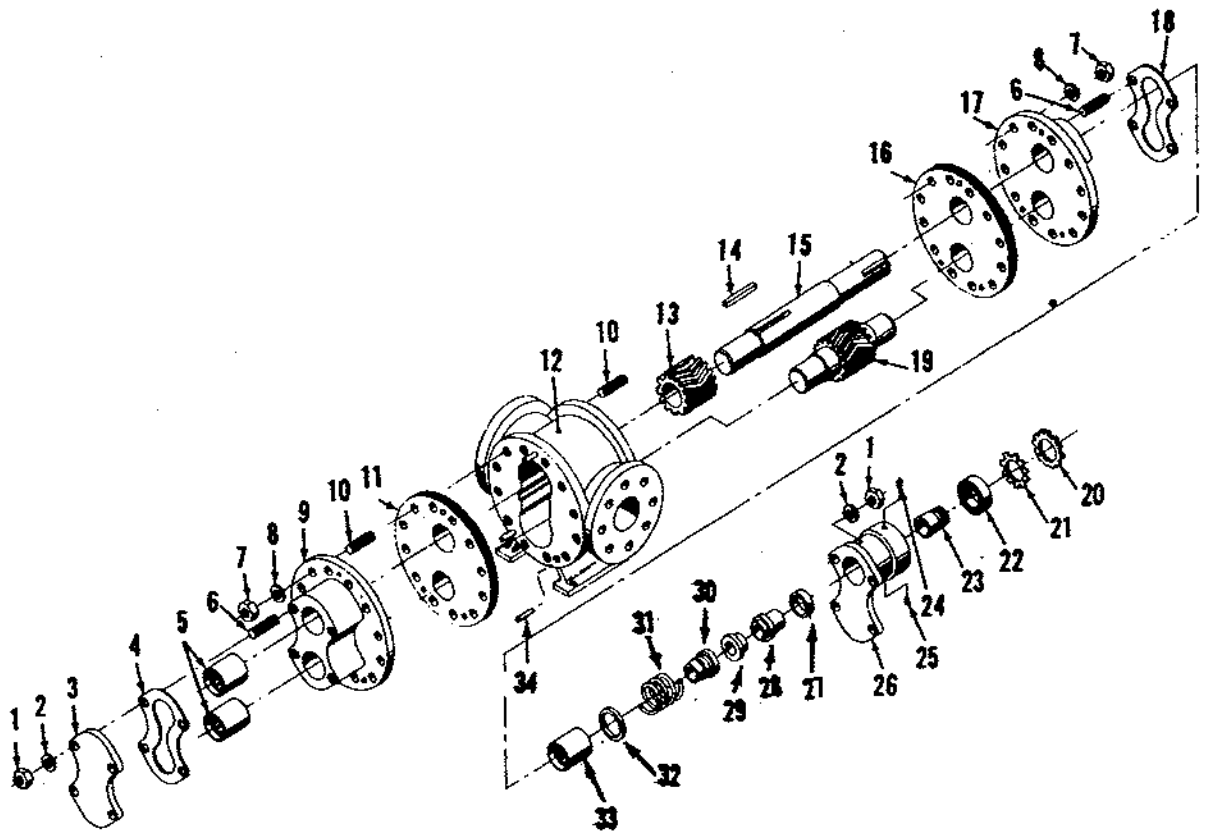

1 Nut, hex
2 Washer, flat
3 Bearing cover
4 Bearing cover gasket
5 Roller bearings
6 Stud
7 Hex nut
8 Flat washer
9 Rear side plate
10 Stud
11 Wear plate
12 Pump body
13 Drive shaft gear
14 Drive shaft key
15 Drive shaft
16 Wear plate
17 Front side plate
18 Seal housing gasket
19 Driven shaft gear
20 Bearing locknut
21 Bearing nut lockwasher
22 Adapter ball bearing
23 Tapered sleeve
24 Lubrication fitting
25 Drain plug
26 Shaft seal housing
27 Rubber seat ring
28 Floating seat
29 Carbon sealing washer
30 Rubber bellows and retainer assembly
31 Spring
32 Spring retainer washer
33 Front roller bearing
34 Dowel pin

Figure 8-1. Hydraulic pump, exploded view.

(19) Install jackscrews in each hole of front side plate (17). Take off alternately to back front side plate evenly off pump body (12).

(20) Remove wear plate (16).

(21) Remove drive shaft (15). Gear (13) and gear (19) will come out of pump body (12) with the shaft.

(22) Remove nut (1) and washer (2) holding bearing cover (3) to rear side plate (9).

(23) Remove bearing cover (3) and bearing cover gasket (4).

(24) Remove rear roller bearings (5).

(25) Remove nut (7) and washer (8) holding rear side plate (9) to pump body (12).

(26) Install jackscrews in each hole of rear side plate (9). Take up alternately to back rear side plate off evenly.

(27) Remove wear plate (11).

(28) Pull drive shaft gear (13) from drive shaft (15), and remove key (14) from shaft.

(29) Remove stud (10) from pump body (12), and stud (6) from side plates (9, and 17).

c. *Cleaning, Inspection, and Repair.*

(1) Clean all metal parts with potable water and dry thoroughly.

(2) Inspect all surfaces for nicks, burs, scoring, excessive wear, and cracks. If more than minor dressing up or lapping is required, and if other damage is extensive, replace defective parts.

(3) If wear is excessive (over 0.005 inch), replace gears and bearings.

(4) Replace all gaskets.

(5) When a mechanical seal has been dismantled for inspection, it is virtually impossible to reassemble the parts into their original position. Therefore, if a new seal assembly is not used, lap the seal as follows:

(*a*) Press the face of carbon sealing washer (29) lightly but firmly against the lapping paper and describe a series of about five figure eights.

Note. Use fine lapping paper such as 3M No. 600 or equivalent, and a flat lapping plate.

(*b*) Keep the seal flat and avoid rocking.

(*c*) Rotate seal face 90° and describe five more figure eights.

(*d*) Repeat this procedure at 90° intervals until face is clean.

(6) This procedure also applies for floating seat (28). More strokes may be required since this material is cast iron.

d. *Reassembly and Installation.*

(1) Position drive key shaft (14, fig. 8-1) in keyway on shaft (15); and with a soft-faced hammer, force gear (13) into position on drive shaft.

(2) Install stud (10) in pump body (12). Screw stud (6) into plates (9 and 17).

Note. Apply thin coat of Plasgon to mating surfaces. Avoid application to other than contact surfaces.

(3) Insert roller bearing (5) in rear side plate (9).

(4) Install wear plate (11).

(5) Place rear side plate (9) in position on pump body (12). Aline with marks previously made. Secure with nut (7) and washer (8).

(6) Position bearing over gasket (4) on face of rear side plate (9), and install bearing cover (3). Secure with nut (1) and washer (2).

Note. Before bearing cover is installed, see that the balancing plug is on the discharge side of the pump.

(7) Intermesh driveshaft gear (13) with driven shaft gear (19). Slide gears into pump body (12).

(8) Insert roller bearings (23) into side plate (17).

(9) Place side plate (17) and wear plate (16) in position on pump body (12). Check alinement with marks previously made. Secure with nut (7) and washer (8).

(10) Install rubber seat ring (27) on floating seat (28). Oil outer surface of rubber seat ring, and install assembly in shaft seal housing (26). Be sure this assembly is firmly seated.

Caution: **Use brass or bakelite sleeve to insert seat (28). Do not damage face of seat.**

(11) Slide spring retainer washer (32) on drive shaft (15) and center spring (31) on spring retainer washer.

(12) Oil drive shaft. Slide rubber bellows and retainer assembly (30) in position on drive shaft. Insert carbon sealing washer (29) in retainer assembly (30).

Caution: **If new seal assembly is being used, the new spring may differ slightly from the old one in length. This does not affect tension in the compressed position. It is advisable to install carbon sealing washer (29), last, to avoid damaging the lapped face.**

(13) Place seal housing bracket (18) between front side plate (17) and shaft seal housing (26). Install shaft seal housing (26) on drive shaft (15).

Note. Before shaft seal housing is installed, see that the balancing plug in the side plate is on the discharge side of the pump.

(14) Install shaft seal housing on dowel pins (34) of front side plate (17), and secure with nuts (1) and washers (2).

(15) Fit adapter ball bearing (22) into bore of shaft seal housing (26). If necessary, buff out housing bore to assure sliding fit.

(16) Remove adapter ball bearing. Install tapered sleeve (23) on drive shaft (15). Slide adapter ball bearing on drive shaft until it seats against shoulder in shaft seal housing.

(17) Place bearing nut lockwasher (21) on drive shaft (15), and install bearing locknut (20) on tapered sleeve (23).

(18) Tighten bearing locknut to secure tapered sleeve and bearing (22).

Note. If bearing locknut (20) is drawn up too tightly, bearing (22) will bind.

(19) Adjust bearing locknut to correct any binding.

(20) Bend over one tang of bearing nut-lockwasher (21) into corresponding slot in bearing locknut (20).

(21) Install lubrication fitting (24) in top of shaft seal housing, and lubricate (LO 5-1450-201-15-1 and -2).

(22) Slide pump (6, fig. 7-1) into mounting position in power unit. Aline pump mounting holes with holes in mounting base, and secure with capscrews (46).

(23) Install new gasket (5) between pump inlet flange and pipe suction assembly (41).

(24) Secure pump suction flange to suction assembly (41).

(25) Repeat (2) and (3) above, attaching pump discharge flange to pipe assembly (7).

(26) Install pressure relief valve (50) (par. 8-4).

(27) Install pump drive sheave (54) and V-belts (42) (par. 9-14).

(28) Open gate valve (40) between pump (6) and suction strainers (3). Open gate valve (108) and gate valve (63) to pump number 2 (16).

(29) Check liquid level and sight gage (17, fig. 3-24). Add hydraulic fluid to reservoir (16) if necessary.

8-2. Door Operating Four-Way Valve

a. General. The door four-way valve (14, fig. 7-1) is a spring centered, double solenoid type valve. The operation of this valve in the hydraulic system controls opening and closing of the elevator doors. Figures 7-1, 7-2, 7-3, and 7-4 illustrate power units, NE-50000, NE-50004, NE-50008, NE-50009, NE-50010, and NE-5007. These figures show variations found among the several units. All are similar in general function; removal and installation procedures are the same. For purposes of simplicity, figure 7-1, power unit NE-50000, is used in paragraph 8-2*b* for reference.

Note. Power units NE-50000 and NE-5007 are used on storage elevators only.

b. Removal and Disassembly.

(1) Close gate valves (40, 63, 108, fig. 7-1).

(2) Close the two door cylinder shutoff valves (4, 5, fig. 3-26). Open the two drain valves (7, 8), and drain hydraulic fluid into clean container.

(3) Loosen two unions (6) at valve port connections, and two unions (18) above and below the valve.

(4) Disconnect copper tubing (96, fig. 7-1) at elbow (98).

(5) Remove mounting screws (1, fig. 8-2) holding terminal board cover (2) to solenoid coil housing (25). Pull off terminal board cover.

(6) Disconnect wire leads from terminal board.

(7) Remove attaching parts (58, fig. 7-1) from valve body.

(8) Lift out valve (14).

(9) Remove pipe nipples from four-way valve.

(10) Remove capscrew (8, fig. 8-2) which secure pilot body (12) to spring housing (19).

(11) Remove pilot body and pull O-rings (26 and 28) from pilot body. Remove dowel pin (27).

(12) Remove cover screw (33) and lockwashers (32) from solenoid housing cover (35), and remove cover.

(13) Pull off rubber plug (34) and gasket (36) from solenoid housing cover.

(14) Remove screws (31) and lockwashers (30) to separate solenoid assembly (37) and solenoid housing (25).

(15) Disconnect wire leads coming from solenoid assembly (37) at terminals on terminal board (3).

(16) Remove mounting screws (1) to separate terminal board (3) from solenoid housing (25).

(17) Pull terminal board gasket (4) from solenoid housing, and remove grommets (5).

(18) Detach solenoid housing (25), by removing screws (38). Remove washers (6) and gasket (7).

(19) Remove O-ring plug (17) from pilot body (12) and remove O-ring (16) from plug (17).

(20) Pull out spring (15) and pilot plunger (14). Remove O-ring (13) from pilot plunger.

Note. In removing pilot plunger (14), it will be necessary to push it up from the bottom.

(21) Remove plug (9) from pilot body (12).

(22) Remove plugs (11) from pilot body and pull O-ring (10) off each plug.

(23) Remove capscrews (18) to detach spring housing (19) from valve body (24).

(24) Pull O-rings (21 and 29) from valve body.

(25) Remove valve spring (20) and stop washer (22) from valve body (24).

(26) Pull valve spool (23) out of valve body (24).

(27) Disassemble the second half of four-way valve by repeating the above procedure.

c. Cleaning, Inspection, and Repair.

(1) Clean all parts with potable water and dry thoroughly.

(2) Inspect all parts for excessive wear, cracks, nicks, burs, scoring, and deformation. Inspect for thread damage.

(3) Dress up minor nicks, burs, and thread damage with a small file.

(4) Replace defective parts as necessary.

d. Reassembly and Installation.

(1) Slide valve spool (23) into bore of valve body (24), and install stop washers (22) on ends of valve spool.

(2) Place O-rings (21) in recess of valve body (24). Slide valve springs (20) into position on end of valve spool (23). Center the spring on stop washer (22).

(3) Install O-ring (29) in recessed oil hole on face of spring housing (19). Position spring housing against valve body (24), and secure with capscrews (18).

(4) Place O-ring (26) in recess on spring housing (19), and place O-ring (28) in recessed oil hole in face of pilot body (12).

(5) Screw plug (9) into pilot body (12).

(6) Place O-ring (13) in groove on pilot plunger (14), and O-ring (16) in groove on plug (17).

(7) Insert pilot plunger (14) in bore of pilot body (12).

(8) Position spring (15) on top of pilot plunger, and install plug (17) in pilot body (12).

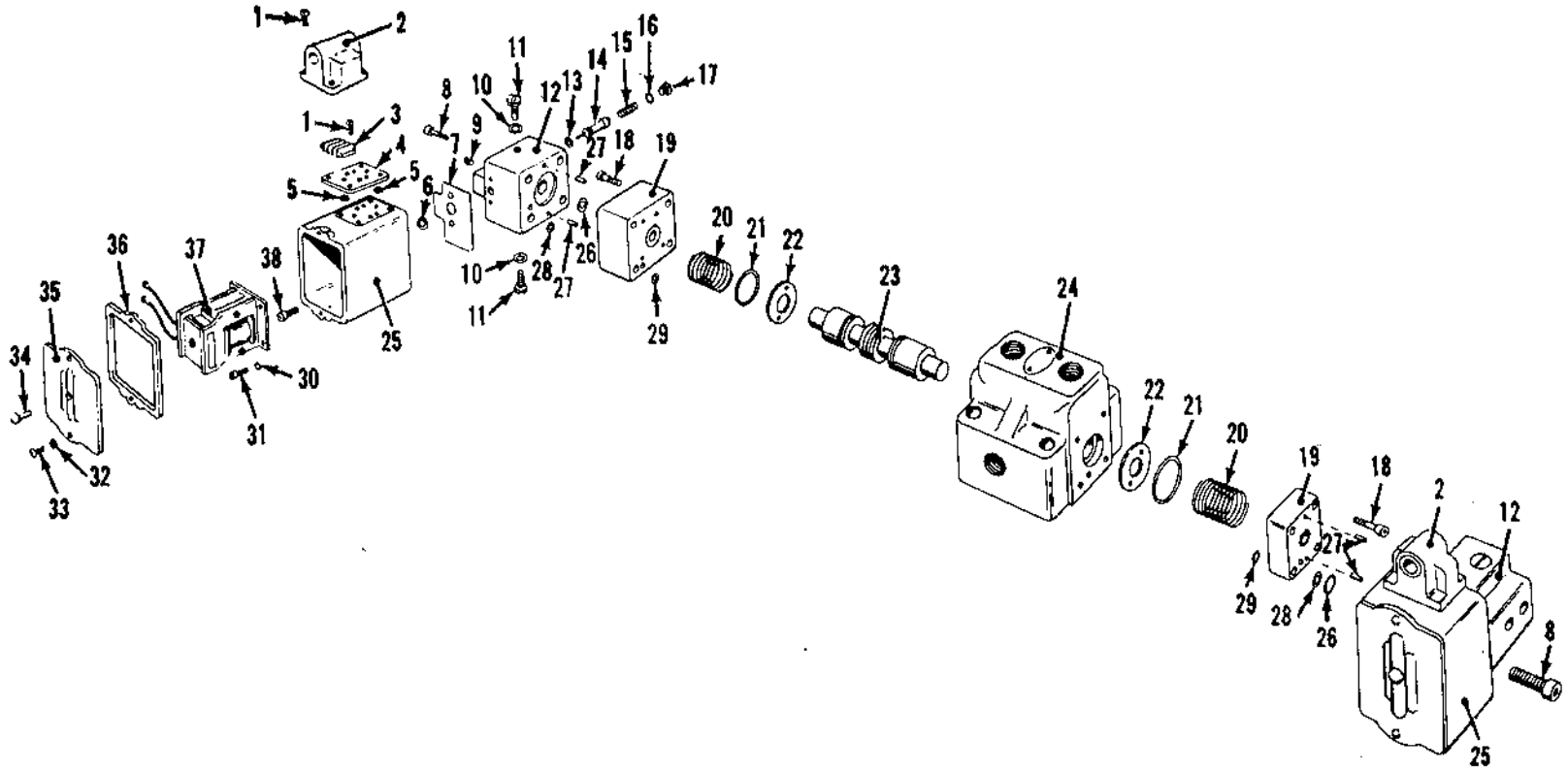

1 Screw
2 Terminal board cover
3 Terminal board
4 Gasket terminal board
5 Grommet
6 Flat washer
7 Pilot body gasket
8 Capscrew
9 Pilot body plug
10 O-ring
11 O-ring plug
12 Pilot body
13 O-ring
14 Pilot plunger
15 Pilot plunger spring
16 O-ring
17 O-ring plug
18 Capscrew
19 Spring housing
20 Valve spring
21 O-ring

Figure 8-2. Door four-way valve, exploded view.

22 Stop washer
23 Valve spool
24 Valve body
25 Solenoid coil housing
26 O-ring
27 Dowel pin
28 O-ring
29 O-ring
30 Lockwasher
31 Solenoid mounting screw
32 Lockwasher
33 Cover screw
34 Solenoid housing cover plug
35 Solenoid housing cover
36 Solenoid housing cover gasket
37 Solenoid assembly
38 Housing screw

Figure 8-2—Continued.

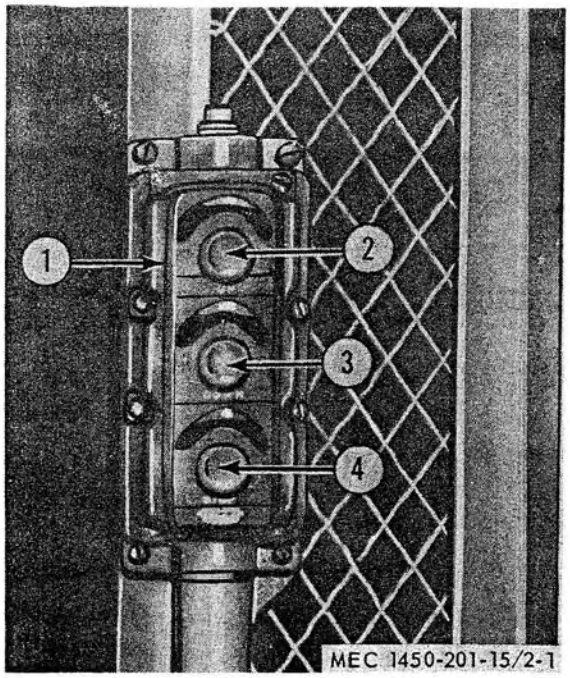

1 Elevator control station
2 Elevator UP button
3 Elevator DOWN button
4 STOP button

Figure 2-1. Elevator control station.

(7) Inspect the main cylinder for scars and nicks. Check the tolerance between the main cylinder and the wiper ring. Tolerance should be 0.010 inch.

(8) Check the hydraulic fluid in the drip pan. There should always be approximately 8 ounces of hydraulic fluid in the pan.

(9) Inspect the piping and couplings for evidence of breaks or leaks and inspect all cables for breaks or frays.

(10) Refer to the basic issue items list (app B) and make sure all items listed are with the unit and in serviceable condition.

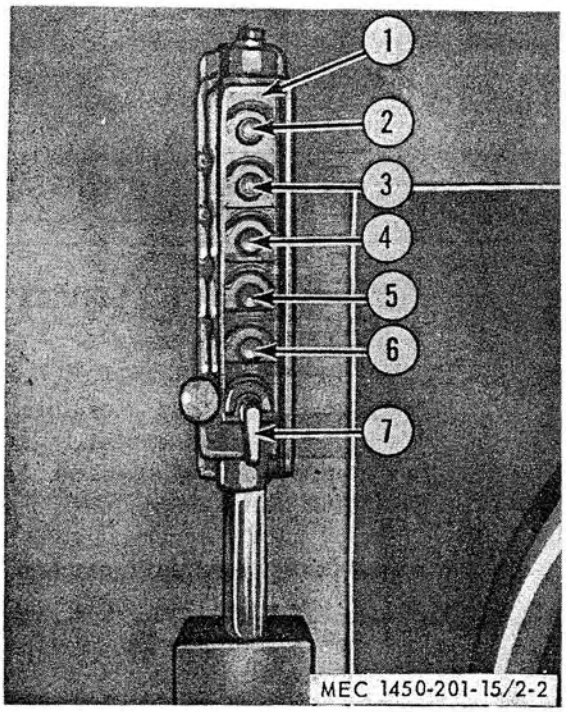

1 Master control station
2 DOORS OPEN button
3 DOORS CLOSE button
4 ELEVATOR UP button
5 ELEVATOR DOWN button
6 STOP button
7 ROTARY SELECTOR switch

Figure 2-2. Master control station.

b. Servicing.

(1) Perform the daily preventive maintenance services (par. 3-7).

(2) Perform the quarterly preventive maintenance services (par. 3-8).

(3) Lubricate in accordance with current lubrication order.

(9) Slip O-rings (10) in grooves on plugs (11), and install plugs in threaded holes in pilot body (12).

(10) Position gasket (7) on pilot body (12). Insert washer (6) in recess on face of solenoid housing (25), and secure solenoid housing to pilot body with screws (38).

(11) Insert grommets (5) in holes in solenoid housing (25), and place terminal board gasket (4) in position on solenoid housing.

(12) Pass wire leads from solenoid assembly (37) through grommets (5) and terminal board gasket (4).

(13) Connect wire leads to terminal board (3), and mount terminal board on solenoid housing (25) with screws (1).

(14) Place solenoid assembly (37) inside solenoid housing (25), and secure with screws (31) and lockwashers (30).

(15) Install plug (34) in solenoid housing cover (35), and position gasket (36) on solenoid housing (25).

(16) Position solenoid housing cover (35) on solenoid housing (15), and secure with screws (33) and lockwashers (32).

(17) Insert dowel pins (27) in pilot body (12). Place pilot body on spring housing (19), and secure with capscrews (8).

(18) Assemble the second half of four-way valve by repeating (2) through (17) above.

(19) Screw pipe nipples into valve.

(20) Position four-way valve (14, fig. 7-1) against support bracket (30), and secure with attaching parts (58).

(21) Connect wire leads from cable to terminal board (3, fig. 8-2) on solenoid coil housing (25), and install terminal board cover (2) with screws (1). Connect cable to solenoid coil housing (25).

(22) Install copper tubing (96, fig. 7-1) and elbow (98) on pilot bodies (fig. 8-2).

(23) Connect unions (6, 18, fig. 3-26).

(24) Close drain valve (7, 8). Open doo cylinder shutoff valves (4, 5).

(25) Open gate valves (40, 63, 108, fig 7-1).

(26) Bleed air from cylinders (par. 3-125)

8-3. Locking Bar Four-Way Valve

a. General. The locking bar four-way valve is a spring centered, double solenoid type valve. The operation of these valves in the hydraulic system applies pressure at the locking bar cylinders. Figures 7-1, 7-2, 7-3 and 7-4 illustrated power units NE-50000, NE-50004, NE-50008, NE-50009, NE-50010, and NE-5007. These figures show variations found among the several units. All are similar in general function; removal and installation procedures are the same. For purposes of simplicity, figure 7-1, power unit NE-50004, is used in paragraph 8-3*b* for reference.

Note. Power units NE-50000 and NE-5007 are used on storage elevators only.

b. Removal and Disassembly.

(1) With elevator on pedestals, close gate valves (40, 63, 108, fig. 7-1).

(2) Close shutoff valves (1, 2, fig. 3-26) and disconnect unions (3). Drain fluid into clean container.

(3) Disconnect copper tubing at elbows (109, fig. 7-1). Remove elbows from pilot bodies (20, fig. 8-2).

(4) Remove mounting screws (9, fig. 8-3) from terminal board cover (10). Remove cover.

(5) Disconnect wire leads from terminal board (11).

(6) Remove attaching parts (86, fig. 7-1), and lift locking bar four-way valve (19) from mounting bracket (91).

(7) Remove capscrews (16, fig. 8-3) securing pilot body (20) to valve (32).

(8) Remove pilot body, and pull off O-rings (26, 33).

(9) Remove cover screws (1) and lockwashers (2) from solenoid housing cover (4), and remove cover. Pull out rubber plug (3) and gasket (5) from solenoid housing cover.

(10) Remove screws (35) and lockwashers (34) to separate solenoid assembly (6) from solenoid housing (8).

(11) Disconnect wire leads from solenoid assembly (6) at terminals on terminal board (11).

(12) Remove screws (9) to separate ternal board (11) from solenoid housing (8).

(13) Pull gasket (12) from solenoid housing and remove grommets (13).

(14) Remove screws (7) holding solenoid housing (8) to pilot body (20).

(15) Remove washer (14) and gasket (15).

(16) Remove O-ring plug (25) from pilot body (20) and pull off O-ring (24) from plug.

(17) Pull spring (23) and pilot plunger (22) from pilot body (20). Pull O-ring (20) from pilot plunger.

Note. In remaining pilot plunger (22) it will be necessary to push it up from the bottom.

(18) Remove plug (17) from pilot body.

(19) Remove plugs (19) from pilot body (20), and pull O-ring (18) off each plug.

(20) Remove shoulder bolt (30) from pilot (20), and slide valve spring (27), spring retainer washer (28), and lockwasher (29) off shoulder bolt.

(21) Pull valve spool (31) out of valve body (32).

(22) Disassemble the second half of four-way valve by repeating the above procedure.

c. Cleaning, Inspection, and Repair.

(1) Clean all metal parts with potable water and dry thoroughly.

(2) Inspect all parts for excessive wear, cracks, nicks, burs, scoring, and deformation. Inspect for thread damage.

(3) Dress up minor nicks, burs, and thread damage with a small file.

(4) Replace all defective parts as necessary.

d. Reassembly and Installation.

(1) Slide valve spool (31) into valve body (32).

(2) Position spring retainer washer (28) on shoulder bolt (30) and position valve spring (27) on spring retainer washer.

(3) Place lockwasher (29) on shoulder bolt (30) and install in pilot body (20).

(4) Install O-rings (18) in groove on plugs (19), and install plugs in pilot body (20).

(5) Install plug (17) and pilot body (20).

(6) Install O-ring (21) in groove on pilot plunger (22) and O-ring (24) in groove on O-ring plug (25).

(7) Insert pilot plunger (22) in bore of pilot body (20). Place spring (23) on top of pilot plunger, and install O-ring plug (25) in pilot body.

(8) Place O-ring (26 and 23) in recessed grooves on pilot body (20).

(9) Place gasket (15) on pilot body (20).

(10) Insert washer (14) in recess on face on solenoid housing (8), and secure solenoid housing to pilot body with screws (7).

(11) Insert grommet (13) into solenoid housing (8), and position terminal board gasket (12) on solenoid housing.

(12) Pass wire leads from solenoid assembly (6) through gormmets (13) and terminal board gasket (12).

(13) Connect wire leads to terminal board (11), and mount terminal board on solenoid housing (8) with screws (9).

(14) Place solenoid assembly (6) inside solenoid housing (8), and secure with screws (35) and lockwashers (34).

(15) Install plug (3) in solenoid housing cover (4), and place gasket (5) in position on housing (8).

(16) Secure housing cover to housing with screws (1) and lockwashers (2).

(17) Secure pilot body (20) on valve body (32) with capscrews (16).

(18) Reassemble second half of four-way valve by repeating (2) through (17) above.

(19) Tighten unions (3, fig. 3-26) connecting locking bar lines.

(20) Secure four-way valve (19, fig. 7-1) to mounting bracket (91) with attaching parts (86).

(21) Connect wire leads from flexible conduit to terminal board (11, fig. 8-3) on solenoid housing (8), and

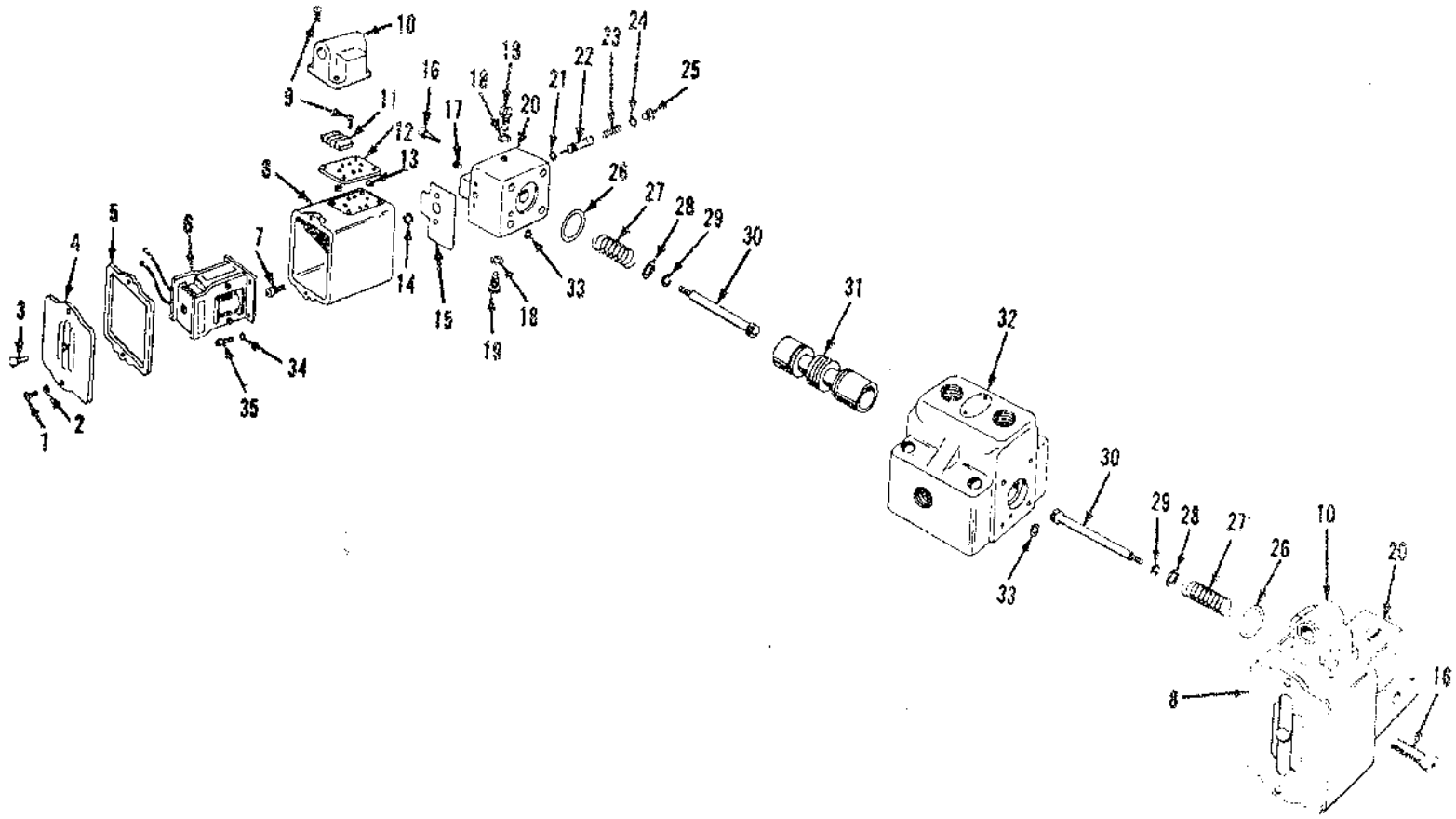

1 Cover screw
2 Split lockwasher
3 Solenoid housing cover plug
4 Solenoid housing cover
5 Solenoid housing cover gasket
6 Solenoid assembly
7 Housing screw
8 Solenoid housing
9 Screw
10 Terminal board cover
11 Terminal board
12 Terminal board gasket
13 Grommet
14 Flat washer
15 Pilot body gasket
16 Capscrew
17 Pilot body plug
18 O-ring
19 O-ring plug
20 Pilot body
21 O-ring
22 Pilot plunger
23 Pilot plunger spring
24 O-ring

Figure 8-3. Locking bar four way valve, exploded view.

25 O-ring plug
26 O-ring
27 Valve spring
28 Spring retainer washer
29 Lockwasher
30 Shoulder bolt
31 Valve spool
32 Valve body
33 O-ring
34 Lockwasher
35 Solenoid mounting screw

Figure 8-3—Continued.

install terminal board cover (10) (10) with screws (9). Connect flexible conduit to solenoid housing on opposite end of the valve.

(22) Install elbow (109, fig. 7-1) on pilot bodies, and connect copper tubing.

(23) Open shutoff valves (1, 2, fig. 3-26) and open gate valves (40, 63, 108, fig. 7-1).

(24) Bleed lines (par. 3-125).

8-4. Hydraulic Pump Relief Valve

a. General. The pump relief valves are spring-loaded type valves installed between pump suction and discharge ports to prevent damage to electrical or hydraulic components in the event of a rapid pressure buildup. Figures 7-1, 7-2, 7-3, and 7-4 illustrate power units NE-50000, NE-50004, NE-50008, NE-50009, NE-50010, and NE-5007. These figures show variations found among the several units. All are similar in general function; removal and installation procedures are the same. For purposes of simplicity, figure 7-1, power unit NE-50000, is used in paragraph 8-4*b* for reference.

Note. Power units NE-50000 and NE-5007 are used for storage elevators only.

b. Removal and Disassembly.

(1) Remove relief valve on pump number 1 (6, fig. 7-1) by disconnecting unions (48, 52) on suction and discharge sides of relief valve (50). Remove relief valve with pipe nipples (49, 51) attached.

(2) Remove nipples from relief valve.

(3) Repeat (1) and (2) above to remove relief valve on pump number 2 (16).

(4) Remove valve cap (1, fig. 8-4) from valve bonnet (5).

(5) Remove gasket (2).

(6) Remove adjusting screw (3) and adjusting screw locknut (4) from valve bonnet (5).

(7) Remove valve bonnet (5) from valve body (15), and lift valve bonnet gasket (6) from valve body.

(8) Lift upper spring retainer (7), valve spring (8), and lower spring retainer (9) out of valve body (15).

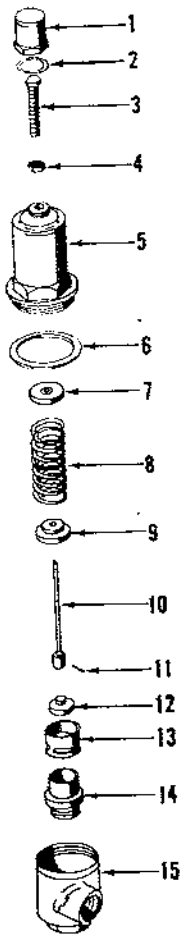

1 Valve cap
2 Valve cap gasket
3 Pressure adjusting screw
4 Pressure adjusting screw locknut
5 Valve bonnet
6 Valve bonnet gasket
7 Valve spring upper retainer
8 Valve spring
9 Valve spring lower retainer
10 Valve stem
11 Cotter pin
12 Valve disc
13 Valve guide sleeve
14 Valve seat
15 Valve body

Figure 8-4. Relief valve, hydraulic pump, explod view.

(9) Remove valve stem (10) with valve disc (12) attached, from valve body (15). Pull cotter pin (11) and remove valve disc (12).

(10) Remove valve guide sleeve (13) from valve seat (14).

(11) Unscrew and remove valve seat (14) from valve body (15).

Note. Remove valve seat only if it requires replacement.

c. Cleaning, Inspection, and Repair.

(1) Clean all parts with potable water.

(2) Inspect all parts for excessive wear, cracks, nicks, burs, scoring, and deformation. Inspect for thread damage.

(3) Dress up minor nicks, burs, and thread damage with small file.

(4) If necessary, lap both valve seat and disc.

(5) Replace all defective parts.

d. Reassembly, Installation, and Adjustment.

(1) *Reassembly.*

(*a*) Install and tighten valve seat (14) in valve body (15).

(*b*) Position valve guide sleeve (13) on valve seat (14).

(*c*) Position valve disc (12) on valve stem (10), and secure by installing cotter pin (11).

(*d*) Place valve disc (12) with valve stem (10) on valve seat (14).

(*e*) Slide lower spring retainer (9), valve spring (8), and upper spring retainer (7) into position on valve stem (10).

(*f*) Place valve bonnet gasket (6) in position on valve body (15). Install valve bonnet (5) in valve body.

(*g*) With locknut (4) all the way up on adjusting screw (3), install in valve bonnet (5) until it touches upper spring retainer (7).

(*h*) Install gasket (2) on valve bonnet (5), and place valve cap (1) on valve bonnet (5).

(2) *Installation.*

(*a*) Install nipples (49 and 51, fig. 7-1) in relief valve ports. Install elbow union (48) on nipple (49).

(*b*) Install union (52) on nipple (51) at inlet port of relief valve (50).

(*c*) Secure relief valve in position on pump (6) with unions (48 and 52).

(*d*) Open gate valves (40, 63, and 108).

(*e*) Check liquid level sight gage (17, fig. 3-24), and refill reservoir if necessary.

(3) *Adjustment.*

(*a*) Check for proper operation of pressure gage.

(*b*) Lower the elevator to the pedestals.

(*c*) Close all manual valves in the power unit except suction gate valve (40 and 63) of pump whose relief valve is being adjusted.

(*d*) Close 3-inch manual valve in line to main cylinder.

(*e*) Disconnect motor of pump whose relief valve is not under test, by manually tripping overload relay.

(*f*) Remove relief valve cap (1, fig. 8-4).

(*g*) Momentarily press the ELEVATOR UP button.

(*h*) When motor shifts to RUN, read pressure on gage (105, fig. 7-1).

Caution: **Do not allow pump to run over 10 seconds during test. Stop pump and motor as soon as pressure reading is obtainable.**

(4) *Testing.* Loosen locknut (4, fig. 8-4) and turn pressure adjusting screw (3). Tighten locknut, and test. Alternately adjust and test until gage reads 370 psi for power units NE-5007 and NE-50000. The correct gage reading for all other power units is 500 psi.

Note. Turn the pressure screw clockwise to increase pressure and counterclockwise to decrease pressure.

Caution: **If clockwise adjustment does not increase pump pressure, the pump is faulty and must be replaced.**

8-5. Atkomatic Two-Way Solenoid Valve Assemblies

Atkomatic valve assemblies are used in conjunction with power unit NF-5007 only. All other power units are equipped with ASCO valve assemblies. Paragraphs 8-6 through 8-9 of this chapter cover Atkomatic valve assemblies.

Note. The following procedures are for complete overhaul and disassembly. Any part or parts of these procedures may be performed under field conditions. Under normal circumstances, the solenoid operated valves are repaired without removal from the power unit. These repairs entail only partial disassembly. Follow applicable steps. Among these repairs are replacement of O-rings, bonnet gaskets, valve discs, pilot assembly components, piston rings or piston, and any movable or attaching parts.

Caution: **Be sure elevator platform is resting on the pedestals or the locking bars, and that all hand operated valves in the power unit are closed.**

8-6. Atkomatic Lowering Valve S4

a. General. Lowering valve S4 (73, fig. 7-4) in one of the two normally closed two-way solenoid valves that control the flow of hydraulic fluid to lower the elevator.

b. Removal and Disassembly.

(1) With the elevator platform resting on the pedestals and power off, close the normally open gate valves (33 and 49, fig. 7-4) on the suction side of pumps number 1 and 2 (6, 12). Close the normally open gate valves (70, 30, 18).

(2) Use a clean container to catch the hydraulic fluid.

(3) Remove wiring from valve (73).

(4) Remove attaching parts at flanges (71, 74). Remove S4 valve (73).

(5) Remove handwheel nut (1, fig. 8-5) and handwheel (2) from throttling valve stem and disc assembly (9).

(6) Remove packing nut (3) and packing (4).

(7) Remove throttling valve bonnet (5) from valve body (20).

(8) Remove nuts (18) and washers (17) from bolts (16) holding cylinder cap (15) to valve body (20).

(9) Remove bolts (16) and washers (17) from cylinder cap (15), and lift cylinder cap and O-ring (8) from valve body (20).

(10) Remove pilot valve assembly (14) from cylinder cap (15), and pull piston spring (13) from piston (10).

(11) Remove piston (10) and stem and disc assembly (9) from valve body (20).

(12) Remove pilot valve seat screw (4, fig 8-6) and piston stop screw (6) from top of piston (3).

(13) Remove disc screw (1) and disc (2) from bottom of piston (3).

(14) Expand the ends of piston rings (5) and remove rings from piston.

(15) Remove adjusting screw cap (1, fig 8-7), adjusting screw packing nut (2), packing retainer (3), packing (4), and adjusting screw (5) from valve body (20, fig. 8-5).

(16) Remove flange (6) from nipple (21) and remove nipple from valve body (20).

(17) Repeat (16) above to remove other flange assembly.

(18) Remove and disassemble solenoid by removing screw (1, fig. 8-8) and washer (2), lift off nameplate (3) coil assembly cap (4), spring (5), upper flux plate (6), solenoid coil (7) coil tube (8), and lower flux plate (9).

Caution: **When disassembling the valve, make certain to place all parts on a clean, lint-free surface, and keep covered. All parts are machined to close tolerances and minute particles of foreign matter will prevent proper operation of the valve.**

c. Cleaning, Inspection and Repair.

(1) Clean all parts with a dry lint-free cloth.

(2) Inspect the valve body and cylinder cap for cracks, burs, and worn or damaged threads. Inspect the piston and rings for wear, scoring, and cracks.

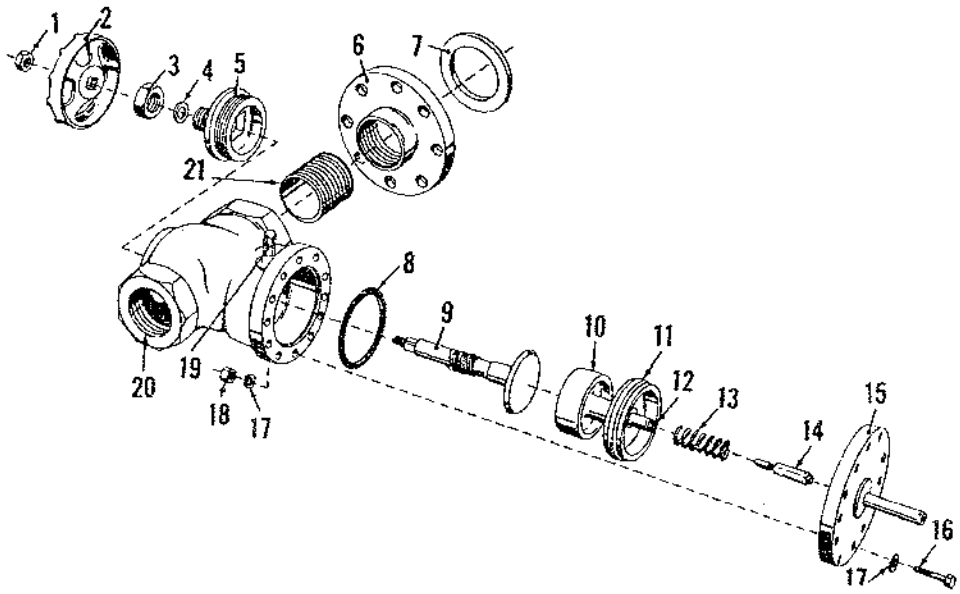

EMC 5-1450-201-35/38

1 Handwheel nut
2 Handwheel
3 Packing nut
4 Packing
5 Bonnet
6 Flange pipe
7 Gasket
8 O-ring
9 Stem and disc assembly
10 Piston
11 Piston rings
12 Pilot valve seat screws
13 Piston spring
14 Pilot valve assembly
15 Cylinder cap
16 Bolt
17 Flat washer
18 Hex nut
19 Adjusting screw assembly
20 Valve body
21 Pipe nipple

Figure 8-5. S4 valve, atkomatic, exploded view.

(3) Replace defective or excessively worn parts as necessary.

d. Reassembly and Installation.

Note. If the pilot valve seat screw (4, fig. 8-6) is made of brass, replace with a stainless steel screw to increase valve efficiency and life.

(1) Install nipple (21, fig. 8-5) in valve body (20). Screw flange (6) on nipple until flange is tight. Install the second nipple and flange in the valve body in the same manner.

Caution: **When installing flanges, be careful not to damage the brass valve body by improper handling. Hold the valve by the flats provided at the pipe thread.**

(2) Position the throttling valve stem and disc assembly (9) in valve body (20).

(3) Install valve bonnet (5) in valve body.

(4) Replace packing (4), and install packing retainer (3) on valve bonnet (5).

(5) Place handwheel (2) on valve stem and disc assembly (9). Secure with handwheel nut (1).

(6) Install adjusting screw (5, fig. 8-7) in valve body.

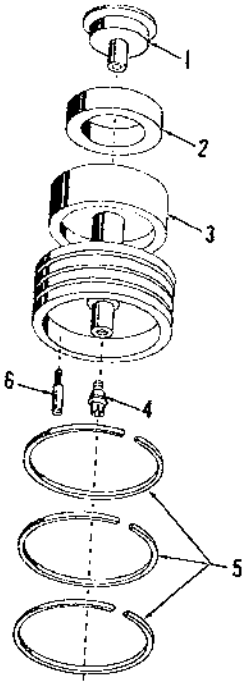

EMC 5-1450-201-35/39

1 Disc screw
2 Disc
3 Piston
4 Pilot valve seat screw
5 Piston ring
6 Piston stop screw

Figure 8-6. Atkomatic valve piston assembly, exploded view.

(7) Install packing retainer (3) and packing (4) on adjusting screw (5). Secure by installing packing nut (2). Replace adjusting screw cap (1).

(8) Place piston rings (5, fig. 8-6) on piston (3).

(9) Thread pilot valve seat screw (4) and piston stop screw (6) into place on piston (3), and tighten securely.

(10) Position disc (2) on bottom of piston (3), and install disc screw (1).

(11) Position O-ring (8, fig. 8) in valve body (20).

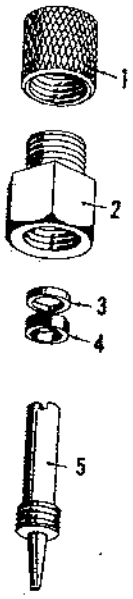

EMC 5-1450-201-35/40

1 Adjusting screw cap
2 Adjusting screw packing nut
3 Packing retainer
4 Valve piston packing
5 Adjusting screw

Figure 8-7. Adjusting screw assembly, Atkomatic valves, exploded view.

(12) Place the assembled piston (1) in the valve body (20).

(13) Place piston spring (3) on top of piston (10).

(14) Hold pilot valve assembly (14) on pilot valve seat screw (12). Place cylinder cap (15) over end of pilot valve assembly (14).

(15) Aline hose in cylinder cap (15) with those in valve body (20), and install washers (17), nuts (18) and bolts (16).

(16) Reassemble solenoid assembly on valve by positioning lower flux plate (4, fig. 8-8) over pilot tube assembly of cylinder cap (15, fig. 8-5). Replace coil tube (8), solenoid coil (7), upper flux plate (6), coil holddown spring (5), and coil assembly cap

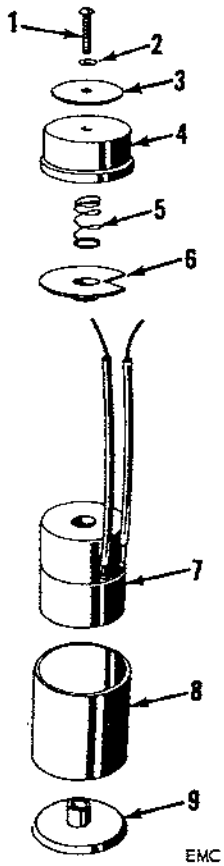

EMC S-1450-201-35/41

1	Screw	6	Upper flux plate
2	Flat washer	7	Solenoid coil
3	Nameplate	8	Coil tube
4	Coil assembly cap	9	Lower flux plate
5	Coil holddown spring		

Figure 8-8. Typical valve solenoid, Atkomatic, exploded view.

(4). Position nameplate (3) and secure with washer (2) and screw (1).

(17) Position valve (73, fig. 7-4) between flanges of discharge manifold assembly (16) and pipe flange (2).

(18) Replace flange gaskets (7, fig. 8-5).

(19) Install attaching parts in each of the flanges on both ends of valve, and tighten.

(20) Open gate valves (18, 30, 33, 49, and 70, fig. 7-4).

(21) Bleed the hydraulic system and adjust the valve.

8-7. Atkomatic Shutoff Valve S6

a. General. Shutoff valve S6 (38, fig. 7-4) is a normally closed valve installed in the hydraulic system. It prevents any hydraulic flow from reaching the elevator when pump number 1 is used to close elevator doors.

b. *Removal and Disassembly.*

(1) Close gate valves (18, 30, 33, 49, 70, fig. 7-4).

(2) Use a clean container to catch the hydraulic fluid.

(3) Remove wiring from valve (38).

(4) Remove attaching parts between S6 valve (38) and manifold assembly (8).

(5) Remove attaching parts at flange (80 and 35) and at flange between SB valve (13) and S5 valve (9).

(6) Remove entire pipe assembly with S6 and S5 valves attached.

(7) Remove flange and connecting nipple (37) from S6 valve (38).

(8) Turn valve (38) counterclockwise to remove it from the pipe assembly (7).

(9) Disassemble in accordance with paragraph 8-6*b* omitting (1), (2), and (3).

Note. This valve normally is closed. It is similar to lowering valve S4 except that it has no throttling device at the base of the valve.

c. Cleaning, Inspection, and Repair. Clean, inspect, and repair as instructed in paragraph 8-6*c*.

d. Reassembly and Installation.

(1) Reassemble in accordance with paragraph 8-6*d*, omitting (2), (3), (4), and (5).

(2) Install S6 valve (38) on pipe assembly (7).

(3) Install flange and connecting nipple (37) on S6 valve (38).

(4) Position entire pipe assembly with S5 and S6 valves attached and fasten with attaching parts at flanges 80 and 35 and at flange between SB valve (13) and S5 valve (9).

(5) Install attaching parts at flange between S6 valve and manifold assembly (8).

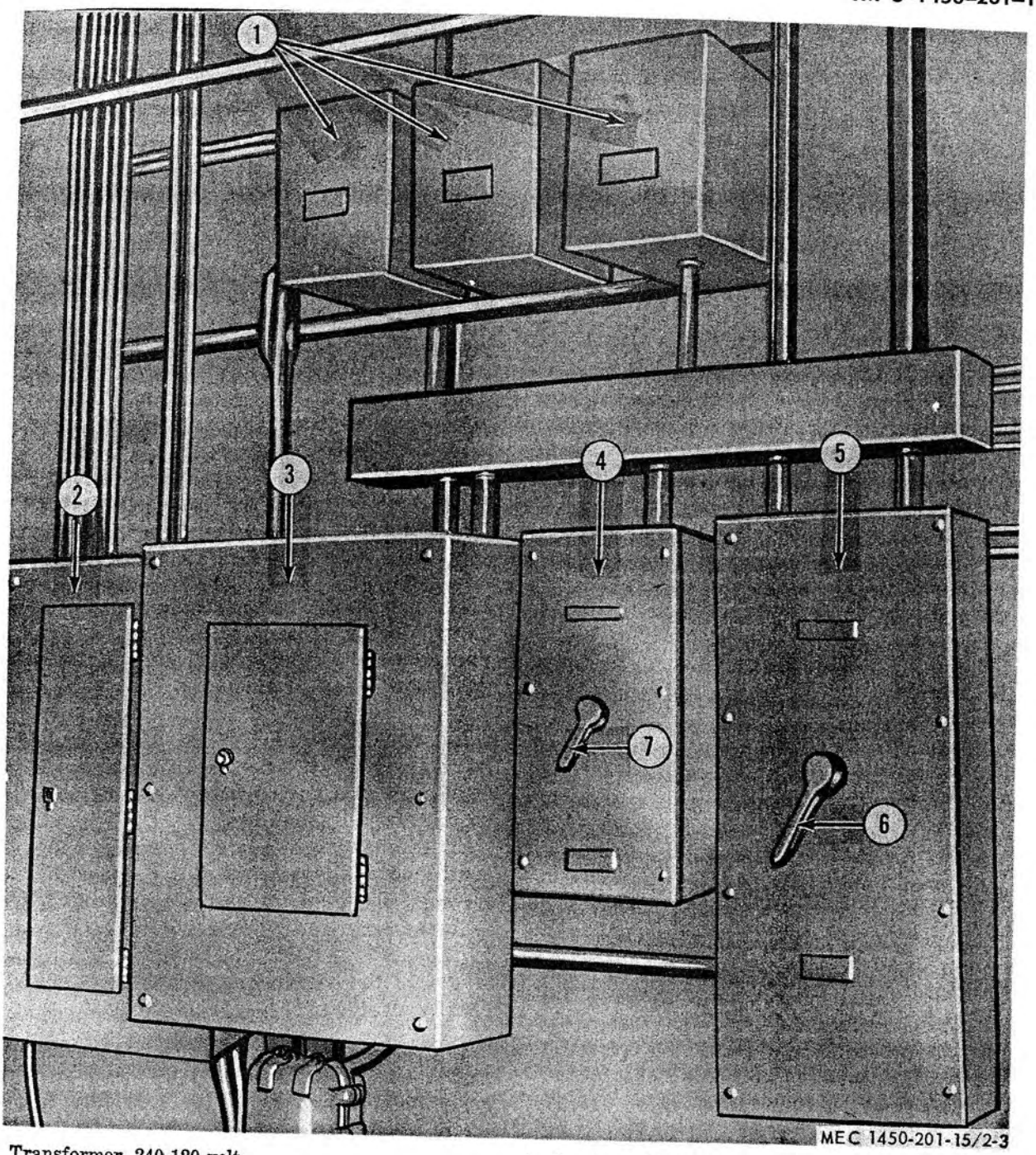

1 Transformer, 240-120 volt
2 Circuit breaker panel, service lighting and equipment.
3 Circuit breaker panel, service lighting and equipment
4 Service light master switch panel
5 Main power switch
6 Main power switch lever
7 Service light master switch lever

Figure 2-3. Service entrance panels.

(6) Attach wiring to solenoid (38).
(7) Open gate valves (18, 30, 33, 49, and 70).

8-8. Atkomatic Solenoid Valves SA1 and SA2

a. General. Solenoid valves SA1 (26, fig. 7-4) and SA2 (77) are normally open 2-way valves. Bypass valve SA2 is installed in the hydraulic system to avoid any heavy hydraulic, mechanical, and electrical loads on the equipment. Safety valve SA1 prevents the platform from moving during a door sequence should elevator shutoff valve S6 leak or stick open.

Note. Solenoid valve SA1 and SA2 are similar to the elevator shutoff valve S6 differing only in pilot components. Disassembly and reassembly are identical to lowering valve S4 with the exception of the internal pilot valve assembly, pilot valve spring, and throttling device.

b. Removal and Disassembly.
(1) Close gate valve (18, 30, 33, 49, 70, fig. 7-4).
(2) Remove wiring from valve (26).
(3) Remove attaching parts at flange assembly (32) and manifold assembly (8).
(4) Remove valve (26) and gaskets (25).

c. SA2 Removal.
(1) Close gate valves (18, 30, 33, 49, 70).
(2) Remove wiring from SA2 valve (77).
(3) Remove attaching parts at flange (55), and at flange between SA2 valve and pipe and flange assembly (11).
(4) Remove SA2 valve and gaskets (59).
(5) Remove nuts (16, fig. 8-9) and washers (11) from bolts (10), securing cylinder cap (9) to valve body (15).
(6) Remove bolts (10), and pull cylinder cap (9) and O-ring (4) from valve body (15).
(7) Remove pilot valve assembly (8), piston spring (7), and pilot valve spring (12).
(8) Lift piston (5) out of valve body (15).
(9) Remove and disassemble piston in accordance with paragraph 8-6b.

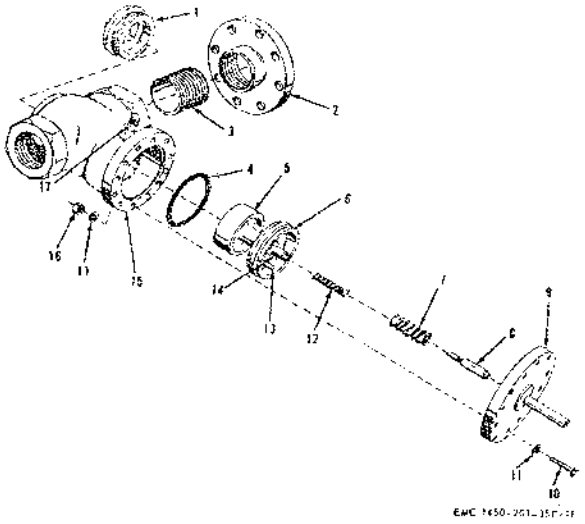

1 Bottom plug
2 Pipe flange
3 Nipple
4 O-ring
5 Piston
6 Piston ring
7 Piston spring
8 Pilot valve assembly
9 Cylinder cap
10 Bolt
11 Flat washer
12 Pilot valve spring
13 Piston stop screw
14 Pilot valve seat screw
15 Valve body
16 Hex nut
17 Adjusting screw assembly

Figure 8-9. SA1 and SA2 solenoid valve, Atkomatic, exploded view.

(10) Remove and disassemble adjusting screw assembly in accordance with paragraph 8-6b.
(11) Remove each flange (2, fig. 8-9) from nipple (3), and remove from valve body (15).
(12) Remove and disassemble solenoid assembly in accordance with paragraph 8-6b.

d. Cleaning, Inspection, and Repair. Perform in accordance with paragraph 8-6c.

e. Reassembly and Installation.

(1) Install nipples (3, fig. 8-9) in valve body (15), and screw flanges (2) on nipples.

(2) Reassemble piston assembly in accordance with paragraph 8-6d.

(3) Insert assembled piston (5, fig. 8-9) in valve body (15).

(4) Place piston spring (7) on top of piston (5). Position pilot valve spring (12) inside of piston spring, and around pilot valve seat screw (14).

(5) Install O-ring (4) in valve body (15).

(6) Insert pilot valve assembly (8) in pilot valve spring (12). Compress pilot valve spring until pilot valve assembly seats in pilot valve seat screw (14).

(7) Position cylinder cap (9) on valve body (15), and secure with washers (11), nuts (16), and bolts (10).

(8) Install adjusting screw assembly in accordance with paragraph 8-6*d*.

(9) Assemble and install solenoid coil in accordance with paragraph 8-6d.

(10) Position SA1 valve (26, fig. 7-4) and gaskets (25) between flange assembly (32) and manifold assembly (8).

(11) Install and tighten attaching parts at flange assembly (32) and manifold assembly (8).

(12) Attach wiring to SA 1 valve (26).

(13) Open gate valves (18, 30, 33, 49, and 70).

8-9. Atkomatic Leveling Valve S3

a. Leveling valve S3 (76, fig. 7-4) is a normally closed 2-way solenoid valve installed in the hydraulic system. It works in conjunction with lowering valve S4 to provide a slow rate of descent. It also permits the elevator to stop smoothly without shock to the hydraulic system.

b. Removal and Disassembly.

(1) Remove in accordance with instructions in paragraph 8-6*b*.

(2) Disassemble in accordance with instructions in paragraph 8-6b.

Note. Leveling valve S3 is identical to lowering valve S4 except that it is smaller and has a threaded bonnet, and two piston rings instead of three. Follow procedures for S4 valve with this in mind.

c. Cleaning, Inspection, and Repair. Clean, inspect, and repair in accordance with instructions in paragraph 8-6*c*.

d. Reassembly and Installation. Reassemble and install in accordance with instructions in paragraph 8-6*d*.

8-10. Atkomatic Doors Bypass Valve SB

a. General. Bypass valve SB (13, fig. 7-4) is a normally open two-way solenoid valve installed in the hydraulic system. It prevents heavy mechanical, hydraulic, and electrical loads on the equipment during initial starting. Its primary function is to help close the elevator doors.

b. Removal and Disassembly.

(1) Close gate valve (18, 30, 33, 49, 70, fig. 7-4).

(2) Use a clean container to catch the hydraulic fluid.

(3) Disconnect wiring from valve (13).

(4) Remove attaching parts at flange between S5 valve (9) and SB valve (13), and at flange (20).

(5) Remove valve gaskets (21).

Caution: **When disassembling solenoid valves, make certain to place all parts on a clean surface as small particles of foreign matter will prevent proper operation of the valves.**

(6) Remove and disassemble solenoid assembly in accordance with paragraph 8-6*b*.

(7) Remove cylinder cap (1, fig. 8-10) from valve body.

(8) Remove needle valve assembly (2), needle valve spring (4), and piston spring (3).

(9) Lift piston assembly (5) from valve body (6), and remove disc screw (1, fig. 8-6) and disc (2) from bottom of piston (3).

(10) Remove pilot valve seat screw (4) and piston stop screw (6).

(11) Remove piston rings (5) from piston (3).

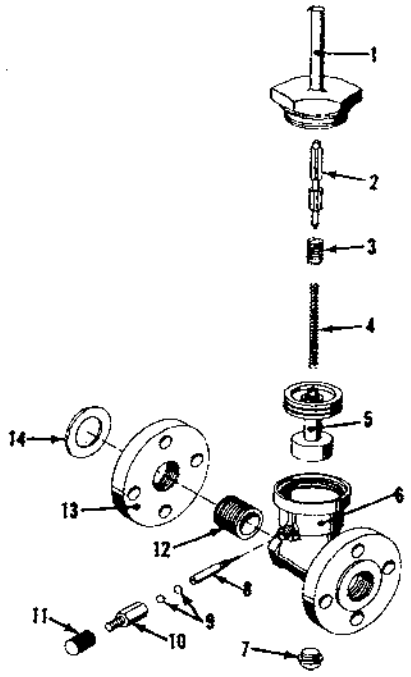

1 Cylinder cap
2 Needle valve assembly
3 Piston spring
4 Needle valve spring
5 Piston assembly
6 Valve body
7 Bottom plug
8 Adjusting screw
9 Adjusting screw packing
10 Packing nut
11 Adjusting screw cap
12 Nipple
13 Flange
14 Flange gasket

Figure 8-10. SB bypass valve, Atkomatic, exploded view.

(12) Unscrew adjusting screw cap (11, fig. 8-10) from valve body (6). Remove packing nut (10), adjusting screw packing (9), and adjusting screw (8) from valve body.

(13) Remove flange (13) from pipe nipple (12) on each side of valve, and remove nipples from valve body.

c. Cleaning, Inspection, and Repair. Perform in accordance with paragraph 8-6c.

d. Reassembly and Installation.

(1) Install nipples (12, fig. 8-10) valve body.

(2) Screw flanges (13) on nipples (12

(3) Insert adjusting screw (8) into val body.

(4) Position adjusting screw packing (9 around adjusting screw (8) and s cure with packing nut (10).

(5) Install adjusting screw cap (11) packing nut (10).

(6) Install piston rings (5, fig. 8-6) piston (3).

(7) Thread pilot valve seat screw (4) ar piston stop screw (6) into place piston (3). Tighten securely.

(8) Position disc (2) on bottom of pist (3), and secure with disc screw (1

(9) Place piston (5, fig. 8-10) in val body (6).

(10) Place piston spring (3) on top piston (5). Position needle val spring (4) inside piston spring, an around the valve seat screw (4, fi 8-6).

(11) Insert needle valve assembly (2, fi 8-10) in needle valve spring (4 Compress needle valve spring unt valve assembly seats in valve se screw. Install cylinder cap (1).

(12) Reassemble and install the soleno assembly in accordance with par graph 8-6*d*.

(13) Position valve assembly (13, fig. 7-4 with gaskets (25) between S5 val (9) and flange (20).

(14) Install and tighten attaching part

(15) Attach wiring to SB valve (13).

(16) Open gate valves (18, 30, 33, 4 70).

8-11. Atkomatic Door Shutoff Valve S5

a. General. Door shutoff valve S5 (9, fi 7-4) is a normally open 2-way solenoid val located on the discharge side of pump No. 1 When this valve closes, the pump flow i diverted to the elevator system, preventin pressure from reaching the elevator door sys tem.

b. Removal and Disassmelby.

(1) Turn off gate valves (18, 30, 33 49, and 70) in the power unit. Us

clean containers to catch the hydraulic fluid.

(2) Disconnect wiring from S5 valve (9).

(3) Remove bolts and gaskets from the discharge reducing flange (35) of pump number 1 (6).

(4) Remove bolts and gasket at the flange between the valve S6 (38) and discharge manifold (16).

(5) Remove bolts and gasket at the flange (80) directly below the door four-way valve (78).

(6) Remove the bolts and gasket at the flange between the valve S5 (9) and valve SB (13).

(7) Remove flange gaskets and piping assembly with valve S5 and valve S6 from the power unit.

(8) Remove pipe and flange assembly (10) from the valve S5 (9). Unscrew valve from the remaining pipe assembly (7). Do not disturb valve S6.

(9) Disassemble in accordance with paragraph 8-10b.

c. Cleaning, Inspection, and Repair. Clean, inspect and repair in accordance with paragraph 8-6c.

d. Reassembly and Installation. Reassemble in accordance with paragraph 8-10.

(1) Screw valve S5 (9, fig. 7-4) into pipe assembly (7). Attach the remaining pipe and flange assembly (10). Be certain that valve remains in vertical position.

(2) Place piping assembly with valves S5 and S6 into the power unit.

(3) Replace bolts in the bottom of the flange between valve S5 (9) and valve SB (13).

(4) Install gasket (21) between pipe flanges.

Caution: **Install bolts at all flanges, and aline piping to avoid force fitting. Tighten parts after this precaution has been taken.**

(5) Replace bolts and gasket at flange (80) directly below the door four-way valve (78).

(6) Replace bolts and gasket at flange between valve S6 (38) and discharge manifold (16).

(7) Replace bolts and gasket at discharge reducing flange (35) of pump number 1 (6).

(8) Connect wiring at S5 valve (9).

(9) Open all gate valves (18, 30, 33, 49, 70).

(10) Adjust S5 valve (par. 3-104).

8-12. ASCO Two-Way Solenoid Valve Assemblies

ASCO valves are used in conjunction with all power units other than NE-5007. Paragraphs 8-13 through 8-20 of this chapter cover ASCO valve assemblies and subassemblies.

Note. The following procedures are for complete overhaul and disassembly. Any part or parts of these procedures may be performed under field conditions. Under normal circumstances, the solenoid operated valves are repaired without removal from the power unit. These repairs entail only partial disassembly. Follow applicable steps. Among these repairs are replacement of O-rings, bonnet gaskets, valve discs, pilot assembly components, piston rings or piston, and any movable or attaching parts.

Caution: **Be sure elevator platform is resting on pedestals or locking bars, and that all hand operated valves in the power unit are closed.**

8-13. ASCO Lowering Valve S4

a. General. Lowering valve S4 (22, fig. 7-1) is one of two normally closed, two-way solenoid valves that control the flow of hydraulic fluid to lower the elevator.

b. Removal and Disassembly.

(1) Disconnect electrical wiring at the solenoid.

(2) Remove attaching parts (56) and lift off U-bolt (76). Remove S4 valve with flanges and nipples attached.

(3) Remove attaching parts at each of the two flanges.

(4) Remove nipples and flanges from valve ports.

(5) Remove pivot valve capscrew (33, fig. 8-11) and lockwasher (32) from the solenoid assembly.

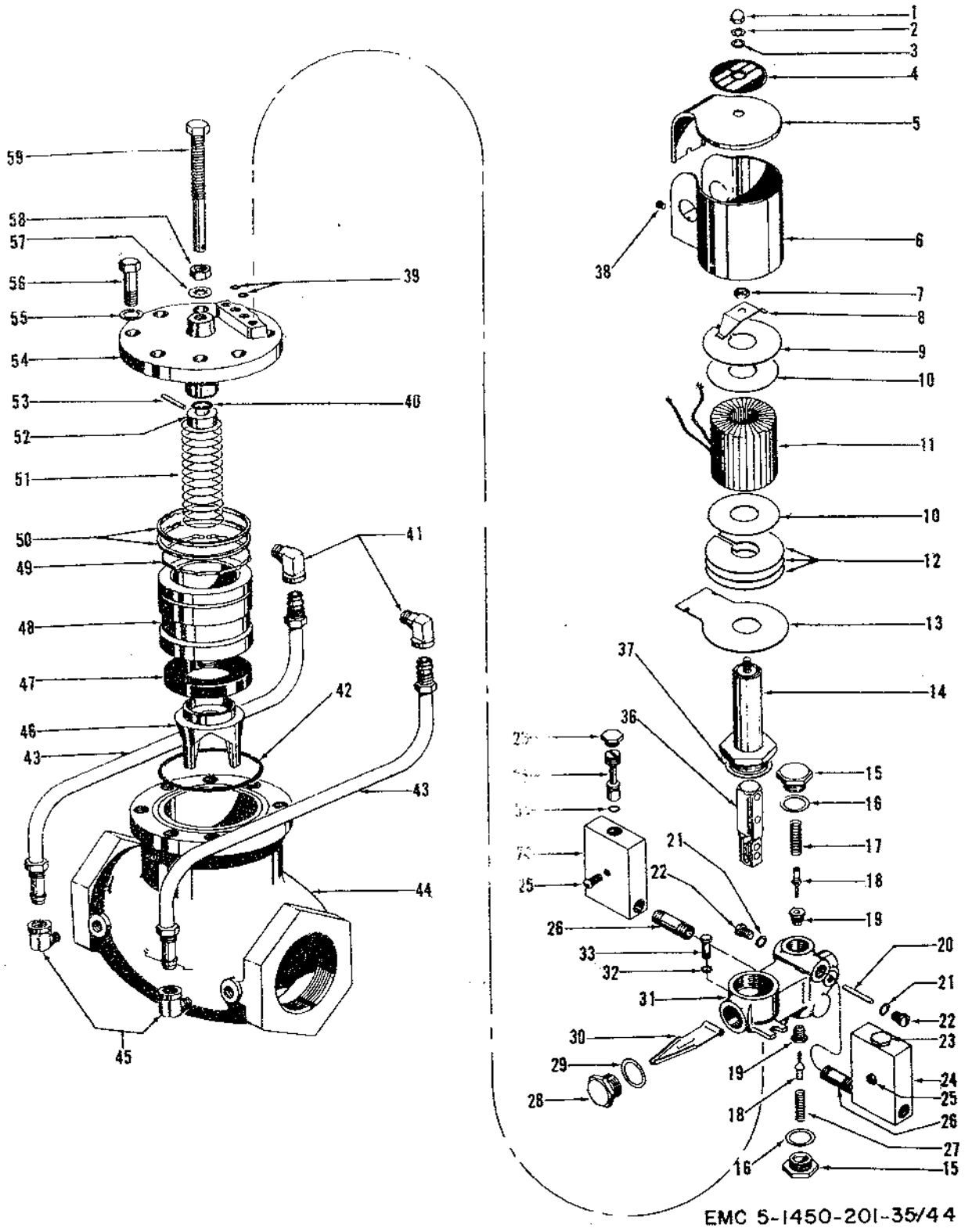

Figure 8-11. S4 valve, ASCO, exploded view.

1 Cover nut
2 Lockwasher
3 Grommet
4 Nameplate
5 Cover
6 Housing
7 Nut
8 Spring washer
9 Upper flux plate
10 Insulating washer
11 Coil
12 Lower flux plate
13 Housing base
14 Core
15 Disc guide cap
16 Guide cap gasket
17 Upper pilot valve spring
18 Pilot valve disc
19 Pilot seat
20 Lever pin
21 Washer
22 Pin bearing screw
23 Metering valve cap
23 Metering valve body
25 Stop screw
26 Nipple
27 Lower pilot valve spring
28 End cap
29 End cap gasket
30 Pilot valve lever
31 Pilot valve body
32 Lockwasher
33 Pilot valve capscrew
34 O-ring
35 Metering valve stem
36 Plunger
37 Washer
38 Cover screw
39 Pilot gasket
40 O-ring
41 Elbow
41 O-ring
43 Tubing
44 Valve body
45 Strainer assembly
46 Disc nut
47 Valve disc
48 Piston
49 Ring
50 Piston ring
51 Valve spring
52 Piston stop cap
53 Roll pin
54 Cap
55 Lockwasher
56 Cap flange screw
57 Lockwasher
58 Piston stop locknut
59 Piston stop

Figure 8-11—Continued.

(6) Disconnect tubing (43) from strainer assembly (45) on valve body (44), and remove solenoid unit.

(7) For disassembly of S4 valve solenoid, see paragraph 8-18 *a*.

(8) Replace capscrew (33) and lockwasher (32) in valve cap (54). Remove pilot gaskets (39) from valve caps.

(9) Remove capscrews (56) and lockwashers (55), and lift off cap (54) with piston stop (59).

Note. On some ASCO type valves, bonnet studs and bonnet nuts are utilized inst of capscrews and washers.

(10) Remove roll pin (53), and lift off piston stop cap (52) and O-ring (40).

(11) Remove piston stop (59) from cap.

(12) Remove lockwasher (57) and piston stop locknuts (58).

(13) Lift valve spring (51) out of valve body (44).

(14) Lift out piston assembly (48) and disc nut (46).

(15) Remove disc nut (46) from piston (48). Valve disc (47) will fall away.

(16) Pull off snap ring (49) and piston rings (50).

(17) Remove O-ring (42) from top of valve body (44).

Note. On NE-50000, and NE-50009 power units, a gasket is used between the cap and body instead of the O-ring.

c. Cleaning, Inspection, and Repair.

(1) Clean all valve parts with an approved solvent and dry thoroughly.

(2) Inspect valve body (44) and all metal parts for cracks, scoring, burs, and worn or damaged threads. Check piston (48) and piston rings (50) for wear, scratches, or scoring. Check valve spring (51) for deformation.

(3) Replace parts of the valve assembly having scratches, scoring, deformation, or signs of excessive wear.

d. Reassembly and Installation.

(1) Install strainer assembly (45) into base of valve body (44).

(2) Replace O-ring (42) in groove at top of valve body.

Note. On NE-50000 and NE-50009 power units, a gasket is used between the cap and body instead of the O-ring.

(3) Place piston rings (50) on piston (48), and secure with snapring (49).

(4) Place valve disc (47) on top of disc nut (46), and screw piston (48) into disc nut (46).

(5) Install piston assembly (48) in valve body (44).

(6) Place valve spring (51) in center of piston.
(7) Screen valve stop locknut (58) on piston stop (59). Slip on lockwasher (57), and bring up under locknut.
(8) Screw this piston stop assembly (59) into valve cap (54).
(9) Slip O-ring (40) over base end of piston stop.
(10) Place piston stop cap (52) on base of piston stop (59), and aline holes in cap and piston stop. Install roll pin (53) into hole.
(11) Place valve cap (54) on valve body (44) and aline mounting holes. Secure with screws (56) and lockwashers (55).
(12) Connect tubing (43) to strainer assembly (45).
(13) Replace gaskets (39) in valve cap (54).
(14) For reassembly of the S4 solenoid, see paragraph 8-18 *c*
(15) Replace solenoid assembly, and secure with screws (33) and lockwashers (32).
(16) Adjust piston top in accordance with par. 3-108.
(17) Replace nipples and flanges at valve ports.
(18) Position valve in place with gaskets (5, fig. 7-1), and secure with attaching parts.
(19) Position U-bolts (76), and secure it with attaching parts (56).

Note. Be sure the flow indicating arrow on the side of the valve body points toward the front of the power unit.

8-14. ASCO Shutoff Valve S6

a. General. Shutoff valve S6 (8, fig. 7-1) is a normally closed valve, installed in the hydraulic system. It prevents any hydraulic flow from reaching the elevator system when pump number 1 is used to close elevator doors.

b. Removal and Disassembly.

(1) Close valves (40, 63, and 108).
(2) Disconnect wiring from solenoid (8, fig. 7-1).
(3) Remove attaching parts at flange (26), and remove gasket (9).
(4) Disconnect union (13), and remove pipe flange assembly (10) with check valve (11) and nipple (12).
(5) Remove S6 valve by unscrewing it from pipe assembly (7). Remove flange (26) and nipple (29).
(6) Remove pilot capscrews (29, fig. 8-12) and washers (28) from solenoid assembly.
(7) Disconnect pilot lines (38) from fitting and strainer assembly (39) and connectors (36) at valve body (40) and pilot valve body (20). Remove solenoid assembly.
(8) For disassembly of S6 valve solenoid, refer to paragraph 8-19*a*.
(9) Replace capscrews (29) and washers (28) in cap (46).
(10) Remove pilot gaskets (34) from solenoid mounting on valve cap (46).

Note. S6 valves used in NE-50000 power units use a gasket (34). NE-50004, 50008, 50009, 50010, and 50012 use O-rings at this point.

(11) Remove body capscrew (48), and washers (47), and lift off valve cap (46).

Note. On some ASCO type valves, cap studs and nuts are utilized instead of capscrews and washers.

(12) Pull out valve spring (45).
(13) Pull piston assembly (43) and disc nut (41) out of valve body.
(14) Remove disc nut (41) from piston assembly (43) and valve disc (42) will fall away.
(15) Pull piston ring (44) from piston.
(16) Pull O-ring (35) from groove in top of valve body.

Note. On NE-50000 and NE-50009 power units, a gasket is used instead of an O-ring between the cap and the body.

(17) Remove adapter (36) and fitting and strainer assembly (39) from valve body.

c. Cleaning, Inspection, and Repair. Clean, inspect, and repair in accordance with instructions given in paragraph 8-13*b*.

d. Reassembly and Installation.

(1) Screw strainer assembly (39) and adapter (36) into valve body (40).

(2) Replace O-ring (35) into groove on head end of valve body.

Note. On NE-50000, 50004, 50008, and 50009 power units, a gasket is used between the cap and the body instead of the O-ring.

(3) Install piston ring (44) on piston (43).

(4) Place valve disc (42) on valve disc nut (41), and screw piston (43) into disc nut.

(5) Place the piston assembly into valve body (40).

(6) Place valve spring (45) into center of piston.

(7) Place valve cap (46) on valve body (40). Aline mounting holes or studs, and secure with body capscrews (48) and washers (47).

(8) For reassembly of S6 valve solenoid, see paragraph 8-19*c*.

(9) Replace gasket (34) in solenoid mounting on the bonnet.

(10) Place solenoid on valve, and secure with capscrews (29) and lockwashers (28).

(11) Connect pilot lines (38) into fitting and strainer assembly (39) and connector 36 at valve body base.

(12) Adjust valve in accordance with paragraph 3-110.

(13) Replace nipple (29, fig. 7-1) in valve (8), and screw flange (26) to nipple.

(14) Screw valve to pipe assembly (7).

(15) Install gasket (9) and pipe flange assembly (10) with check valve (11) and nipple (12). Connect union (13).

(16) Install attaching parts at flange (26).

(17) Connect electrical wiring to S6 valve (8).

(18) Open valves (40, 63, 108).

8-15. ASCO Bypass Valves SA1 and SA2

a. General. Bypass valve SA1 (15, fig. 7-1) and SA2 (20) are normally open, solenoid two-way valves installed in the hydraulic system. They reduce heavy mechanical, hydraulic, and electrical loads on the equipment.

Note. Valves SA1 and SA2 are identical to the shut-off valve S6. They differ from the exploded view in that there is a metering valve to control the closing speed on the solenoid.

b. Removal and Disassembly.

(1) (SA1 valve, NE-50000, NE-50004, NE-50008, NE-50009 power units).

(*a*) Close valves (40, 63, 108, fig. 7-1).

(*b*) Disconnect wiring to SA1 valve (15).

(*c*) Remove attaching parts at flanges (26).

(*d*) Remove valve (15) and gaskets (9).

(*e*) Remove flanges (26) and nipples (29).

(2) (SA1 valve, NE-50010 power unit).

(*a*) Close valves (62, 89, 104, 36, fig. 7-3).

(*b*) Remove wiring to SA1 valve (82).

(c) Disconnect elbow union (80).

(*d*) Remove attaching parts at flange (20) and lift out valve (82) with gasket at flange (20).

(*e*) Remove elbow union (80), nipple (81), and nipple (83) from valve, with elbow (84) and nipple (85).

(3) (SA2 valves, all power units).

(a) Close valves (40, 63, 108, 120, fig. 7-1).

(*b*) Disconnect wiring from solenoid valve (20).

(c) Remove attaching parts from flanges at each end of the valve (20).

(*d*) Remove the valve with flanges and gaskets.

(*e*) Remove flanges from nipples (71), and remove nipples.

(4) (A11 SA1 and SA2 valves.) Disassemble in accordance with paragraph 8-13*b*.

c. Cleaning, Inspection, and Repair. Clean, inspect and repair in accordance with paragraph 8-13*c*.

d. Reassembly and Installation.

(1) Reassemble and install in accordance with paragraph 8-14*b*.

(2) (SA1 Valves, NE-50000, NE-50004, NE-50008, NE-50009 power units).

(*a*) Install nipples (29, fig. 7-1) and flanges (26) on valve (15).

(*b*) Position valve and gaskets (9) in the power unit.

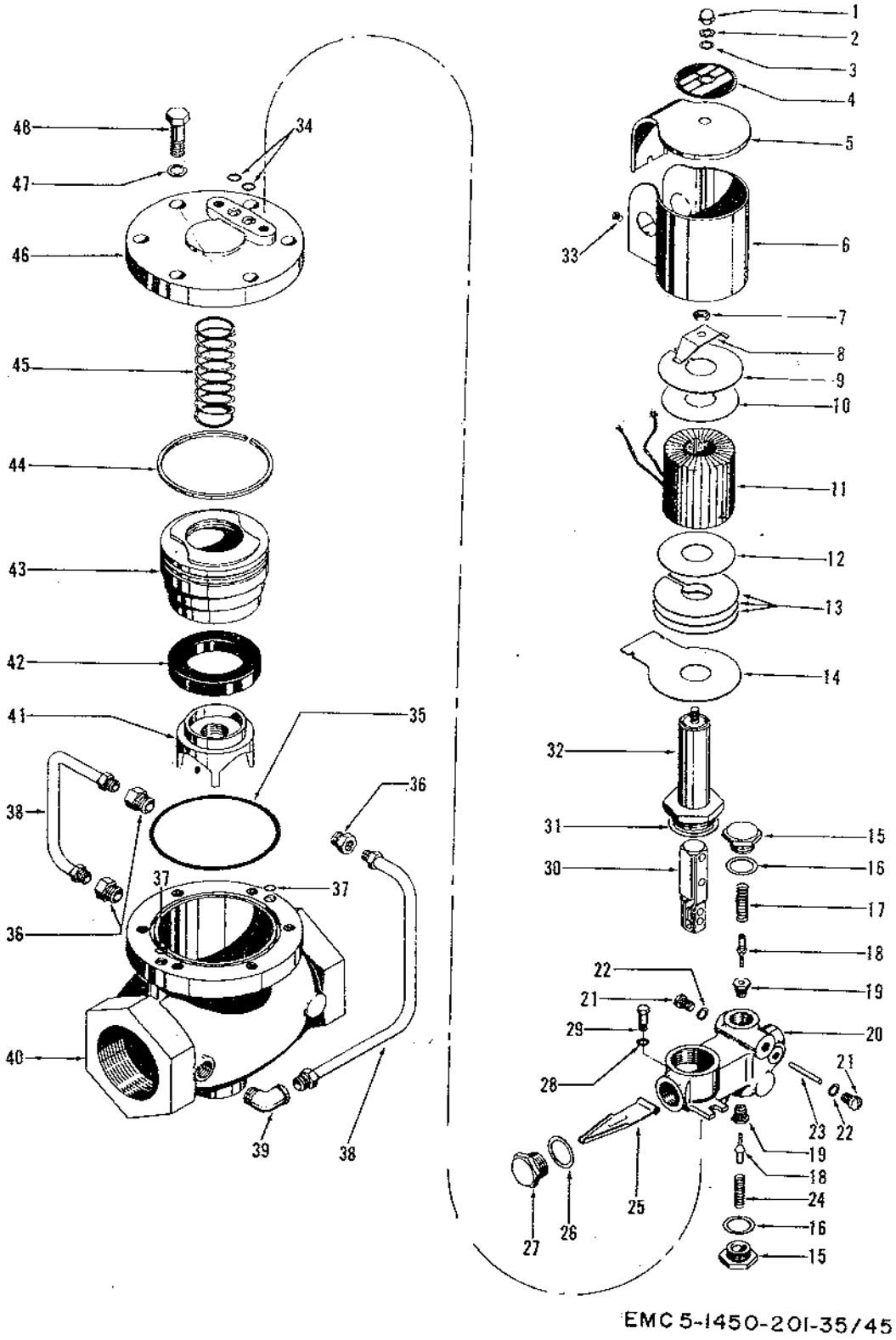

Figure 8-12. S6 valve ASCO, exploded view.

1 Cover nut
2 Lockwasher
3 Bushing
4 Nameplace
5 Cover
6 Housing
7 Locknut
8 Spring washer
9 Upper flux plate
10 Insulating washer
11 Coil
12 Insulating washer
13 Lower flux plate
14 Housing base
15 Retainer
16 Washer
17 Upper pilot valve spring
18 Pilot disc
19 Pilot valve seat
20 Pilot valve body
21 Pin bearing screw
22 Washer
23 Lever pin
24 Lower pilot valve spring
25 Pilot valve lever
26 End cap gasket
27 End cap
28 Lockwasher
29 Pilot valve capscrew
30 Plunger
31 Washer
32 Core
33 Cover screw
34 O-ring
35 O-ring
36 Adapter
37 O-ring
38 Pilot line
39 Fitting and strainer assembly
40 Valve body
41 Disc nut
42 Valve disc
43 Piston
44 Piston ring
45 Valve spring
46 Cap
47 Lockwasher
48 Cap flange screw

Figure 8-13—Continued.

Note. Be sure flow indicating arrow on side of valve body points toward the front of the power unit.

(*c*) Install attaching parts at flanges (26).

(*d*) Connect wiring to valve.

(*e*) Open valves (4, 63, and 108).

(3) SA1 valve, NE-50010 power unit.

(*a*) Install nipple (81, fig. 7-3) and elbow union (80) in valve, and install nipple (83) with elbow (84) and nipple (85).

(*b*) Position valve (15) with attached nipples and elbow in power unit.

(*c*) Install gasket and attaching parts at flange (20).

(*d*) Connect elbow union (80).

(*e*) Open valves (36, 62, 89, 104, 120).

(4) SA2 valves, all power units.

(*a*) Install nipples (71, fig. 7-1) in valve (20), and screw flanges on nipples.

(*b*) Position valve and gasket in the power unit.

(*c*) Replace attaching parts in flanges at each end of valve (20).

(*d*) Connect wiring to valve.

(*e*) Open valves (40, 63, and 108).

8-16. ASCO Leveling Valve S3

a. General. Leveling valve S3 (28, fig. 7-1) is a normally closed two-way solenoid valve installed in the hydraulic system. It works in conjunction with valve S4 during elevator lowering operation. Leveling valve S3 provides a slow rate of descent, and permits the elevator to stop smoothly without shock to the hydraulic system.

b. Removal and Disassembly.

(1) (S3 valve, NE-50000, NE-50004, NE-50008, NE-50009 power units).

(*a*) Close valves (40, 63, 108, fig. 7-1).

(*b*) Disconnect wiring from valve (23).

(*c*) Disconnect unions (78, 99).

(*d*) Remove S3 valve and attached piping from power unit.

(*e*) Remove nipple (77) with attached union from valve (23).

(*f*) Unscrew S3 valve from pipe (79). Leave remaining piping intact.

(2) (S3 valve, NE-50010 power unit).

(*a*) Close valves (36, 62, 89, 104, 120, fig. 7-3).

(*b*) Disconnect wiring from S3 valve (108).

Section II. CONTROLS AND INSTRUMENTS

2-3. General

This section describes, locates, illustrates, and furnishes the operator, crew, or organizational maintenance personnel sufficient information about the various controls and instruments for proper operation of the special purpose elevator.

2-4. Main Power Switch

The main power switch (6, fig. 2-3) is located on the forward catwalk in the magazine area. It controls power distribution to the elevator power unit and electrical control system. No elevator components can be operated when this switch lever is in the OFF position (fully clockwise).

2-5. Control Power Switch

The control power switch (3, fig. 1-2) is located near the electrical controller cabinet. When the lever on this switch is DOWN, all low-voltage power is cut off from the actuating coils in the controllers.

Note. The control power switch is not normally used. It is in the ON position when the installation becomes military property. Disengagement of the main power switch is the preferred method for removing power from the control relay cabinets.

2-6. Master Control Station

The master control station (1, fig. 2-2) is located on the forward wall about 20 feet from the entrance to the console room passage. This station has five momentary contact buttons and a selector switch at the bottom. The selector switch transmits controlling ability selectively to the console, to the elevator control station, or to the master control station itself. From top to bottom, the buttons open the elevator doors, close them, raise the elevator, lower it, and stop all operation.

2-7. Elevator Control Station

Raising and lowering of the elevator can be accomplished at the elevator control station (2, fig. 2-4) located at the left forward corner of the elevator platform. This station is energized by the master control station rotary selector switch (7, fig. 2-2), and is equipped with three momentary contact type controlling buttons (2, 3, and 4, fig. 2-1). The top button raises the elevator; the second lowers it; the third can stop all operation regardless of selector switch position.

2-8. Gages

a. General. Gages are provided for determining hydraulic fluid level, purity of hydraulic fluid, and hydraulic pressure.

b. Fluid Level Gage. This gage (18, fig. 1-2) consists of two horizontal white bars behind a circular transparent glass seal plate, located on the front wall of the reservoir. A small space between the bars indicates optimum liquid level when equipment is in storage position, elevator down, doors closed. Hydraulic fluid should be added if the fluid is below the bottom of the lower bar. Liquid level should not be above the top edge of the upper bar after fluid is added.

c. Sediment Sight Gage. This gage (16) is located on the front wall of the reservoir to the right of the fluid level gage. It indicates the presence of foreign material in the hydraulic fluid. If the fluid is cloudy or if there is residue in the bottom, see paragraph 3-114*d*—filtering procedure.

d. Fluid Pressure Gage. This gage (5) is located on the 3-inch line at the rear of the power unit. Pressure may be checked by opening a small manual valve (6) at the point where the gage tubing joins the main line. Readings are from 0 to 500 psi with increments of five.

(*c*) Remove attaching parts at valve flanges.

(*d*) Remove valve and gaskets (110).

(*e*) Remove flanges and nipples (109) from S3 valve.

(3) (S3 valve, NE-50004, NE-50008, NE-50009, NE-50010 power units).

(*a*) Remove pilot capscrews (28, fig. 8-13 and lockwashers (27).

(*b*) Unscrew adapters (37) to disconnect pilot lines (38) from their respective metering valve and strainer assembly (41). Remove solenoid assembly.

(*c*) For disassembly of S3 valve solenoid and pilot valve assembly in four power units listed above, see paragraph 8-19*a*.

(*d*) Replace pilot capscrews (28) and lockwashers (27).

(*e*) Remove cap flange screws (53) and lockwashers (52), and lift off valve cap (51) with piston stop (55).

(*f*) Remove O-rings (34) from valve cap (51).

(*g*) Remove pipe plug (35).

(*h*) Remove roll pin (36).

(*i*) Remove piston stop (55) and O-ring (50) from cap (51).

(*j*) Remove piston stop lockwasher (33) and locknut (54).

(*k*) Lift valve spring (49) out of valve body (42).

(*l*) Lift out piston assembly (47) and disc nut (45). Remove piston ring (48).

(*m*) Remove disc nut (45) from piston (47), and valve disc (46) will fall away.

(*n*) Remove piston ring (48) from piston (47).

(*o*) Remove O-rings (43, 44) from grooves in head of valve body (42).

(*p*) Unscrew metering valve and strainer assemblies (41) from valve body (42).

(*q*) Remove metering valve caps (40) from valve.

(4) (S3 valve, NE-50000 power units

(*a*) Loosen adapter (21, fig. 8-1 from elbow (22).

(*b*) Loosen adapters (23), and remo tuve assembly (26).

(*c*) Remove cover nut (1), gasket (2 tube assembly (20) and nameplat (3).

(*d*) Remove O-ring (10) from tube a sembly (20).

(*e*) Remove housing (4), upper flu plate (5), insulating washer (6 coil (7), lower flux plate (8), an housing base (9) from solenoi base subassembly (11).

(*f*) Remove solenoid base subassembl from cap (33). Remove closin spring (12), core (13), and packin (14).

(*g*) Remove metering valve (19) fro valve body (25) and metering valv (35) from cap (33).

(*h*) Remove elbow (22) from meterin valve (19).

(*i*) Remove adjusting screw cap (15 from metering valves (19) an (35).

(*j*) Remove retainer ring (18) and ster (17) from metering valves (19) an (35).

(*k*) Remove O-ring (16) from ster (17).

(*l*) Remove cap (33) by removin screws (37) and lockwashers (36)

(*m*) Remove roll pin (39) from pisto stop (40). Loosen locknut (38 and remove piston stop (40). Re move locknut (38).

(*n*) Remove gasket (32) and pisto spring (31).

(o) Pull the assembled piston (29 from valve body (25).

(*p*) Remove piston rings (30), dis nut (27), and disc (28) from pis ton (29).

(*q*) Remove elbow (24) from valv body (25).

c. Cleaning, Inspection, and Repair. Refer to paragraph 8-13*c*.

d. Reassembly and Installation.

(1) S3 valve, NE-50004, NE-50008, NE-50009, and NE-50010 power units.

(*a*) Screw metering valve caps (40, fig. 8-13) on metering valve and strainer assemblies (41).

(*b*) Screw metering valve and strainer assembly (41) into base of valve body (42).

(*c*) Place O-rings (43 and 44) in grooves in head of valve body.

(*d*) Place piston ring (48) on piston (47).

(*e*) Place valve disc (46) on top of disc nut (45) and screw piston (47) into disc nut.

(*f*) Place assembled piston and disc nut into valve body (42).

(*g*) Place valve spring (49) into piston.

(*h*) Screw piston stop locknut (54) on piston stop (55). Slip on lockwasher (33).

(*i*) Install O-ring (50) and piston stop into valve cap (51).

(*j*) Insert roll pin (36) in the piston stop (55). Install pipe plug (35) in cap (51).

(*k*) Place valve cap (51) on valve body (42). Aline mounting holes, and fasten with body screws (53) and lockwashers (52).

(*l*) Replace O-rings (34) in cap (51).

(*m*) For reassembly of S3 valve solenoid, see paragraph 8-19.

(*n*) Place solenoid on valve and secure with pilot capscrews (28) and lockwashers (27).

(*o*) Install adapters (37) and pilot lines (38) into their respective metering valve and strainer assemblies (41).

(*p*) Adjust the valve (par. 3-109.

(2) S3 valve, NE-50000 power unit.

(*a*) Replace elbow (24 fig. 8-14) in valve (25).

(*b*) Replace piston rings (30), disc (28) and disc nut (27) on piston (29).

(*c*) Replace assembled piston (29) in valve body (25).

(*d*) Replace piston spring (31) in piston and position gasket (32) on valve body (25).

(*e*) Screw locknut (38) on piston stop (40), and screw piston stop (40) into valve cap (33).

(*f*) Insert roll pin (39) in piston stop (40).

(*g*) Aline holes between cap (33), gasket (32), and valve body (25). Fasten with capscrews (37) and lockwashers (36).

(*h*) Replace O-ring (16) on stem (17).

(*i*) Install stem (17) and retainer ring (18) in metering valves (19, 35).

(*j*) Screw adjusting screw caps (15) on metering valves (19, 35).

(*k*) Screw elbow (22) into metering valve (19).

(*l*) Screw metering valve (19) into valve body (25), and screw metering valve (35) in valve cap (33).

(*m*) Position packing (14) over the threads of solenoid base subassembly (11). Install closing spring (12) and core (13) in solenoid base subassembly (11), and screw solenoid base subassembly into cap (33).

(*n*) Position housing base (9), lower flux plate (8), insulating washers (6), coil (7), upper flux plate (5), housing (4), and nameplate (3) on the solenoid base subassembly (11).

(*o*) Replace O-ring (10) in tube assembly (20), and position the tube assembly and gasket (2) over the housing (4). Secure in place with cover nut (1).

(*p*) Install tube assembly (26) and tighten adapters (23).

(*q*) Screw and tighten adapter (21) into elbow (22).

(3) (S3 valve, NE-50000, NE-50004, NE-50008, NE-50009 power units)

(*a*) Screw S3 valve (23, fig. 7-1) to pipe (79).

(*b*) Install nipple (77) with union to valve (23).

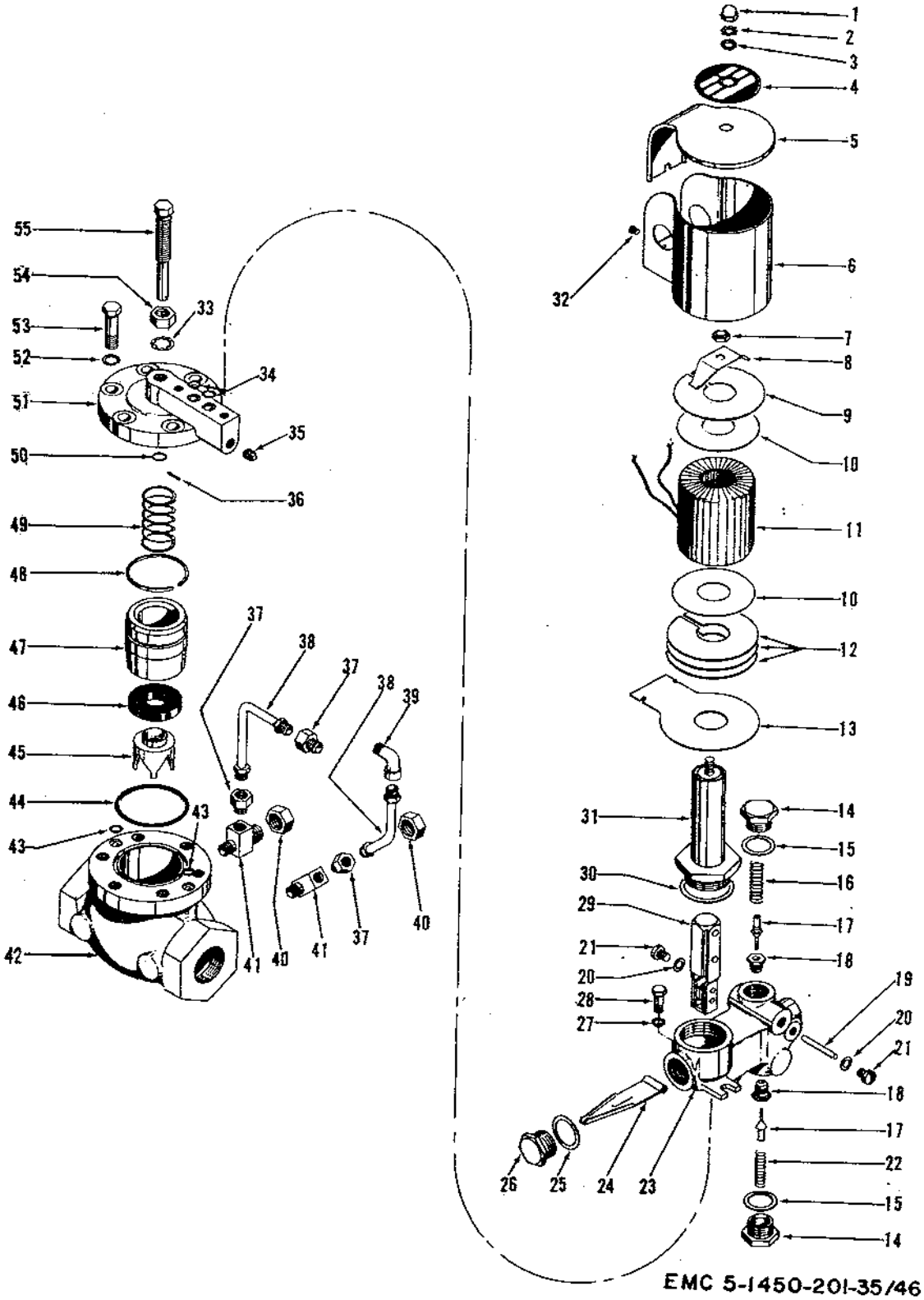

Figure 8-13. S8 and S7 valve, ASCO, exploded view.

1 Cover nut
2 Lockwasher
3 Grommet
4 Nameplate
5 Cover
6 Housing
7 Locknut
8 Spring washer
9 Upper flux plate
10 Insulating washer
11 Coil
12 Lower flux plate
13 Housing base
14 Disc guide cap
15 Guide cap gasket
16 Upper pilot valve spring
17 Pilot valve disc
18 Pilot valve seat
19 Lever pin
20 Pin bearing gasket
21 Pin bearing screw
22 Lower pilot valve spring
23 Pilot valve body
24 Pilot valve lever
25 End cap gasket
26 End cap
27 Lockwasher
28 Pilot valve capscrew
29 Plunger
30 Washer
31 Core
32 Cover screw
33 Lockwasher
34 O-ring
35 Pipe plug
36 Roll pin
37 Adapter
38 Pilot line
39 Elbow
40 Metering valve cap
41 Metering valve and strainer assembly
41 Valve body
43 O-ring
44 O-ring
45 Disc nut
46 Valve disc
47 Piston
48 Piston ring
49 Valve spring
50 O-ring
51 Cap
52 Lockwasher
53 Cap flange screw
54 Piston stop locknut
55 Piston stop

Figure 8-13—Continued.

(*c*) Position S3 valve with attached piping, in power unit.
(*d*) Connect unions (78, 79).
(*e*) Connect wiring to valve (23).
(*f*) Open valves (40, 63, 108).

(4) (S3 valve, NE-50010 power unit).
(*a*) Screw nipples (109, fig. 7-3) with flanges to S3 valve (108).
(*b*) Position valve and gaskets (110) in power unit and replace and tighten attaching parts.
(*c*) Connect wiring to valve (108).
(*d*) Open valves (36, 62, 89, 120).

8-17. ASCO Doors Bypass Valve S7

a. General. Doors bypass valve S7 (58, fig. 7-2) is a normally open two-way solenoid valve installed in the hydraulic system. It permits excess output of the number 1 pump to return directly to the reservoir during door operation. The S7 valve is used only in power units NE-50009 and NE-50010.

b. Removal and Disassembly.
(1) Close valves (47, 70, fig. 7-2).
(2) Disconnect wiring from solenoid (58).
(3) Disconnect piping by loosening union nuts at union elbows (6 and 111).
(4) Remove piping assembly containing valve S7 (58) and door relief valve (67) from power unit.
(5) Remove pipe nipple (7) from valve S7.
(6) Remove valve S7 from pipe nipple (8).

Note. Do not disturb remaining piping.

(7) Disassemble in accordance with paragraph 8-6*a*.

c. Cleaning and Inspection. Clean and inspect in accordance with paragraph 8-13c.

d. Reassembly and Installation.
(1) Reassembly in accordance with paragraph 8-16*d*.
(2) Install valve S7 (58, fig. 7-2) on pipe nipple (8).
(3) Install pipe nipple (7) in valve S7.
(4) Install piping assembly containing valve S7 (58), and door relief valve (67) in power unit and secure with

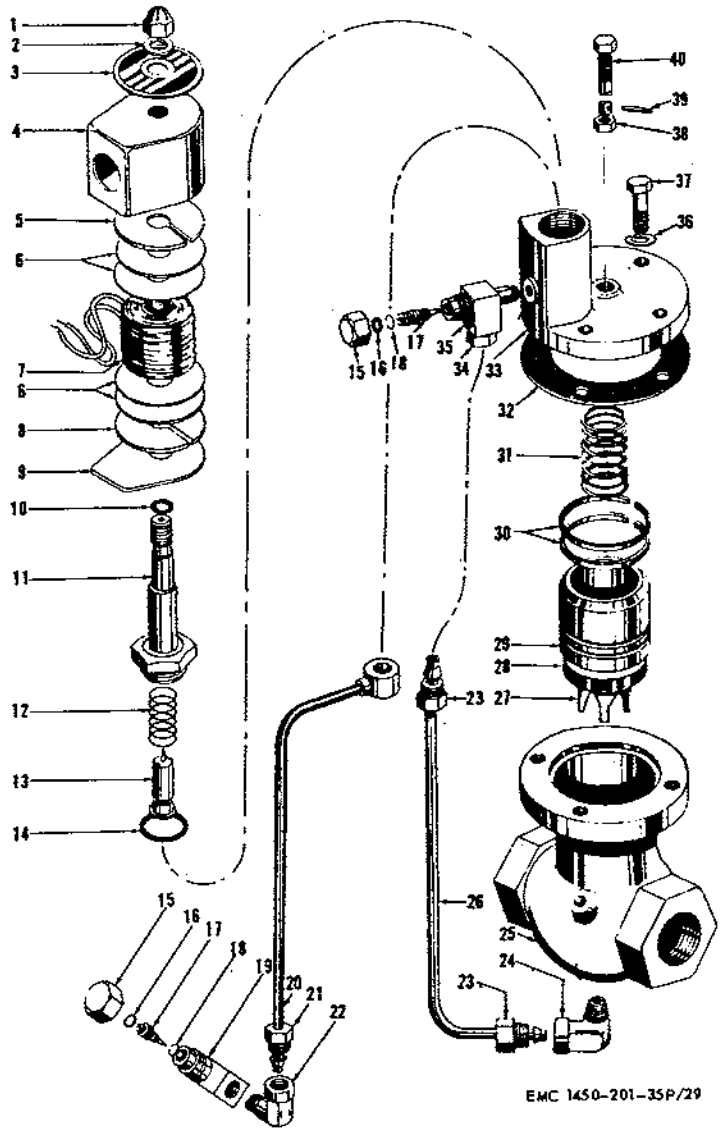

1	Cover nut	12	Closing spring	23	Adapter
2	Gasket	13	Core	24	Elbow
3	Nameplate	14	Packing	25	Valve body
4	Housing	15	Adjusting screw cap	26	Tube assembly
5	Upper flux plate	16	O-ring	27	Disc nut
6	Insulating washer	17	Stem	28	Valve disc
7	Coil	18	Retainer ring	29	Piston
8	Lower flux plate	19	Metering valve	30	Piston ring
9	Housing base	20	Tube assembly	31	Piston spring
10	O-ring	21	Adapter	32	Cap gasket
11	Solenoid base subassembly	22	Elbow	33	Cap

Figure 8-14. ASCO S3 valve, power unit NE-50000, exploded view.

34 Adapter
35 Metering valve
36 Lockwasher
37 Cap flange screw
38 Piston stop locknut
39 Roll pin
40 Piston stop

Figure 8-14—Continued.

union nuts at union elbows (6 and 111).

(5) Open valves (47 and 70).

(6) Connect wiring to valve (58).

8-18. Solenoid and Pilot Valve Assembly, ASCO SA1, SA2, and SA4 Valves

a. Removal and Disassembly

(1) *Removal.* Remove solenoid assembly in accordance with paragraph 8-13*b* for the S4 valve or paragraph 8-14*b* for the SA1 and SA2 valves.

Note. In the following disassembly procedures, figure 8-11 for the ASCO S4 valve is used. Components of the SA1 and SA2 valves are identical, except that they have only one metering valve.

(2) *Disassembly.*

(*a*) Remove cover nut (1, fig. 8-11), lockwasher (2), grommet (3), nameplate (4), and cover screw (38).

(*b*) Lift off cover (5) and housing (6)

(*c*) Remove locknut (7), spring washer (8), upper flux plate (9), upper insulating washer (10), coil (11), lower insulating washer 10, lower flux plate (12), and housing base (13).

(*d*) Remove core (14) from pilot valve body (31).

(*e*) Remove gasket (37).

(*f*) Lift out plunger (36) from pilot valve body.

Note. Be careful not to damage pilot valve body lever.

(*g*) Remove disc guide cap (15) and guide cap gasket (16) from pilot valve body.

(*h*) Lift out upper spring (17) and pilot disc (18).

Note. Procedures (*g*), (*h*), and (*i*) apply to either or both pilot valve assemblies. Do not confuse upper pilot valve spring (17) with lower pilot valve spring (27). They are not interchangeable.

(*i*) Remove pilot seat (19).

(*j*) Remove pin bearing screws (22) and washers (21).

(*k*) Tip body and slide out lever pin (20)

(*l*) Remove end cap (28) and end cap gasket (29).

(*m*) Pull out pilot valve lever (30).

(*n*) Remove nipples (26) and metering valves (24) on each side of pilot body.

Note. SA1 and SA2 valves have only one metering valve.

(*o*) Remove stop screw (25) from metering valve (24).

(*p*) Remove metering valve cap (23), metring valve stem (35), and O-ring (34) from each metering valve.

(*q*) Remove elbows (41) from metering valves (24).

b. Cleaning, Inspection, and Repair.

(1) Clean all metal parts with a dry, lint-proof cloth

(2) Inspect all parts for damage and defects and excessive wear. Dress minor thread damage with a fine file.

(3) Replace damaged or defective parts as necessary.

c. Reassembly and Installation.

(1) Reassembly.

(*a*) Connect metering valves (24) to pilot body (31) with nipples (26).

(*b*) Screw elbows, (41) into metering valves.

(*c*) Place O-ring (34) on valve stems (35), and insert into each metering valve.

(*d*) Turn valve stems down until they bottom. Insert stop screws (25) into side of metering valves, and replace metering valve cap (23).

(*e*) Insert lever (30), and secure with lever pin (20), pin bearing screws (22), and washers (21).

(*f*) Screw pilot seats (19) into position into the pilot valve body (31).

(*g*) Insert pilot disc (18) into upper seat (19).

(*h*) Place upper spring (17) over pilot disc (18).

(*i*) Install disc guide cap (15) and guide cap gasket (16).

(*j*) Place pilot disc (18) into lower pilot seat (19).

(*k*) Place lower spring (27) over pilot disc (18), and secure with guide cap gasket (16) and disc guide cap (15).

(*l*) Place plunger (36) in pilot body (31).

Note. End of pilot valve lever must be inserted through base of plunger.

(*m*) Screw end cap (28) with gasket (29) into pilot body (31)

(*n*) Screw core (14) with washer (37) over plunger (36).

(*o*) Install housing base (13), lower flux plates (12), lower insulating washer (10), coil (11), upper insulating washer (10), upper flux plate (9), spring washer (8), and locknut (7) over the core (14).

(*p*) Place housing (6) over assembled core.

(*q*) Attach cover (5) to housing (6) with cover screw (38).

(*r*) Place nameplate (4), grommet (3), and lockwasher (2) over protruding threaded end of core, and attach with cover nut (1).

(2) *Installation.* Install solenoid assembly in accordance with paragraph 8-13*d* for S4 valves, and 8-14*d* for SA1 and SA2 valves.

8-19. Solenoid and Pilot Valve Assembly, ASCO S3, S6, and S7 Valves

a. Removal and Disassembly

(1) *Removal.* Remove solenoid assembly in accordance with paragraph 8-14*b* for the S6 valve, paragraph 8-16*b* for the S3 and S7 valves.

(2) *Disassembly.*

(*a*) Remove cover nut (1, fig. 8-12), lockwasher (2), bushing (3), nameplate (4), and cover screw (33).

(*b*) Lift off cover (5) and housing (6).

(*c*) Remove locknut (7), spring washer (8), upper flux plate (9), upper insulating washer (10), coil (11), lower insulating washer (12), lower flux plate (13), and housing base (14).

(*d*) Remove core (32) from pilot valve body (30).

(*e*) Remove washer (31).

(*f*) Pull out plunger (30).

(*g*) Remove retainer (15) and washer (16) from pilot valve body (20).

(*h*) Remove upper pilot valve spring (17) and pilot disc (18).

(*i*) Remove pilot seat (19).

Note. Procedures (*g*), (*h*), (*i*) apply to either or both pilot valve assemblies.

Note. Do not confuse upper pilot valve spring (17) with lower pilot spring (24). They are not interchangeable.

(*j*) Remove pin bearing screws (21) and washers (22).

(*k*) Tip body and slide out lever pin (23).

(*l*) Remove end cap (27) and end cap gasket (26).

(*m*) Pull out lever (25).

(*n*) Remove adapters (36) from pilot body (20).

b. Cleaning, Inspection, and Repair.

(1) Clean and inspect and repair in accordance with paragraph 8-17b.

(2) Repair in accordance with paragraph 8-17*b*.

c. Reassembly and Installation.

(1) Screw adapters (36) into pilot body (20).

(2) Insert lever (25), and secure with lever pin (23), pin bearing screws (21), and washers (22).

(3) Screw pilot seats (19) into pilot valve body (20).

(4) Insert pilot disc (18) into upper pilot seat (19).

(5) Place upper spring (17) over pilot disc (18).
(6) Replace retainer (15) and washer (16).
(7) Place pilot disc (18) in lower pilot seat (19).
(8) Place lower spring (24) over pilot disc, and secure with washer (16) and retainer (15).
(9) Place plunger (30) in pilot body (20), so end of pilot valve lever is protruding through base of plunger.
(10) Screw end cap (27) with end cap gasket (26) into pilot body (20).
(11) Screw core (32) with washer (31) over core into pilot body (20).
(12) Install housing base (14), lower flux plate (13), lower insulating washer (12), coil (11), upper insulating washer (10), upper flux plate (9), spring washer (8), and locknut (7) over core (32).
(13) Place housing (6) over assembled solenoid.
(14) Attach cover (5) to housing (6) with cover screw (33).
(15) Place nameplate (4), bushing (3), and lockwasher (2) over protruding threaded end of solenoid base, and attach with cover nut (1).
(16) Install solenoid assembly in accordance with paragraph 8-14*d* the S6 valve, and paragraph 8-16*d* for the S3 and S7 valves.

8-20. ASCO O-Ring Solenoid Seal

a. General. Two O-rings (34, fig. 8-12) are located between the pilot body (20) and cap (46). If there is leakage between these parts, replace O-ring seals.

b. Removal.
(1) Isolate valve that leaks. Use a clean container to catch hydraulic fluid.
(2) Remove pilot capscrews (29) and lockwashers (28).
(3) Disconnect and remove pilot lines (38) by loosening fittings at adapters (36) and fitting and strainer assembly (39).
(4) Remove O-rings (34) from cap (46).

Note. Before installing O-ring, check attaching lugs on pilot valve body (20), to see if they are bent. Straighten if necessary.

c. Installation.
(1) Install O-rings (34) in cap (46).
(2) Replace solenoid and attach with pilot capscrews (29) and lockwashers (28).
(3) Connect pilot lines (38) by tightening fittings at adapters (36) and at fitting and strainer assembly (39).

8-21. Three-Inch and Four-inch Gate Valves

a. General. Three-inch or four-inch gate valves employed in this system are nonrising stem type valves. They are used as shutfof valves, and may have flanged or threaded ports.

b. Removal and Disassembly.
(1) Place elevator on locking bars. (par. 2-10).
(2) Drain hydraulic fluid from reservoir. (par. 7-98).
(3) Remove gate valve (104, fig. 7-3) by removing attaching parts at each flange of the valve.
(4) Remove gaskets (16).

Note. Except for the 3-inch gate valve near the main cylinder and plunger assembly, all large gate valves are equipped with flanges.

(5) Remove handwheel nut (6, fig. 8-15) and pull off handwheel (5).
(6) Remove nuts (4) and pull packing gland (7) from valve stem (13).
(7) Remove jamnuts (2) and remove square head bolts (1).
(8) Remove nuts (11) and bolts (3) attaching stuffing box (9) to valve cap (12). Pull off stuffing box and remove packing (8).
(9) Remove nuts (18) and bolts (10)attaching valve cap (12) to valve body (19), and pull off valve cap.
(10) Lift valve stem (13) and attaching valve disc (14) from valve body. Unscrew valve stem from valve disc.
(11) Unscrew seat retaining rings (15) from valve body. Remove seat retaining rings, valve seats (16), and gaskets (17) from valve body.

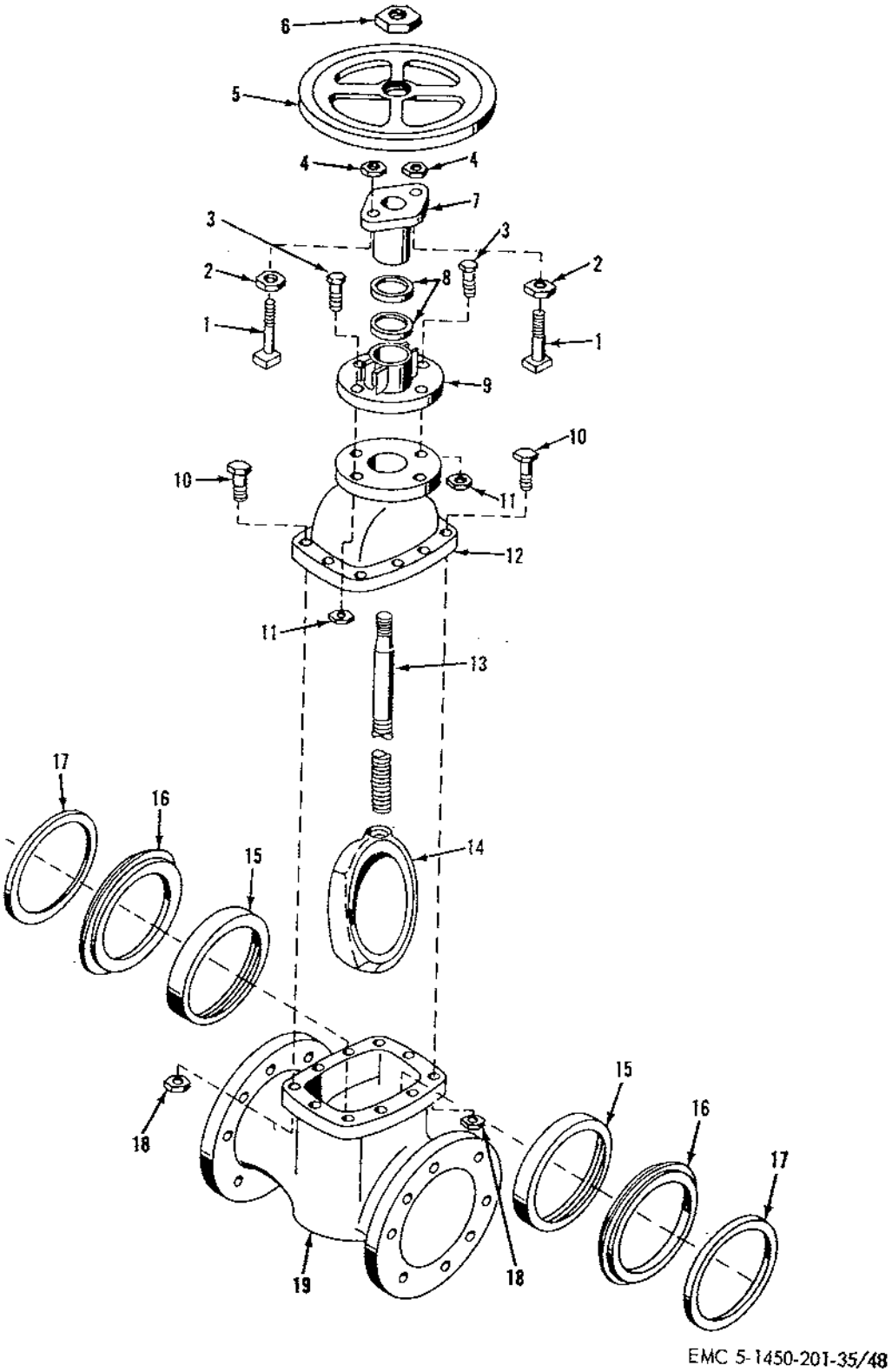

Figure 8-15. 3 or 4-inch gate valve, exploded view.

1	Bolt, square head	8	Packing	15	Seat retaining ring
2	Jam-nut	9	Stuffing box	16	Valve seat
3	Bolt	10	Cap bolt	17	Seat ring gasket
4	Nut	11	Nut	18	Nut
5	Handwheel	12	Valve cap	19	Valve body
6	Handwheel nut	13	Valve stem		
7	Packing gland	14	Valve disc		

Figure 8-15—Continued.

c. Cleaning, Inspection, and Repair.

(1) Wash all metal parts with potable water and dry thoroughly.

(2) Inspect for damage and defects and dress up minor thread damage with a small file.

(3) Replace damaged or defective parts as necessary.

d. Reassembly and Installation.

(1) Install the seat ring gasket (17, fig. 8-15) and valve seats (16) in valve body (19). Install and tighten seat retaining ring (15) on valve seat.

(2) Screw valve stem (13) halfway into valve disc (14). Slide valve disc into position against valve seats (16).

(3) Secure valve cap (12) on valve body (19) with nuts (18) and bolts (10).

(4) Secure stuffing box (9) on valve cap (12) with nuts (11) and bolts (3).

(5) Install packing (8) in stuffing box (9).

(6) Install packing gland (7) in stuffing box, with square head bolts (1), jamnuts (2), and nuts (4).

(7) Secure handwheel (5) to valve stem (13) with handwheel nut (6).

(8) Position new gaskets (16, fig. 7-3) on valve flanges.

(9) Place valve in position and secure with attaching parts.

(10) Fill reservoir and check level.

8-22. Gate Valves, Threaded Bonnet

a. General. Gate valves with threaded bonnets and ports are inside screw, rising stem type valves. They are used as door and locking bar shutoff valves.

b. Removal and Disassembly

(1) Prepare to remove gate valve (5, fig. 3-26) by first draining door hydraulic line. Open drain valve (8), and catch hydraulic fluid in a clean container.

Note. Three to five gallons may be expected to drain at most gate valve points.

(2) Disconnect union (6), and unscrew remaining half of union and pipe nipple at the tee below valve (5). Remove tee with valve (8).

(3) Disassemble valve to permit removal of the valve from the pipe. Remove valve body from pipe.

(4) Remove handwheel nut (5, fig. 8-16), and handwheel (4) from stem (8).

(5) Remove packing nut (3) from valve bonnet (7). Remove packing gland (2) and packing (1) from stuffing box.

(6) Remove valve bonnet nut (6) from valve body (10), and pull off bonnet (7) with stem (8) and valve wedges (9).

(7) Remove discs from stem and stem from bonnet.

c. Cleaning, Inspection, and Repair. Clean, inspect and repair in accordance with paragraph 8-15*c*.

d. Reassembly and Installation.

(1) Screw valve stem (8, fig. 8-16) into valve bonnet (7), and position valve wedges (9) on stem.

(2) Place valve bonnet (7) on valve body (10) with discs seated in body. Secure with valve bonnet nut (6) on threaded end of valve body.

(3) Install packing (1) in stuffing box of bonnet (7), and position packing gland (2) on top of packing. Secure with packing nut (3) on threaded end of bonnet.

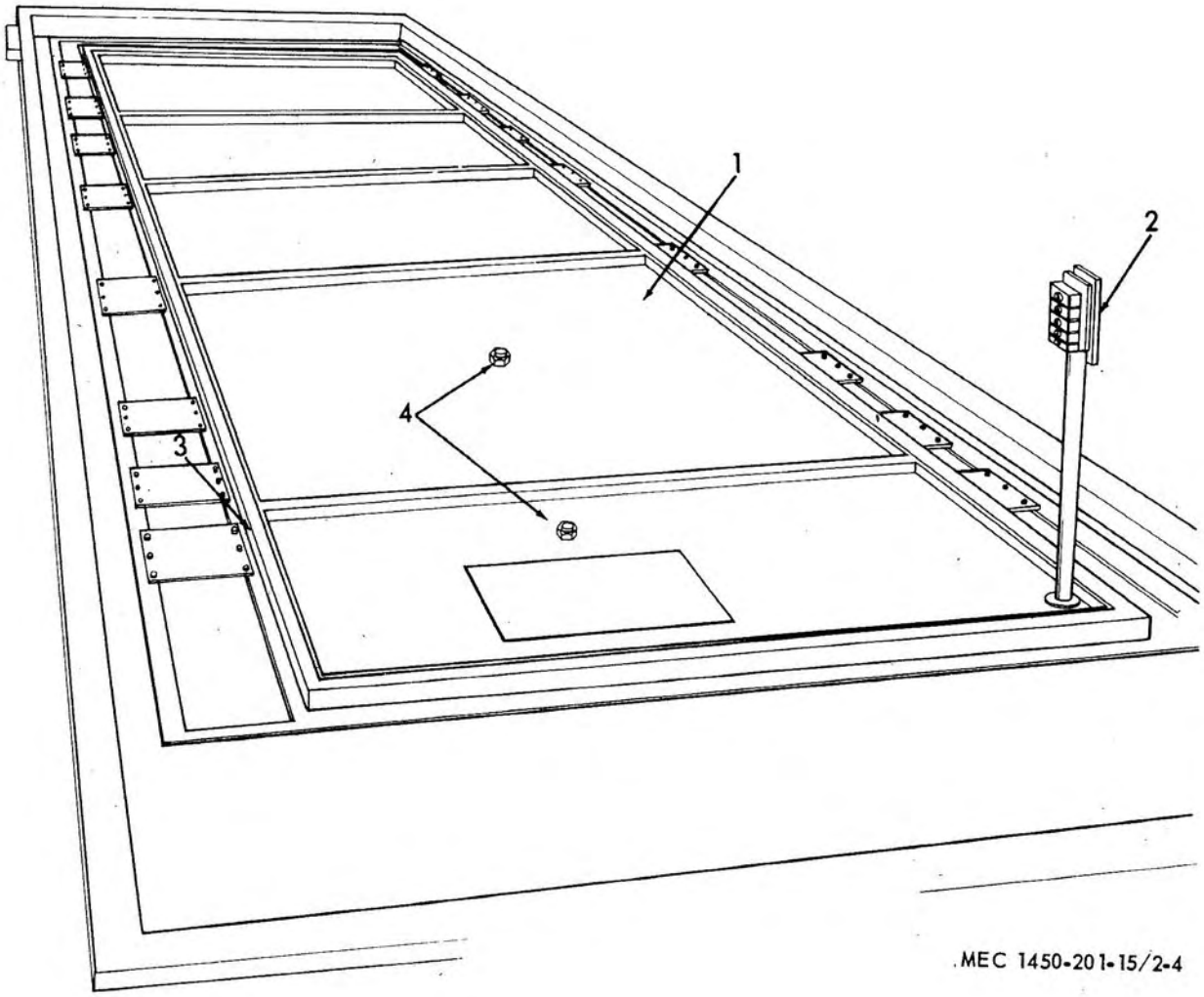

1 Elevator platform
2 Elevator control station
3 Seals
4 Platform drains

Figure 2-4. Elevator in raised position from forward end.

Section III. OPERATION OF EQUIPMENT

2-9. General

a. The instructions in this section are published for the information and guidance of the personnel responsible for the operation of the special purpose type elevator.

b. The operator must know how to perform every operation of which the elevator is capable. This section gives instructions on starting and stopping the elevator, basic motions of the elevator, and on coordinating the basic motions to perform the specific tasks for which the equipment is designed. Since nearly every job presents a different problem, the operator may have to vary given procedures to fit the individual job.

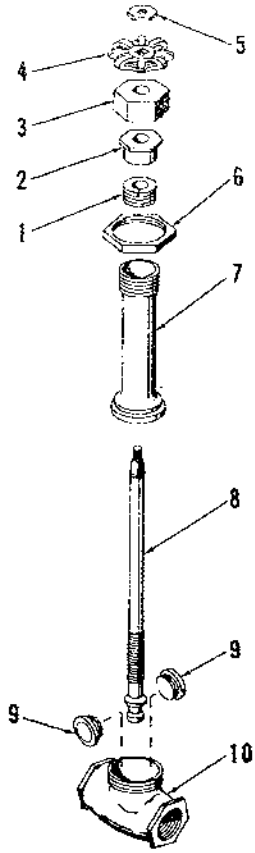

EMC 5-1450-201-35/49

1	Packing	6	Valve bonnet nut
2	Packing gland	7	Valve bonnet
3	Packing nut	8	Stem
4	Handwheel	9	Valve wedge
5	Handwheel nut	10	Valve body

Figure 8-16. Gate valve, threaded bonnet, and ports, exploded view.

(4) Place handwheel (4) on flattened end of valve stem (8), and secure with handwheel nut (5).

(5) Screw body of valve (51, fig. 3-26) onto pipe.

(6) Reassemble remaining parts in accordance with *a* above.

(7) Screw tee and nipple with drain valve (8) into bottom of gate valve (5).

(8) Screw nipple with half of union (6) into tee, and reconnect union.

(9) Close drain valve (8), and be sure valve (5) is open. Bleed in accordance with paragraph 3-125.

8-23. Globe Valves

a. General. The globe valve (9, fig. 3-26) is a rising stem type valve. It is used for filtering and flushing hydraulic fluid in the system.

b. Removal and Disassembly.

(1) Unscrew valve (9) from pipe nipple.

(2) Remove handwheel nut (5, fig. 8-17) from valve stem (9), and remove handwheel (4).

(3) Remove packing nut (3) and packing gland (2). Pull packing (1) from valve bonnet (7).

(4) Remove union bonnet ring (6) from valve body (12), and lift bonnet (7) with attached valve stem (9), disc locknut (8), and disc (10) from valve body.

(5) Unscrew valve stem (9) from bonnet (7), and remove disc locknut (8) and disc (10) from stem.

(6) Remove seat (11).

c. Cleaning, Inspection, and Repair. Clean, inspect, and repair in accordance with paragraph 8-15*c*.

d. Reassembly and Installation.

(1) Install seat (11) in valve body (12).

(2) Slip disc locknut (8) over stem (9), and screw disc (10) onto locknut (8). Tighten securely. Screw stem (9) into valve bonnet (7).

(3) Place valve bonnet (7) on valve body (12), and secure with union bonnet ring (6).

(4) Install packing (1) and packing gland (2) in valve bonnet (7), and secure with packing nut (3).

(5) Place handwheel (4) on end of valve stem (9), and secure with handwheel nut (5).

(6) Screw valve (9, fig. 3-26) onto nipple.

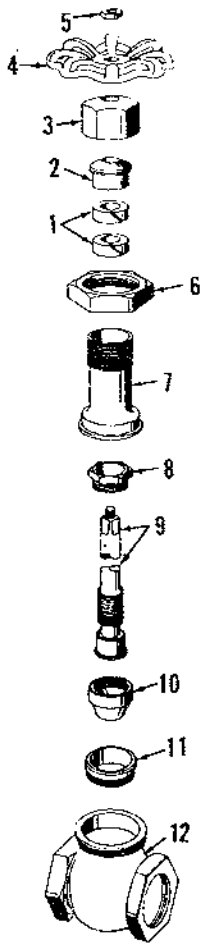

EMC 5-1450-201-35/50

1	Packing	7	Valve bonnet
2	Packing gland	8	Locknut, disc
3	Packing nut	9	Stem
4	Handwheel	10	Disc
5	Handwheel nut	11	Seat
6	Union bonnet ring	12	Valve body

Figure 8-17. Globe valve, exploded view.

8-24. Needle Valves

a. General. A needle valve (13, fig. 3-26) is located beneath the pressure gage and functions as a shutoff valve. Needle valves are also used in the four-way valve.

b. Removal and Disassembly.

(1) Remove needle valve (122, fig. 7-3) with assembled syphon (23), reducing bushings (127), pipe tee (124), and pressure gage (125) from pipe nipple (121).

(2) Remove valve (122) from syphon (123).

(3) Remove handwheel nut (3, fig. 8-18) from stem (8) and lift off handwheel (1) and washer (2).

(4) Remove packing nut (4). Lift out packing gland (5) and packing (6) from valve bonnet (7).

(5) Unscrew valve bonnet (7) with attaching valve stem (8) from valve body (10). Remove stem from bonnet.

c. Cleaning, Inspection, and Repair. Clean, inspect, and repair in accordance with paragraph 8-15*c*.

d. Reassembly and Installation.

(1) Screw valve stem (8, fig. 8-18) into bonnet (7) and screw bonnet into valve body (10).

(2) Install packing (6) and packing gland (5) in valve bonnet (7). Secure with packing nut (4).

(3) Install handwheel (1) and washer (2) on end of stem (8) and secure with handwheel nut (3).

(4) Screw syphon (123, fig. 7-3) with assembled reducing bushing (127), pipe tee (124), and pressure gage (125) into needle valve (122).

(5) Install needle valve (122) on nipple (121).

8-25. Safety Check Valves

a. General. In the event of a line or valve failure, the safety check valve will restrict the time of descent of the elevator from its highest position to its lowest position with maximum rated load to not less than 20 seconds.

b. Removal and Disassembly.

(1) With the elevator resting on the locking bars, isolate the main cylinder and plunger assembly by turning off shutoff valve (1, fig. 8-19).

(2) Disconnect union (2). Use a clean container to catch the hydraulic fluid.

(3) Swing the 3-inch pipe (7) between the union (2) and elbow (6) up out of the way.

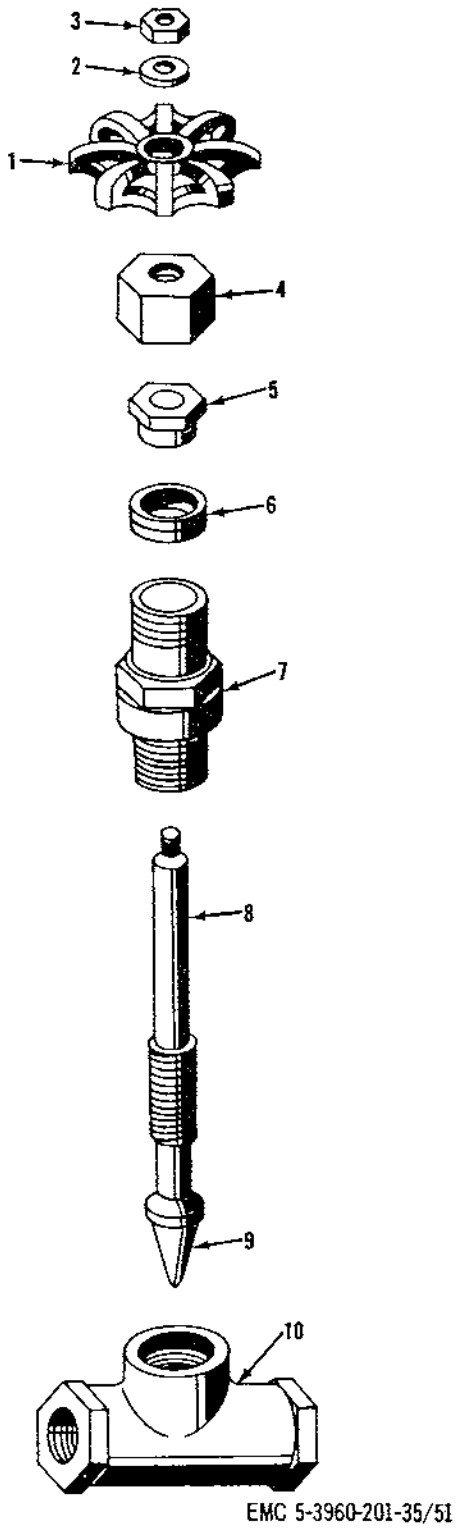

Figure 8-18. Needle valve, exploded view.

1	Handwheel	6	Packing
2	Washer	7	Valve bonnet
3	Handwheel nut	8	Stem
4	Packing nut	9	Disc
5	Packing gland	10	Valve body

Figure 8-18—Continued.

(4) Unscrew shutoff valve (1) and attached pipe (7) from elbow (6).
(5) Remove nipple (5) with elbow (6) attached from safety check valve (3).
(6) Unscrew safety check valve (3) from nipple (4) at main cylinder.
(7) Remove bonnet nuts (1, fig. 8-20) from bonnet studs (13).
(8) Lift off bonnet (2) and gasket (3).
(9) Lift out thrust plate assembly (5) with attached yoke (7), pin (6), and clapper (11).
(10) Remove pin (6) from thrust plate (5), releasing yoke (7).
(11) Remove cotter pin (10).
(12) Unscrew castellated nut (9) from threaded stud of clapper (11).
(13) Remove washer (8) and yoke (7).
(14) Unscrew seat ring (12) from valve body (4).

c. Cleaning, Inspection, and Repair. Clean, inspect and repair in accordance with paragraph 8-15*c*.

d. Reassembly and Installation.

(1) Screw seat ring (12, fig. 8-20) into valve body (4).
(2) Position yoke (7) over stud of perforated clapper (11). Secure in place with washer (8) and castellated nut (9).
(3) Install cotter pin (10).
(4) Position yoke (7) on thrust plate (5) and secure with pin (6).
(5) Insert thrust plate and attached parts into valve body (4) and seat perforated clapper (11) against seat ring (12).

Note. Thrust plate should seat in recess provided at top of valve body.

(6) Install gasket (3) and bonnet (2) and secure with bonnet nuts (1).
(7) Screw safety check valve (3, fig. 8-19) onto nipple (4) at main cylinder

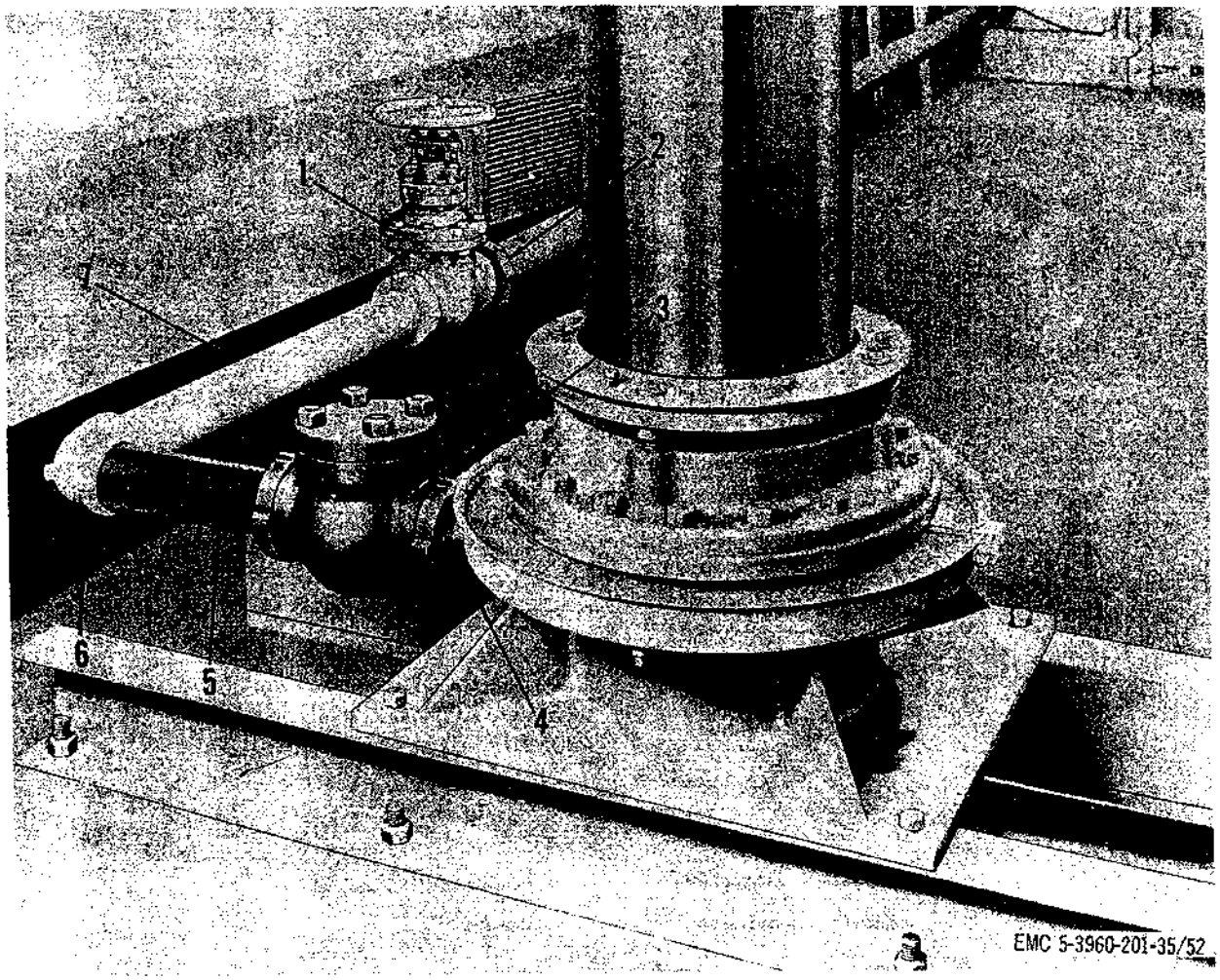

1 Shutoff valve
2 Union
3 Safety check valve
4 Nipple
5 Nipple
6 Elbow
7 Pipe

Figure 8-19. Safety check valve, installed view.

making sure that arrow on side of safety check valve points toward main cylinder.

(8) Screw nipple (5) with elbow (6) attached into safety check valve (3).

(9) Install shutoff valve (1) with attached pipe (7) by screwing pipe (7) into elbow (6).

(10) Aline the piping and tighten union nut at union (2).

8-26. Swing Check Valve

a. General. The swing check valve (11, fig. 7-1) is installed in the line to protect the system from reverse flow through the power unit. If the flow is stopped, the valve disc immediately seats, closing the valve.

b. Removal and Disassembly.

(1) Close gate valves (40, 63, 108, fig. 7-1).

(2) Remove attaching parts securing pipe flange assembly (10) to flange of shutoff solenoid valve S6 (8). Remove flange gasket (9).

(3) Disconnect union (13) and remove pipe flange assembly (10), with check valve (11) and half of union (13) attached.

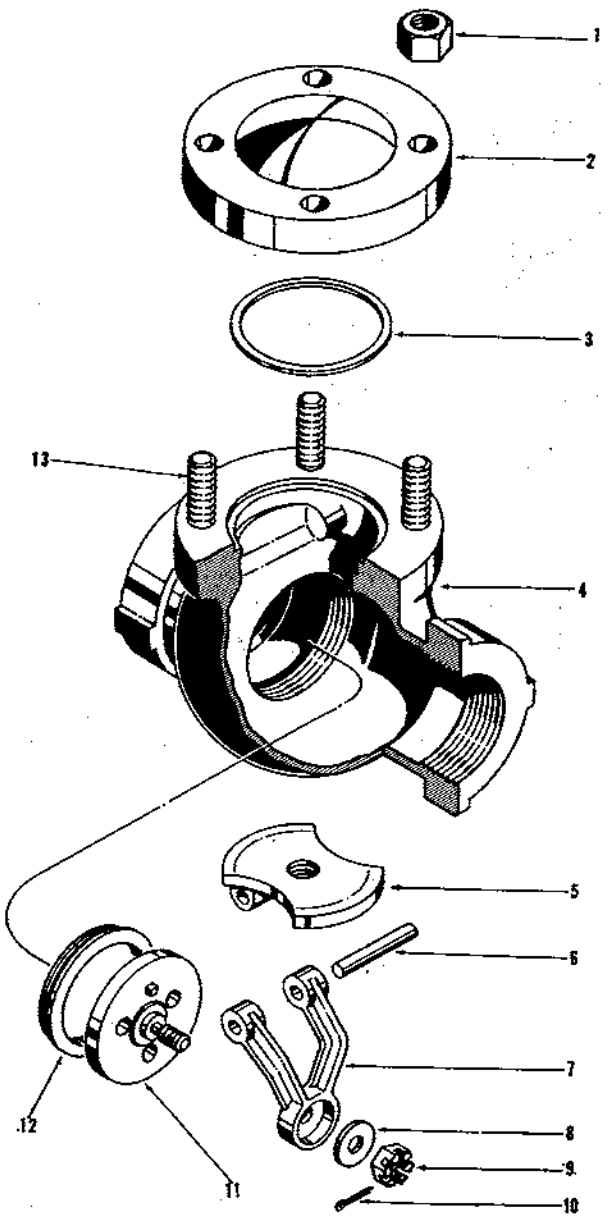

1	Bonnet nut	8	Washer
2	Bonnet	9	Castellated nut
3	Gasket	10	Cotter pin
4	Valve body	11	Clapper
5	Thrust plate	12	Seat ring
6	Pin	13	Bonnet stud
7	Yoke		

Figure 8-20. Safety check valve, exploded view.

(4) Remove remaining half of union (13) and nipple (12).

(5) Remove flange assembly (10) from check valve (11).

(6) Remove valve cap (7, fig. 8-21).

(7) Remove hinge pin (1) from valve body (2).

(8) Lift assembled valve disc (3) and hinge (4) from valve body.

(9) Pull cotter pin (8) from nut (6) and remove nut from stud (5).

(10) Remove stud from valve disc (3).

c. Cleaning, Inspection, and Repair. Clean, inspect, and repair in accordance with par. 8-15*c*.

d. Reassembly and Installation.

(1) Screw stud (5, fig. 8-21) into valve disc (3). Place hinge (4) over hinge stud and secure with nut (6) and cotter pin (8).

(2) Position assembled valve disc and hinge in valve body (2).

(3) Secure valve disc and hinge assembly in valve body (2) with hinge pin (1).

(4) Install and tighten valve cap (7).

(5) Install pipe flange assembly (10, fig. 7-1) in check valve (11).

(6) Install nipple (12) and union (13) in check valve (11).

(7) Position assembled pipe flange assembly (10), check valve (11), nipple (12), and union (13) into the power unit. Aline piping and tighten union (13).

(8) Insert flange gasket (9) and install attaching parts to secure flange assembly (10) to the flange of S6 valve (8).

(9) Open gate valves (40, 63, 108).

8-27. Door Flow Control Valve

a. General. The door flow control valve is installed in the hydraulic line leading to the rod end of the door cylinder. This valve regulates the speed of operation of the doors by restricting the flow of fluid to the door cylinder.

b. Removal and Disassembly.

(1) See paragraph 3-112 for location of door flow control valve.

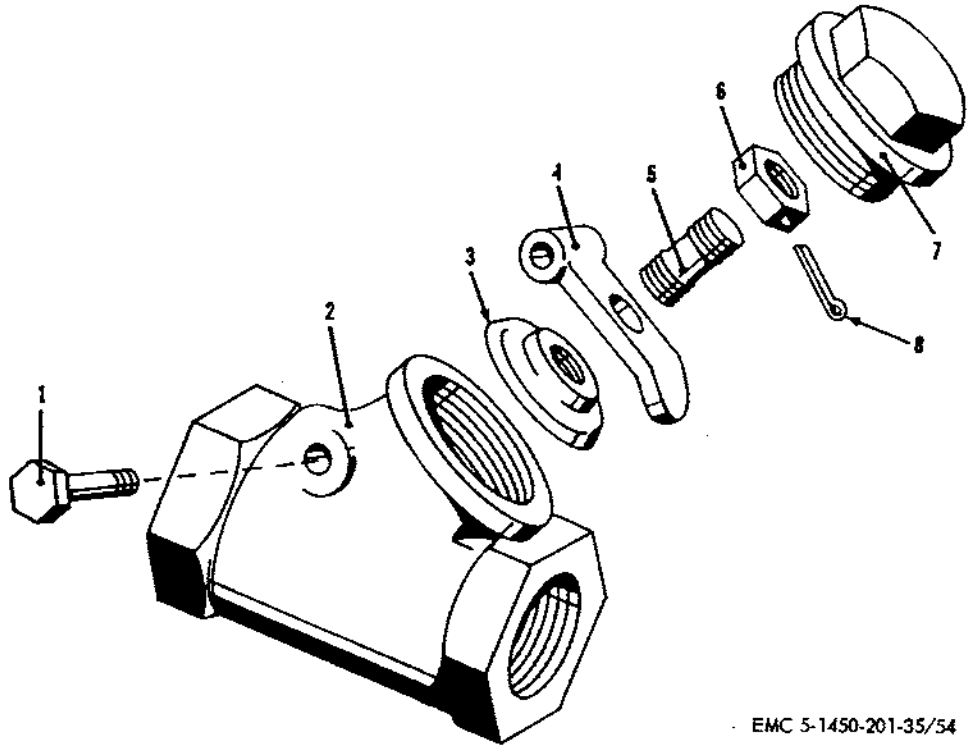

1 Hinge pin
2 Valve body
3 Valve disc
4 Hinge
5 Stud
6 Hex nut
7 Valve cap
8 Cotter pin

Figure 8-21. Swing check valve, exploded view.

(2) With doors open and elevator rasied to a convienient working height, disconnect door linkage by removing the hinge pin where short link (18, fig. 7-9) joins the long link (19).

(3) Use heavy wooden beams to brace door away from wall and provide working room.

(4) Open drain valve (7, fig. 3-26) and drain enough fluid from head end door line to relieve all pressure in the line . Provide a suitable clean container to catch the hydraulic fluid.

(5) Open drain valve (8, fig. 3-26) and drain fluid from rod end door line.

Note. Open bleeder valve at rod end of cylinder to facilitate drainage.

(6) Remove the hose to the rod end of the door cylinder by disconnecting the union immediately adjacent to the door flow control valve.

(7) Remove the flow control valve by unscrewing it from the piping.

(8) Remove the remaining half union from the flow control valve body.

(9) Close drain valves (8, 7, fig. 3-26).

(10) Remove acorn nut (1, fig. 8-22) from valve stem (7) and pull O-ring (2) from acorn nut.

(11) Unscrew valve stem locknut (3) from valve stem (7) and pull O-ring (2) from groove in valve stem locknut.

(12) Remove valve cap (4) from valve body (11). Remove O-ring (5) from valve stem cap.

(13) Remove valve stem (7) with attached valve needle (8) from valve cap (4).

(14) Remove valve needle locknut (6) from needle and unscrew needle from valve stem.

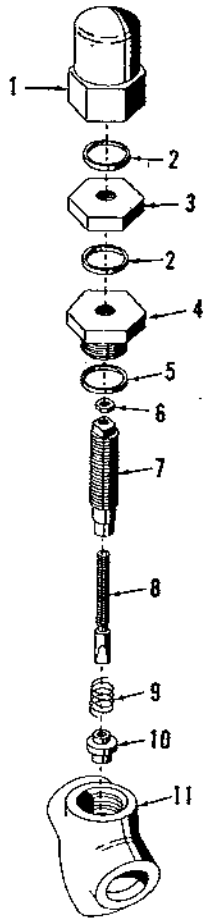

EMC 5-1450-201-35/55

1	Acorn nut	7	Valve stem
2	O-ring	8	Valve needle
3	Valve stem locknut	9	Spring
4	Valve cap	10	Spring seat
5	O-ring	11	Valve body
6	Valve needle locknut		

Figure 8-22. Door flow control valve, exploded view.

(15) Lift spring (9) and spring seat (10) from valve body (11).

c. Cleaning, Inspection, and Repair. Clean, inspect, and repair in accordance with paragraph 8-15c.

d. Reassembly and Installation.

(1) Place spring seat (10, fig. 8-22) in valve body (11) and position valve spring (9) on spring seat.

(2) Screw valve needle (8) into valve stem (7) and secure with valve needle locknut (6).

(3) Screw valve stem (7) with attached needle (8) into valve cap (4).

(4) Place O-ring (5) in gooove on valve cap (4). Insert the beveled end of valve needle (8) inside spring seat (10) and screw valve cap (4) into the valve body (11).

(5) Insert O-ring (2) in groove in valve stem locknut (3). Install and tighten the locknut on valve stem (7).

(6) Insert O-ring (2) in groove in acorn nut on valve stem (7).

(7) Install half union by screwing it into the flow control valve body.

Note. Install the union on the discharge side of the valve as indicated by the flow direction arrow.

(8) Screw the flow control valve on the door piping.

(9) Attach the hose to the rod end of the door cylinder by connecting the union at the flow control valve.

(10) Remove wooden braces and connect door linkage (18, 19, fig. 7-9).

(11) Bleed door lines and adjust valves in accordance with paragraph 3-125.

8-28. Locking Bar Flow Control Valve

a. General. The locking bar flow control valve (46, fig. 7-4) is used in power unit NE-5007. This valve regulates the flow of fluid from the locking bar cylinders thereby controlling the rate of speed with which the locking bars engage or disengage. The valve normally is adjusted to allow free flow in the locking bar hydraulic circuit.

b. Removal and Disassembly.

(1) Close gate valves (18, 30, 33, 49, 7[illegible], fig. 7-4).

(2) Disconnect union (47) at locking bar flow control valve (46).
(3) Swing pipe assembly (48) to one side and remove union (47) from valve (46).
(4) Remove locking bar flow control valve (46) from pipe assembly (68).
(5) Unscrew bottom plug (12, fig. 8–23) from valve body (8) and pull O-ring (11) from its seat on bottom plug (12).

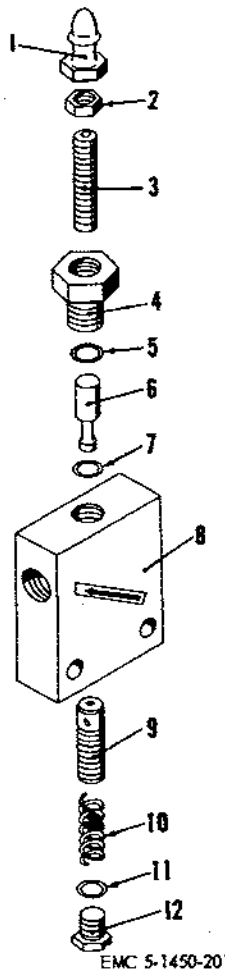

1	Cap nut	7	O-ring
2	Jamnut	8	Valve body
3	Adjusting screw	9	Spool
4	Adjustment plug	10	Spring
5	O-ring	11	O-ring
6	Adjustment plunger	12	Bottom plug

Figure 8–23. Locking bar flow control valve, exploded view.

(6) Remove spring (10) and spool (9) from valve body (8).
(7) Remove capnut (1) and jamnut (2) from adjuusting screw (3) and remove adjusting screw from adjustment plug (4).

Note. Be careful to note the number of exposed threads of screw (3) for reassembly purposes.

(8) Unscrew adjustment plug (4) from valve body (8) and pull O-ring (5)
(9) Lift adjustment plunger (6) from valve body (8). Remove O-ring (7) from shoulder in valve body.

c. Cleaning, Inspection, and Repair. Clean, inspect, and repair in accordance with paragraph 8–15*c*.

d. Reassembly and Installation.

(1) Place spool (9) and spring (10) in bottom of valve body (8).
(2) Install O-ring (11) on seating surface of bottom plug (12) and install bottom plug in valve body.
(3) Place O-ring (7) on shoulder in valve body (8).
(4) Place O-ring (5) in groove in top adjustment plug (4).
(5) Slide adjustment plunger (6) into adjustment plug (4) and install adjustment plug in valve body (8).
(6) Install adjusting screw (3) in threaded hole in top of adjustment plug (4) and secure with jamnut (2).

Note. Be sure to leave the same number of threads exposed as noted in the disassembly procedures.

(7) Install capnut (1) on screw (3).
(8) Screw union (47, fig. 7–4) into upper threaded hole in flow control valve (46).

Note. Make sure arrow on side of valve points to the threaded hole in which union (47) is installed.

(9) Screw locking bar flow control valve (46) onto pipe assembly (68).
(10) Swing pipe assembly (48) into place and connect union (47).
(11) Open gate valves (18, 30, 33, 49, and 70).

8-29. Hydraulic Fluid Sediment Strainer

a. Removal and Disassembly.

(1) Drain reservoir.

(2) Remove access plate attaching screws (1, fig. 3-24) and lift off cover plate (18) and gasket (3).

(3) Remove suction strainer (3, fig. 7-1) from pipe and flange assembly (4, 62).

(4) Remove strainer coupling nut (1, fig. 8-24). Lift off end cover (2) and gasket (3) from metal housing (5).

(5) Pull metal housing and filter unit from base and centering tube (6).

b. Cleaning, Inspection, and Repair.

(1) Clean all parts with potable water and dry thoroughly.

(2) Inspect for thread damage.

(3) Inspect for clogging and make sure all particles have been removed during cleaning.

(4) Replace all damaged or defectiv parts as necessary.

c. Reassembly and Installation.

(1) Place filter (4) inside metal housin (5), and place assembly over base an centering tube (6).

(2) Place gasket (3) in end cover (2) and place cover over centering tub (6) so that it seats on the end of th filter (4). Secure with coupling nu (1).

(3) Install suction strainer (3, fig. 7-1 on pipe and flange assembly (4, 62)

(4) Install gasket (3, fig. 3-24) an plate (18). Secure with access plat attaching screws (1).

(5) Fill reservoir.

8-30. Sediment Cage

For repair and replacement procedures fo sediment gage (9, fig. 3-24) refer to para graph 3-120.

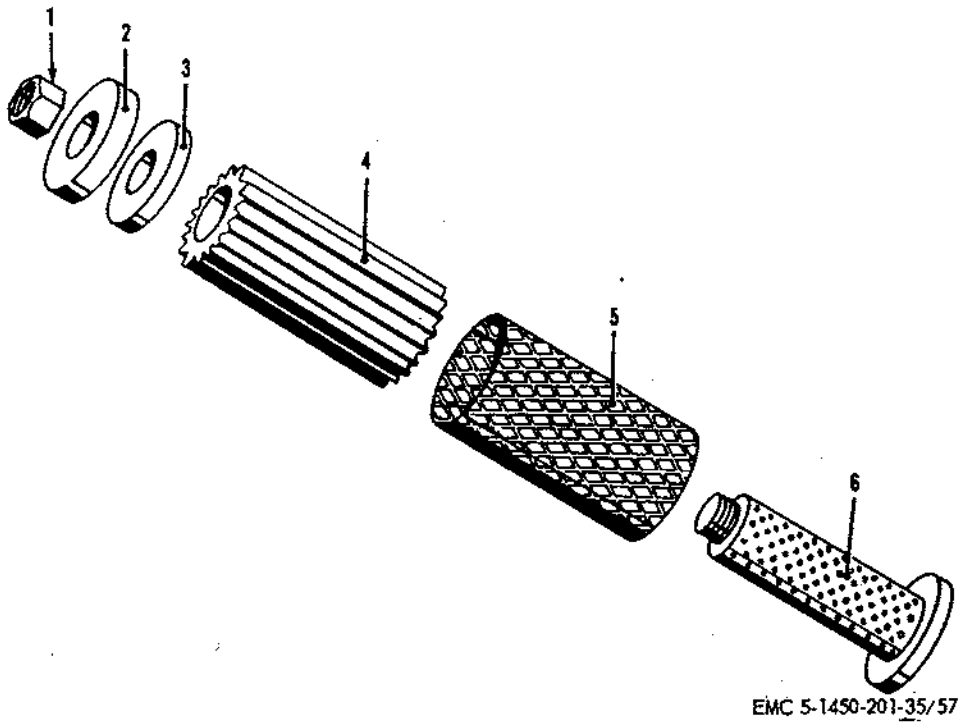

1 Nut strainer coupling
2 End cover
3 Neoprene cork gasket
4 Filter
5 Expanded metal housing
6 Base and centering tube

Figure 8-24. Hydraulic fluid sediment strainer, exploded view.

8-31. Hydraulic Fluid Level Sight Gage

For repair and replacement procedures for hydraulic fluid level sight gage (17, fig. 3-24), refer to paragraph 3-119.

8 32. Pressure Gage

a. Removal.

(1) Close shutoff valve (13, fig. 3-26).

(2) Remove pressure gage (10) from pipe tee (12).

b. Replacement of Glass.

(1) Remove flange on face of pressure gage (10).

(2) Remove glass and gasket. Replace glass and position gasket in flange.

(3) Install flange on face of pressure gage.

c. Installation.

(1) Install pressure gage (10) in pipe tee (12).

(2) Open shutoff valve (13).

8-33. Line Strainer

a. General. A strainer (15, fig. 3-24) is installed in the main hydraulic line from the power unit to the main cylinder and plunger assembly. It is used to prevent foreign particles from being carried to the power unit.

b. Removal and Disassembly.

(1) Close all manual valves (40, 63, 108, fig. 7-1), and drain the 3-inch line to the main cylinder at union (2, fig. 8-19) ahead of the 3-inch shutoff valve (1). Catch hydraulic fluid in a clean container.

(2) Disconnect union (14, fig. 3-26) ahead of line strainer (15).

(3) Remove strainer and nipple with half of union from line, and unscrew strainer.

(4) Remove pipe plug (1, fig. 8-25).

(5) Remove capscrews (2), and pull off end cover (3), being careful not to damage gasket (5).

(6) Pull out strainer element (4).

c. Cleaning, Inspection, and Repair. Clean, inspect, and repair in accordance with paragraph 8-29*b*.

d. Reassembly and Installation.

(1) Insert strainer element (4, fig. 8-25) into strainer body (6).

(2) Position gasket (5) and end cover (3) on strainer body, and attach securely with screws (2).

(3) Insert and tighten pipe plug (1).

(4) Screw nipple with half of union (14, fig. 3-26) into strainer (15). Screw other end of strainer onto pipe being sure that strainer element points downward and toward the power unit, as shown in figure 3-26.

(5) Reconnect and tighten union (14).

(6) Open manual valves.

8-34. Locking Bar Cylinder

a. General. Four locking bars are used in installations utilizing power units NE-5007, NE-50000, NE-50008, NE-50009, and NE-50010. Six locking bars are used in installations using power unit NE-50004. The locking bars support the platform assembly at ground level.

b. Removal and Disassembly.

(1) With the elevator doors closed, turn off main power switch.

(2) Close shutoff valves (1, 2, fig. 3-26) isolating the cylinder.

(3) Use a clean container to catch the hydraulic fluid, and disconnect unions (23, 24, fig. 7-11).

(4) Remove locking bar hoses (25, 27), elbows and nipples from locking bar cylinder (26).

(5) Remove nuts from bolts (10) and pull bolts out until they are free of the cylinder eye, but still holding the locking bar linkage.

Note. This will prevent the locking bar from falling forward.

(6) Pump the cylinder to empty the remaining fluid.

(7) Remove bottom bolt and lift out the cylinder.

Warning: **Observe and perform the safety precaution listed on the inside cover of this manual. This action will eliminate hazards to personnel and insure against equipment damage.**

c. The elevator can be operated from any of three positions: The console room (14, fig. 1-1), the master control station (15), or the elevator control station (1, fig. 2-1). This manual deals in detail with operation from the latter two stations only.

Note. Initially, it is advisable to place the rotary selector switch (7, fig. 2-2) in the vertical position shown. This activates the master control station itself.

2-10. Starting and Operation

a. Preparation for Starting.

(1) Perform the Daily Preventive Maintenance Services (par. 3-7).

(2) Lubricate the equipment in accordance with the current lubrication order.

(3) Before operation is possible, the main power switch lever (6, fig. 2-3) must be turned to ON. Rotate the lever firmly, counterclockwise, about 45°. This action sends 416-volt power to the motor power switch contacts in motor number 1 and motor number 2 starter cabinets.

b. Starting and Operation (Master Control Station).

(1) With the rotary selector switch (7, fig. 2-2) in the vertical position, the master control station is ready to function. The equipment should be in the storage position: Elevator down and doors closed. All control buttons actuate momentary contact type switches and need not be held in after action begins.

(2) Press the top button labeled DOORS OPEN (2, fig. 2-2) to open the doors. Motor number 1 in the power unit is started and will operate until the doors are fully open, at which time the DOORS OPEN limit switches are actuated. This breaks the motor starter circuit and stops the power unit.

(3) The third button (4) labeled ELE-VATOR UP starts motor number 1 ir the power unit and begins to raise the elevator. After 2 seconds, motor number 2 is automatically started and maximum rising speed is achieved. When the platform is 9 to 1: inches from ground level, a limit switch is actuated which stops the second pumping unit for slower ground level approach. The platform in rising, travels 3 to 4 inches above the inner frame at ground level; the locking bars are automatically actuated by a limit switch which also stops the power unit. The platforn then settles back and is positively engaged by the locking bars.

Note. The elevator will not rise abov floor level unless the doors have first bee opened.

(4) The fourth button, ELEVATOI DOWN (5), when pressed, start motor number 1 in the power uni raising the platform enough to clea the locking bars which are then re tracted. The retracted locking bar engage limit switches which cut of the power unit and complete a circui to enable lowering. The platforr lowers into the magazine at a rate o speed controlled by a 3-inch solenoi operated lowering valve. As th platform reaches the pedestals, it rate of descent is reduced automat cally.

(5) Press the second button labele DOORS CLOSE (3), to close th doors. The power unit will start in mediately, and will continue operatio until the doors are completely close When the doors are fully close limit switches are engaged and th power unit is automatically stoppe

c. Starting and Operation (Elevator Control Station).

(1) Rotate the rotary selector switch o the master control station (7) to it maximum clockwise position. This a tivates the elevator control statio

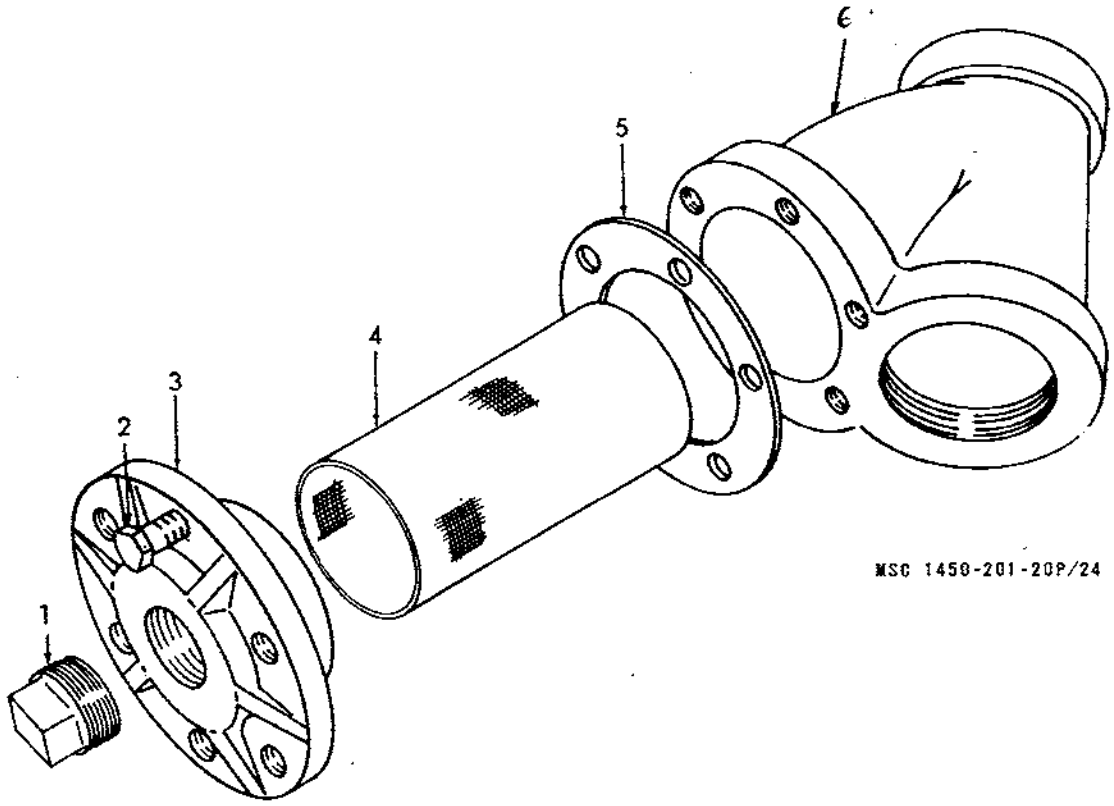

1 Pipe plug
2 Screw
3 End cover
4 Strainer element
5 Gasket
6 Strainer body

Figure 8-25. Line strainer, exploded view.

(8) Remove capscrews (1, fig. 8-26) from head end pivot (2).

(9) Remove bleeder valve (5) from head end cover (4).

(10) Remove pipe plug (3) from cylinder cover (4) and insert a suitable length of 1/2-inch pipe to be used as a lever. Using this lever, turn cylinder cover (4) until beveled edge of retaining ring (6) appears at the opening in the cylinder body (16).

(11) Insert screwdriver under beveled edge to start retaining ring (6) through the opening. Continue turning until exactly one revolution has been made.

Caution: **The other end of th retainer ring contains a tip which inserted in the cover. If the cover turned too far, the tip will be sheare off, and replacement will be nece sary.**

(12) Remove retainer ring and pull of cylinder cover (4). Remove cylinde O-ring (7).

(13) Loosen jamnut (28) and unscrew ro end eye (29) from piston rod (15) Remove jamnut (28) from rod en eye (29).

(14) Remove bleeder valve (30) from cyl inder cover (20).

(15) Remove pipe plug (19) from cylinder cover (20) and repeat (3), (4), and (5) above, for rod end cylinder cover.

(16) Remove cylinder O-ring (17) from cylinder cover (20) and pull piston rod (15) with assembled piston and packing parts from cylinder body (16).

(17) Remove self-locking nut (8) and slide piston support (9), piston (11), and piston support (13) from piston rod (15).

(18) Pull piston packing (10) from piston support (9) and piston packing (12) from piston support (13).

(19) Pull O-rings (14) from piston rod (15).

(20) Remove snapring (27) from end cover (20).

(21) Slide piston rod wiper (26), shims (24 and 25), female packing adapter (23), piston rod packing (22), and male packing adapter (21) from cylinder cover (20).

c. Cleaning, Inspection, and Repair.

(1) Clean all metal parts with potable water and dry thoroughly.

(2) Inspect all parts for excessive wear, scoring, and other defects or damage.

(3) Replace all O-rings, packing, and defective or damaged parts.

d. Reassembly and Installation.

(1) Install O-rings (14) on piston rod (15).

Note. Lubricate all O-rings with a light coat of grease before installing.

(2) Position piston support (13), piston packing (12), piston (11), piston packing (10), and piston support (9) on piston rod (15). Secure with nut (8), packing (12), piston (11), piston packing (10), and piston support (9) on piston rod (15). Secure with self-locking nut (8).

(3) Install assembled piston rod (15) through cylinder body (16).

(4) Install cylinder O-ring (17) on cylinder cover (20). Position cylinder cover in cylinder body (16) so that retaining ring groove is in line with cylinder opening.

(5) Position retaining ring (18) around cylinder and direct hooked end into cylinder opening. Turn cylinder cover (20) until retaining ring (18) is completely returned to its internal position.

(6) Install bleeder valve (30) and pipe plug (19) in end cover (20).

(7) Install cylinder O-ring (7) on cylinder cover (4). Position cylinder cover in cylinder body (16) so that retaining ring groove is in line with cylinder opening.

(8) Position retaining ring (6) around cylinder and direct hooked end into cylinder opening.

(9) Turn cylinder cover (4) until retaining ring (6) is completely returned to its internal position.

(10) Install bleeder valve (5) and pipe plug (3) in end cover (4).

(11) Position head end pivot (2) on cylinder cover (4) and secure with capscrews (1).

(12) Position male packing adapter (21), piston rod packing (22), female packing adapter (23), shims (24 and 25), and piston rod wiper (26) in cylinder cover (20). Secure with snapring (27).

(13) Screw jamnut (28) loosely on rod end eye (29). Screw rod end eye in piston (15), tighten jamnut (29).

Note. The distance between centers of the rod end eye and the pivot eye should be 12 11/32 inches, when the piston is bottomed.

(14) Position the locking bar cylinder (26, fig. 7-11) in the support bracket (30) and install bottom bolt (10), nut (5), and cotter pin (6).

Note. Make certain that locking bars are fully retracted, and that operating linkages are locked over center against their stops.

(15) Bottom the locking bar cylinder manually, being sure that the middle bolt (10) is not through the eye.

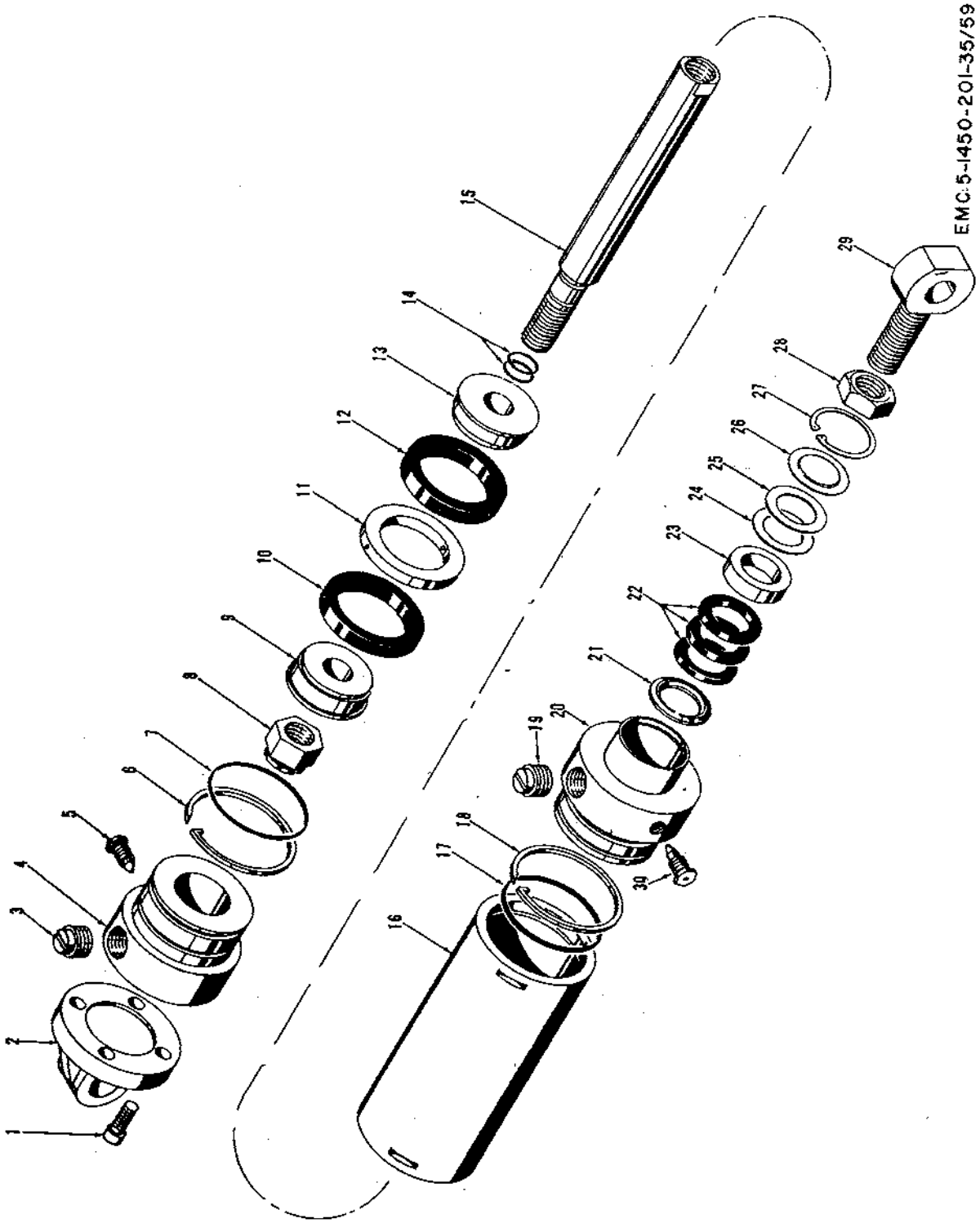

EMC 5-1450-201-35/59

Figure 8-9B. Tooling box [illegible]

1	Capscrew	11	Piston	21	Rod packing male adapter
2	Head end pivot	12	Piston packing	22	Piston rod packing
3	Pipe plug	13	Piston support	23	Female rod packing adapter
4	Head end cover	14	Piston rod O-rings	24	Shim
5	Bleeder valve	15	Piston rod	25	Shim
6	Retainer ring	16	Cylinder body	26	Piston rod wiper
7	Cylinder O-ring	17	Cylinder O-ring	27	Snapring
8	Self-locking nut	18	Retainer ring	28	Jamnut
9	Piston support	19	Pipe plug	29	Rod end eye
10	Piston packing	20	Rod end cover	30	Bleeder valve

Figure 8-26—Continued.

(16) Turn the cylinder eye until bolt (10) can be inserted through the eye and linkage, with the cylinder still bottomed.

(17) Remove middle bolt (10) and shorten the piston by turning the eye two complete turns clockwise.

(18) Extend the rod slightly by pulling up the piston.

(19) Install middle bolt (10), spacers, nut, and cotter pin.

Note. The middle bolt should not be so tight that it will bind the linkage on the locking bar.

(20) Install nipples, elbows, and hoses (25, 27) in the cylinder (26). Connect unions (23, 24).

(21) Open shutoff valves (1, 2, fig. 3-26) and bled the cylinder.

8-35. Door Operating Cylinder

a. General. Four cylinders are installed to open and close the doors of the installation. Each door has two cylinders associated with it.

b. Removal and Disassembly.

(1) With door open and main power switch OFF, close shutoff valves (4, 5, fig. 3-26) isolating the cylinders.

(2) Disconnect long link (19, fig. 7-9) from short link (18), using wood blocks at least 4 by 4 inches square and about 3 feet long to brace doors (9) away from wall.

(3) Use a clean container to catch the hydraulic fluid, and disconnect the hoses from the cylinder.

(4) Using the short link (18) as a lever, pump the cylinder dry.

(5) Disconnect cylinder bearing block from short link (18), and remove hinge pin (1) to free cylinder.

(6) Remove capscrews (1, fig. 8-27) to free head end pivot (2).

(7) Remove pipe plug (4) from cylinder cover (5). Insert a suitable length of 3/4-inch pipe to be used as a lever. Using this lever, turn cylinder cover (5) until beveled edge of retaining ring (6) appears at the opening in cylinder body (44).

(8) Insert screwdriver under be edge to start retaining ring through the opening, and cont turning through exactly one re tion.

Caution: **The other end of retainer ring contains a tip whic inserted in the cover. If the c is turned too far, the tip wil sheared off, and replacement wil necessary.**

(9) Remove retainer ring, and pull cylinder cover (5). Remove cyli O-ring (7).

(10) Remove bleeder valve (3) from cy der cover (5).

(11) Loosen jamnut (25) and unsc bearing block (26). Press bea (27) out of bearing block (26). move jamnut (25).

(12) Remove pipe plug (23) from cylin cover (41) and repeat (2), (3), above for rod end cylinder co

(13) Slide cylinder body (4)) from pi rod (45).

(14) Remove cylinder O-ring (42) f cylinder cover (41).

(15) Unscrew jamnut (34), and rem cushion needle valve (35) and O-r (36).

(16) Remove bleeder valve (37) from inder cover (41).

(17) Unscrew pipe plug (39) and rem check valve spring (40) and ch valve ball (38) from cylinder co (41).

(18) Remove capscrews (8) and wash (9) from piston support (10).

(19) Slide piston support (10) from pis rod (45), and remove piston packi (12), piston packing ring (11), a piston (13).

(20) Remove split ring (15).

(21) Slide piston support (18) from pist rod (45). Remove piston packi (16) and piston packing ring (1 from support (18).

(22) Slide off rod end cushion (2 and remove cushion washer (2 and cushion spring (22).

(23) Remove O-rings (14, 19) from piston rod (45).

(24) Remove snapring (28) from cylinder cover (41), and piston rod wiper (29), shims (30, 31), female adapter (32), piston rod packing (33), and male adapter (24) from cylinder cover.

c. Cleaning, Inspection, and Repair.

(1) Clean all metal parts with potable water and dry thoroughly.

(2) Inspect all parts for excessive wear, scoring, deformation or damage.

(3) Replace all defective parts.

(4) Replace all O-rings and packing.

d. Reassembly and Installation.

(1) Install O-rings (14, 19) on piston rod (45).

Note. Lubricate all O-ring with a light coat of grease before installing.

(2) Install cushion spring (22) and cushion washer (21) on piston rod (45). Install rod end cushion (20). Rod end cushion must be installed with beveled end against washer and spring.

(3) Slide piston support (18) on piston rod (45), and replace piston packing ring (17) and piston packing (16).

(4) Install split ring (15).

(5) Position piston packing ring (11) and piston packing (12) on piston support (10). Install piston (13) and piston support on piston rod (45).

(6) Secure piston supports (10, 18) with washers (9) and capscrews (8).

(7) Slide assembled piston rod (45) into cylinder body (44).

(8) Install O-ring (42) on cylinder cover (41). Position cylinder cover in cylinder body. (44) so that retaining ring groove is in line with cylinder opening.

(9) Position retaining ring (43) around cylinder and direct hooked end into cylinder opening.

(10) Turn cylinder cover (41) until retaining ring (43) is completely returned to its internal position.

(11) Insert check valve ball (38) and check valve spring (40) in cylinder cover (41). Secure with pipe plug (39).

(12) Install pipe plug (23) and bleeder valve (37) in cylinder cover (41).

(13) Install O-ring (36) on needle valve (35). Install needle valve in cylinder cover. Advance needle valve until it bottoms. Back needle valve up one quarter turn from bottom position. Secure with jamnut (34).

(14) Install O-ring (7) on cylinder cover (5). Repeat (8), (9), (10), and (12) above for head end cylinder cover.

(15) Position head end pivot (2) on cylinder cover (5) and secure with capscrews (1).

(16) Position male adapter (24), piston rod packing (33), female adapter (32), shims (30 and 31), and wiper (29) in cover cylinder (41) and install snapring (28).

(17) Install bearings (27) in bearing block (26).

(18) Screw jamnut (25) on piston rod (45). Screw bearing block (26) on piston rod and tighten jamnut (25).

Note. The distance between the centers of of the bearing block eye and pivot eye should measure 35 3/8 inches when the piston is bottomed.

(19) Bottom piston against rod end cap of the door cylinder (11, fig. 7–9).

(10) Tie rope around head end of the cylinder.

(21) Raise elevator to working height.

(22) Raise door cylinder to operational position, and install head end hinge pin (1).

(23) Connect hydraulic hose to rod and head end of the door cylinder.

(24) Open doors to fully open position.

(25) Connect short link (18) and long link (19) with link pin.

(26) Aline piston rod knuckle with short link (18) hole, making sure piston is bottomed against rod end cap.

(27) Turn piston rod knuckle two and one-half turns counterclockwise.

(28) Remove link pin from short link (18) and long link (19).

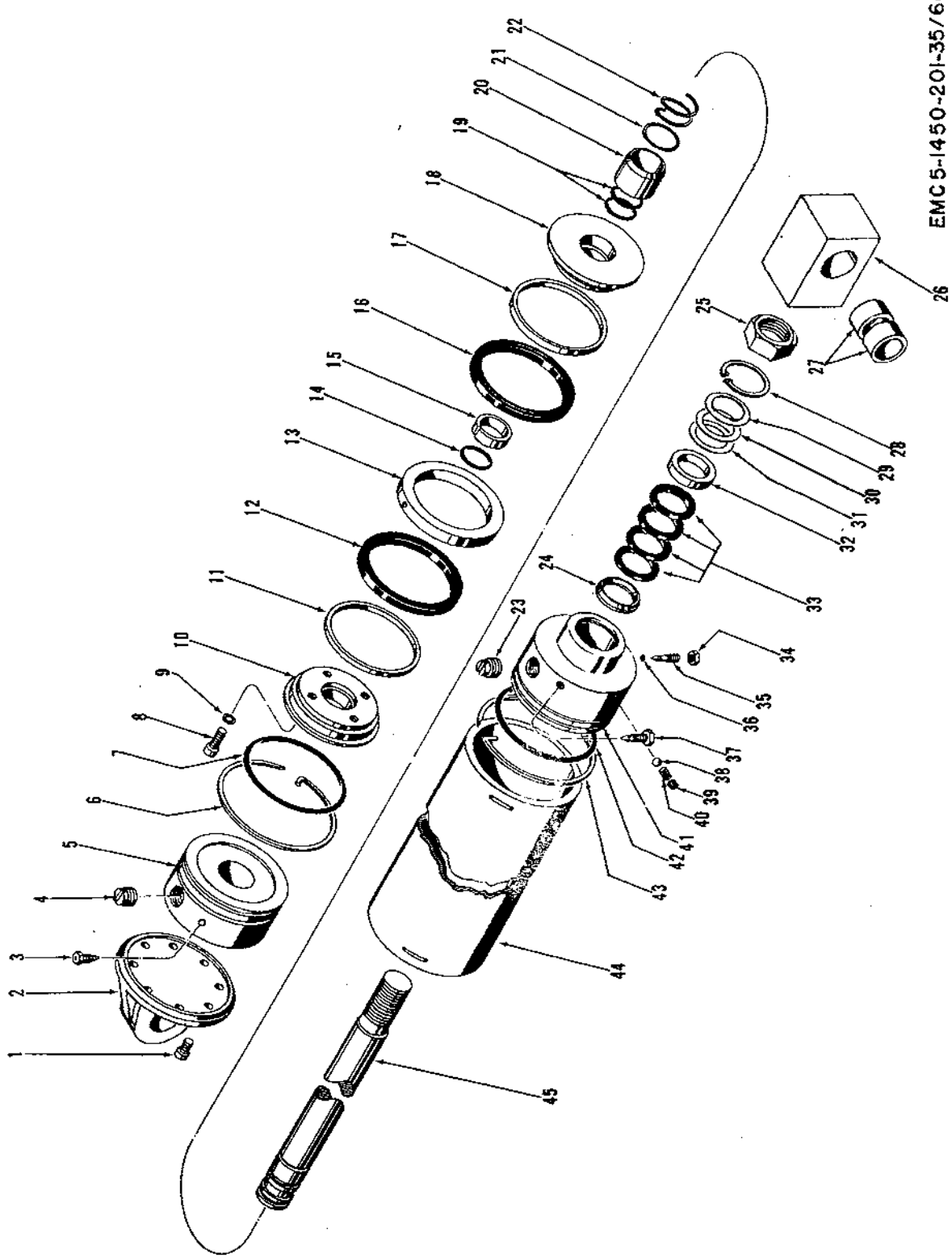

Figure 8-27. Door operating cylinder assembly, exploded view.

1 Capscrew
2 Head end pivot
3 Bleeder valve
4 Pipe plug
5 Head end cylinder cover
6 Retainer ring
7 Cylinder O-ring
8 Capscrew
9 Washer
10 Piston support
11 Piston packing ring
12 Piston packing
13 Piston
14 O-ring
15 Split ring
16 Piston packing
17 Piston packing ring
18 Piston support
19 O-ring
20 Rod end cushion
21 Cushion
22 Cushion spring
23 Pipe plug
24 Rod packing male adapter
25 Jamnut
26 Bearing block
27 Bearing
28 Snapring
29 Piston rod wiper
30 Shim
31 Shim
32 Rod packing female adapter
33 Piston rod packing
34 Jamnut
35 Cushion needle valve
36 O-ring
37 Bleeder valve
38 Check valve ball
39 Pipe plug
40 Check valve spring
41 Rod end cylinder cover
42 Cylinder O-ring
43 Retainer ring
44 Cylinder body
45 Piston rod

Figure 8-27—Continued.

(29) Install link pin through short link and piston rod knuckle and secure with cotter pins.

(30) Connect short link (18) and long link (19) with link pin and secure with cotter pins.

(31) Open shutoff valves (4, 5, fig. 3-26) and bleed cylinder.

(32) Test installation of door cylinders by door close operation (par. 2-10).

8-36. Doors Relief Valve

a. General. The doors relief valve (67, fig. 7-2) and (39, fig. 7-3) is used in power units NE-50009 and NE-50010 only. It is installed in the door operating hydraulic circuit to limit pressures in the door system to pressure required to operate the doors.

b. Removal and Disassembly.

(1) Close three gate valves (47, 70, fig. 7-2).

(2) Disconnect piping at union elbows (6, 111) and catch fluid in a clean container.

(3) Remove entire pipe assembly with relief valve (67) and S7 valve (58) attached.

(4) Unscrew nipple (8) from relief valve (67).

(5) Remove reducing bushing (66) and pipe (110) from relief valve.

Note. Leave remaining piping intact.

(6) Disassemble in accordance with paragraph 8-4*b*.

c. Cleaning, Inspection, and Repair. Clean, inspect, and repair in accordance with paragraph 8-4*c*.

d. Reassembly, Installation, and Adjustment.

(1) Reassemble in accordance with paragraph 8-4*d*.

(2) Install reducing bushing (66, fig. 7-2) and pipe (110) in relief valve (67).

(3) Install nipple (8) with attached S7 valve (58) and nipple (7), in relief valve.

(4) Install entire pipe assembly with relief valve (67) and S7 valve (58), in power unit. Connect union elbows (6, 111).

(5) *Adjustment.* The doors relief valve should be adjusted only if the doors do not meet the specified time requirements for closing. Before adjusting, determine that the following items have been correctly adjusted:

(*a*) Motor timing relays should provide 2 seconds delay between closing of starting contractors and closing of running contractors.

(*b*) Solenoid valve SA 1 should close smoothly without excessive delay, but not rapidly enough that it induces shock loading on the system.

(*c*) S7 valve should operate at maximum speed with maximum flow through the valve (all S7 valve adjustments turned counterclockwise as far as poossible.

(*d*) Door flow control valves should be set to allow maximum flow in the free flow direction (outer adjustment being set a minimum of three turns from fully closed position).

(*e*) The balancing valve on the lagging door must be wide open, and the balancing valve on the fast door throttled enough to allow doors to operate together.

(6) If adjustments (*a*) through (*e*) above are correct, the doors relief valve will require adjustment to bring about proper door closing speed. The door opening speed is adjusted at the flow control valves.

(7) The doors should be adjusted to close 8 seconds after the DOOR CLOSE button is depressed. Clockwise adjustment will increase the closing speed. Counterclockwise adjustment will decrease the closing speed.

8-37. Hydraulic Buffer-Type Pedestals

a. General. There are two hydraulic buffer-type pedestals in each installation. They are mounted at the center of the elevator platform in the pit section and are easily accessible to the operating personnel The buffer-type pedestals are squirt-can filled and should be inspected daily to be sure that the hydraulic fluid

does not leak out around the filler plugs or piston.

b. Buffer-Type Pedestal, Removal and Disassembly.

(1) Remove the buffer-type pedestals from the elevator pit section and drain the hydraulic fluid.

(2) Remove the two setscrews (2, fig. 8-28) and brass plugs (3) from cap.

(3) Position special wrench (2, fig. 8-29) on wrench flats (14) and remove cap (1) from piston rod. (7).

(4) Position special tool base (3) down over piston rod (7) and position special washer (4) on base (3), thread special tool handle (5) on piston rod (7), and turn until compression spring (11) is compressed enough and remove retaining ring (13).

(5) Loosen special tool handle (5) and remove the handle from piston rod (7).

(6) Remove special washer (4) and base (3) from piston rod (7).

(7) Remove the spring retainer (12) and compression spring (11) from piston rod (7).

(8) Remove base (21, fig. 8-28) from extension pipe (20).

(9) Remove cylinder (18) from extension pipe.

(10) Position cylinder (8, fig. 8-29) in special tool cylinder holder (10).

(11) Install the two setscrews (9) and secure the cylinder (8) to the special tool cylinder holder (10).

(12) Position wiper strip holder (6) over piston rod (7) making sure the wiper strip holder (6) is down against wiper strip (8, fig. 8-28).

(13) Remove packing nut (9), flange packing (10), cylinder cap (11), and O-ring (12) from cylinder (18).

(14) Remove O-ring (12), retaining ring (13), piston (14), and retaining ring (15) from piston rod (7).

(15) Remove cylinder liner (16) and O-ring (17) from cylinder (18).

c. Cleaning, Inspection, and Repair.

(1) Clean all parts with potable water and wipe dry with a clean lint-free cloth.

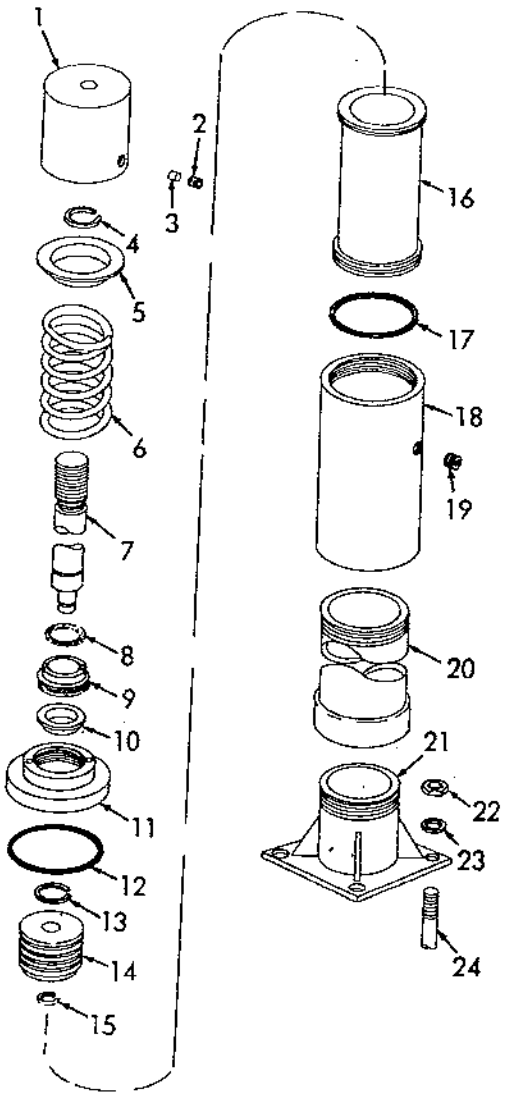

EMC 5-1450-200-35/51

1	Buffer cap	13	Retaining ring
2	Setscrew	14	Piston
3	Brass plug (2 rqr)	15	Retaining ring
4	Retaining ring	16	Cylinder liner
5	Spring retainer	17	O-ring
6	Compression spring	18	Cylinder
7	Piston rod	19	Pipe plug
8	Wiper strip	20	Extension pipe
9	Packing nut	21	Base
10	Flange packing	22	Nut (4 rqr)
11	Cylinder cap	23	Flat washer (4 rqr)
12	O-ring	24	Anchor bolt (4 rqr)

Figure 8-28. Buffer type hydraulic pedestal, exploded view.

(1, fig. 2-1). A locking dog retains the selector switch in that position.

(2) To raise the elevator, press the top button labeled UP (2). This starts the power unit and raises the elevator as described in *b*(3) above.

(3) To lower the elevator, press the second button labeled DOWN (3). This raises the elevator enough to clear the locking bars; descent occurs as described in *b* (4) above.

d. Console Operation. Details of console operation do not fall within the scope of this manual. However, to prepare the equipment for console operation, the following steps need to be taken:

(1) Turn on the main power switch lever (6, fig. 2-3) as described in *b* above.

(2) Move the rotary selector switch (7, fig. 2-2) on the master control station counterclockwise to the CONSOLE position. Check safety precautions and all preparation instructions above. The equipment is then ready for console operation.

2-11. Stopping

a. Master Control Station. Press the bottom button marked STOP (6, fig. 2-2) to halt all operation. This switch functions immediately regardless of selector switch position.

b. Elevator Control Station. Press the bottom button marked STOP (4, fig. 2-1) to stop all equipment action. This switch functions immediately regardless of selector switch position.

Note. If elevator fails to stop when STOP button is pressed, push UP and DOWN buttons simultaneously. Report condition to direct support maintenance.

c. Main Power Switch. The equipment may be stopped, if necessary, by moving the main power switch lever (6, fig. 2-3) to the OFF position, (fully clockwise).

d. Control Power Switch. If required, pull the lever on the control power switch (3, fig. 1-2) down. This removes actuating power from the relay coils and stops the equipment instantly.

Note. The equipment may be started and stopped as described in paragraphs 2-10 and 2-11. Although the basic purpose of the equipment is to move the elevator from the floor of the magazine to ground level, it may be stopped and restarted at any intermediate point by use of the same controls. The equipment, once started, carries out an entire operation automatically unless stopped by one of the methods described above.

2-12. Operation in Extreme Cold (Below 0°F.)

a. Ice and snow should not be permitted to accumulate on the equipment. Keep elevator doors closed and free from ice and snow. Open doors only when equipment is to be used.

Caution: **Do not use salt or salt solutions on the elevator door tops to melt snow or ice. Salt and salt solutions will cause rust formations on the doors and decrease the normal life expectancy of the rubber door seals.**

b. Hydraulic fluid is subject to freezing. If it is suspected that ice has accumulated in the bottom of the cylinder, notify general support maintenance.

2-13. Operation in Extreme Heat

No special instructions are applicable for the operation of the elevator under conditions of extreme heat.

2-14. Operation in Rain, High Humidity, and in Salt Water Areas

This special purpose elevator is designed to operate normally in most known environments, including rain, high humidity, and proximity to salt water. Drains are installed in the elevator doors and in the elevator platform. Doors should be closed during periods of precepitation except when operating the equipment.

Note: Dry all components with cloths or mops when the equipment is returned to storage position after use during rainy periods. If salt accumulations appear, remove them with clean, fresh water and wipe dry.

Warning: **Turn main power switch lever to OFF position before washing or cleaning any electrical components or cabinets.**

2-15. Operation in Dusty or Sandy Areas

When operating the equipment in dusty or sandy locations, check and clean the equalizer

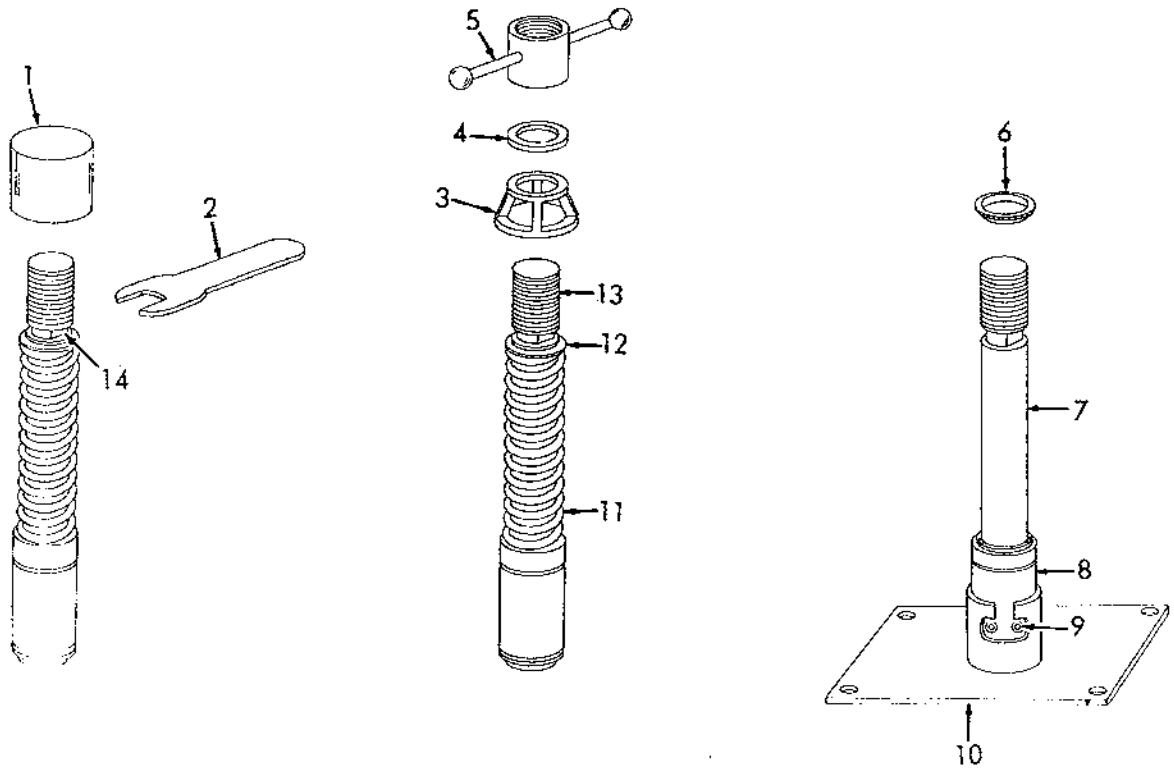

EMC 5-1450-200-35/52

1	Cap	6	Special wiper strip holder	11	Compression spring
2	Special wrench	7	Piston rod	12	Spring retainer
3	Special base	8	Cylinder	13	Retaining ring
4	Special washer	9	Screw (2 rqr)	14	Wrench flats
5	Special handle	10	Special cylinder holder		

Figure 8-29. Buffer pedestal special tools.

(2) Check the free length of the compression spring. It should measure 12 ± 1/8 inches. Replace the compression spring if the measurement indicates a free length of less than 11 7/8 inches. inches.

(3) Inspect all threaded parts for defective threads. Replace defective threaded parts.

(4) Inspect all parts for cracks, breaks, or bends. Replace all defective parts.

(5) Replace all O-rings, gaskets, and packing.

d. Reassembly and Installation.

(1) Position the cylinder (8, fig. 8-29) in the special tool cylinder holder (10) and secure with the two setscrews (9).

(2) Install O-ring (17, fig. 8-28) and cylinder liner (16) in cylinder (18).

(3) Install retaining ring (13) and piston (14) on piston rod (7) and secure with retaining ring (15).

(4) Install piston rod (7) in the cylinder liner (16).

(5) Install O-ring (12), cylinder cap (11), flange packing (10), and packing nut (9) over piston rod (7).

(6) Position the wiper strip (8) on the special tool wiper strip holder (6, fig. 8-29) and slide over the piston rod (7) into position.

(7) Secure cylinder cap (11, fig. 8–28), flange packing (10), and packing nut (9) to cylinder (18).

(8) Remove the wiper strip holder (6, fig. 8–29) from the cylinder rod (7).

(9) Position compression spring (6, fig. 8–28) and spring retainer (5) on piston rod (7).

(10) Install the special tool base (3, fig. 8–29), washer (4), and thread special tool handle (5) down on the piston rod (7) and install retaining ring (13).

(11) Remove the special tool handle (5), washer (4), and base (3) from piston rod (7).

(12) Install the two brass plugs (3, fig. 8–28) in buffer cap (1) and secure with setscrews (2).

(13) Remove special wrench (2, fig. 8–29) two setscrews (9), and cylinder holder (10).

(14) Install cylinder (18, fig. 8–28) on extension pipe (20).

(15) Install extension pipe (20) on base (21).

(16) Install the buffer-type pedestal in the pit section.

(17) Refill with hydraulic fluid.

CHAPTER 9

ELECTRICAL SYSTEM REPAIR INSTRUCTIONS

9-1. Description

a. General. The elevator electrical system is comprised of the following:

(1) Electric motors.
(2) Motor starters and timing relays.
(3) Limit switches and pressure switches.
(4) Control stations.
(5) Solenoids.

b. Electric Motors, Type B and C Installations. There are two electric motors referred to as motor number 1 and motor number 2. Both motors have nominal ratings of 30 hp, but due to internal construction (locked rotors) have short time capability to withstand overloads up to 39 hp and 45 hp respectively. Both motors are squirrel cage, induction type, with open drip proof frame and sealed ball bearings. Both motors are designed to operate from an ac 60 cycle, 416 volt, 3 phase, 3 wire source at 1700 rpm.

c. Electric Motors, Type D, B4 and B5 Installations. The motors used on the power units for these installations have nominal ratings of 45 hp and have an intermittent capability to withstand overloads up to 70 hp. Both motors are squirrel cage, induction type with open drip proof frame and sealed ball bearings. They operate from an ac 60 cycle, 416 volt, 3 phase, 3 wire source at about 1645 rpm at 70 hp.

Note. The No. 1 and No. 2 motors on the individual power units are identical except for the junction boxes. If sufficient room is available, and if length of conduit is also available, it makes no difference which side of the motor the junction box is on. The motors can be changed from No. 1 motor to No. 2 motor by removing end bells and switching the rotor to the other end, or vice versa, as required.

d. Motor Starters. Each motor is started by means of an autotransformer type controller on its 65 percent voltage tap. Vertical mechanical interlocks are provided between the starting and running contactors. Protection for the motors is provided by an adjustable duplex thermal overload relay providing inverse time limit overload protection.

e. Control Relays, Types B, B4, B5, C and D Installation. The third cabinet contains 10 control relays and 2 timing relays. The control relays are listed below with their specific function in an associated sequence and the number of normally open (NO), and normally closed (NC) contacts.

Relay	NO	NC	Function
1 CR	3	3	Door open
2	4	2	Doors closed
5	5	1	Elevator down (up)
4	2	2	Locking bar safety
5	5	1	Elevator down (up
6	1	3	Elevator down (down)
7	5	1	Up remote
8	3	3	Console safety
9	5	1	Down remote
10 CR	4	0	Door zone safety

f. Timing Relays. The pneumatic type timing relays are identified as 1 TR and 2 TR and consists essentially of a coil, diaphragm, and microswitch. Adjustment is provided from 0.3 seconds to 1 minute.

Note. All control relays and timing relays in this cabinet are actuated by 110 volt, 60 cycle ac current.

g. Limit Switches. All switches are snap action, two position, providing one open and one closed double break silver-to-silver contacts. The operating head is of the roller lever type which will trip the switch in either direction from a normal position. The roller may be secured in any position, 4° apart around the axis of the shaft. The operating head may be placed

in any one of four position 90° apart. All switches operate on 110 volt, 60 cycle current.

Type installation	No of switches	Switch Nos.
C & B Installations	18	1LS, 2LS, 5LS, 6LS, 9LS, 10LS, 11LS, 12LS, 13LS 14LS 15LS, 16LS, 17LS, 18LS, 19LS, 20LS, 21LS 22LS
B5 Installations	17	Same as C & B except LS21 is deleted.
B4 and D Installations.	21	Same as B3 except LS21 is deleted.

h. Pressure Switches. All pressure switche are rated for 110 volt, ac, 60 cycle curren

Type installation	Type power unit	No. of switches	Description
B & C	NE 5007	2	Number 1 pressure switch is factory set. Contacts open 75 psi and close at 85 psi. Contacts open when platform is supported by locking bars or pedestals. Contacts close when hydraulic pressure is applied or maintained on the main cylinder. Number 2 pressure switch is factory set. Contacts open at 90 psi and close at 40 psi. Contacts open when hydraulic pressure is applied or maintained on the main cylinder. Contacts close when the platform is supported by the locking bars or pedestals.
B & C	NE 50000	1	Normally open contacts MI-LI are set to close on increasing pressure at 70 psi and open on decreasing pressure at 50 psi. Normally closed contacts M2-L2 are set to open on increasing pressure at 70 psi and close on decreasing pressure at 50 psi.
B5 and D	NE50009 or NE 50010 NE 50012	2	IPS1 normally open set of contacts that close on increasing pressure of 70 psi. IPS2 normally closed set of contacts that is assocated with the firing circuit. 2 PSI normally closed set of contacts which open at a pressure of 70 psi. 2 PS2 normally closed set of contacts connected in series with the SA1 solenoid. Contacts open at a pressure of 70 psi.
B4	NE 50008	2	Number 1 switch operates exactly the same as switch on NE-50000 power unit. Contacts MI-LI and M2-L2 on pressure switch number two have an identical action and operate simultaneously. Contacts open on 70 psi and close on 50 psi.

i. Master Control Station. This station is a six element unit mounted on the left side of the forward wall in the magazine section. It has five pushbuttons labeled DOORS OPEN, DOORS CLOSED, ELEVATOR UP, ELEVATOR DOWN, and STOP. The sixth element is a three position selector switch labeled ELEVATOR MASTER and CONSOLE. The selector switch is provided with an automatic locking device which locks the selector switch whenever it is positioned in the ELEVATOR position. This prevents the elevator from being lowered while being loaded from the top position.

j. Elevator Control Station. This station i a three position unit mounted on the left sid forward end of the elevator platform. Th unit has three pushbuttons labeled UI DOWN, and STOP. Both the master and el vator stations are rated for 110 volts, 60 cycl ac current.

k. Two-Way Solenoid Valves, Type B and Installations (5007 Power Unit). The valv actuating solenoids on these types of installa tions are rated for intermittent operation onl at 110 volts, 60 cycle ac.

Valve	Function	Position
SB	Bypass valve number 1 pump	Normally open

Valve	Function	Position
SA 2	Bypass valve number 2 pump	Normally open
SA 1	Elevator safety	Normally open
S3	Leveling valve	Normally closed
S4	Lowering valve	Normally closed
S5	Door shutoff	Normally open
S6	Elevator shutoff	Normally closed

l. Two-Way Solenoid Valves, Types B and C Installations (Power Unit 50000), Type B4 (Power Unit 50008). The valve actuating solenoids on these types of installation are rated for continuous duty with 110 volt, 60 cycle, ac operation.

Valve	Function	Position
SA 1	Bypass valve number 1 pump	Normally open
SA 2	Bypass valve number 2 pump	Normally open
S 3	Leveling valve	Normally closed
S 4	Lowering valve	Normally closed
S 6	Elevator shutoff	Normally closed

m. Two-Way Solenoid Valves, Type B5 Installations (Power Units 50009, 50010, and 50012). Type B5 installations are essentially the same as the installations described above with the exception of an additional solenoid valve S7. S7 is a normally open, door circuit, bypass shutoff valve. The valve is open during the door sequence and closed during the elevator sequence.

n. Four-Way Solenoid Valves, All Types Installations. The valve actuating solenoids on the four-way valves are all rated for continuous duty with 110 volt ac operation. Following is a list of the four-way solenoids and their function.

Valve	Function
S1 A	Open doors
S1 B	Close doors
S2 A	Engage locking bars
S2 B	Retract locking bars

o. Power Distribution.

(1) There are two basic sources of electrical power to the Nike Installation the first and most commonly used source is commercial power from the Utility Companies. The second or emergency source of power is provided by 150 kw diesel generators located in the generator building. Both of these sources provide 416 volt, 3 phase, 60 cycle power to the magazine section of the installation. The power is fed to the magazine section through conduit, which enters the front wall just below ground level. The point of entry is an input box or main feeder. From the main feeder are taken two complete, independent, main circuits. One of these main circuits provides all the electrical power for the elevator assembly. This circuit is the elevator assembly circuit. The second main circuit in the magazine is used to provide power for the lighting and miscellaneous equipment. This circuit is the magazine circuit.

(2) *Elevator assembly circuit.* Within the elevator assembly circuit, there are two power requirements. The voltage necessary for motor operation is 416 volts, three-phase, 120 volts, single phase must be available for the operation of the protective and control systems of the motor control panels, and of the control cabinet. One lead of the 416 volts, three phase, to neutral produces 220 volts, single phase. This 220 volts is connected to the primary of a stepdown transformer which reduces the 220 volts to 120 volts, single phase.

(3) *Magazine circuit.* It is necessary to reduce the 416 volts, three phase furnished to the magazine circuit to both 208 volts, three phase, and 120 volts, single phase. The 208 volts, three phase, is available for any equipment which requires this voltage. The 120 volts, single phase is needed for the lights, the heater fan motors, and the wall receptacles. The 416 volts, three phase, is reduced to 208 volts, three phase, by the use of three single phase lighting transformers.

9-2. Autotransformer

***Warning:* Turn main power switch to OFF before testing.**

a. Testing.

(1) Remove nuts (1, fig. 9-1) and screws (2). Disconnect and tag six leads connected to autotransformer (3).

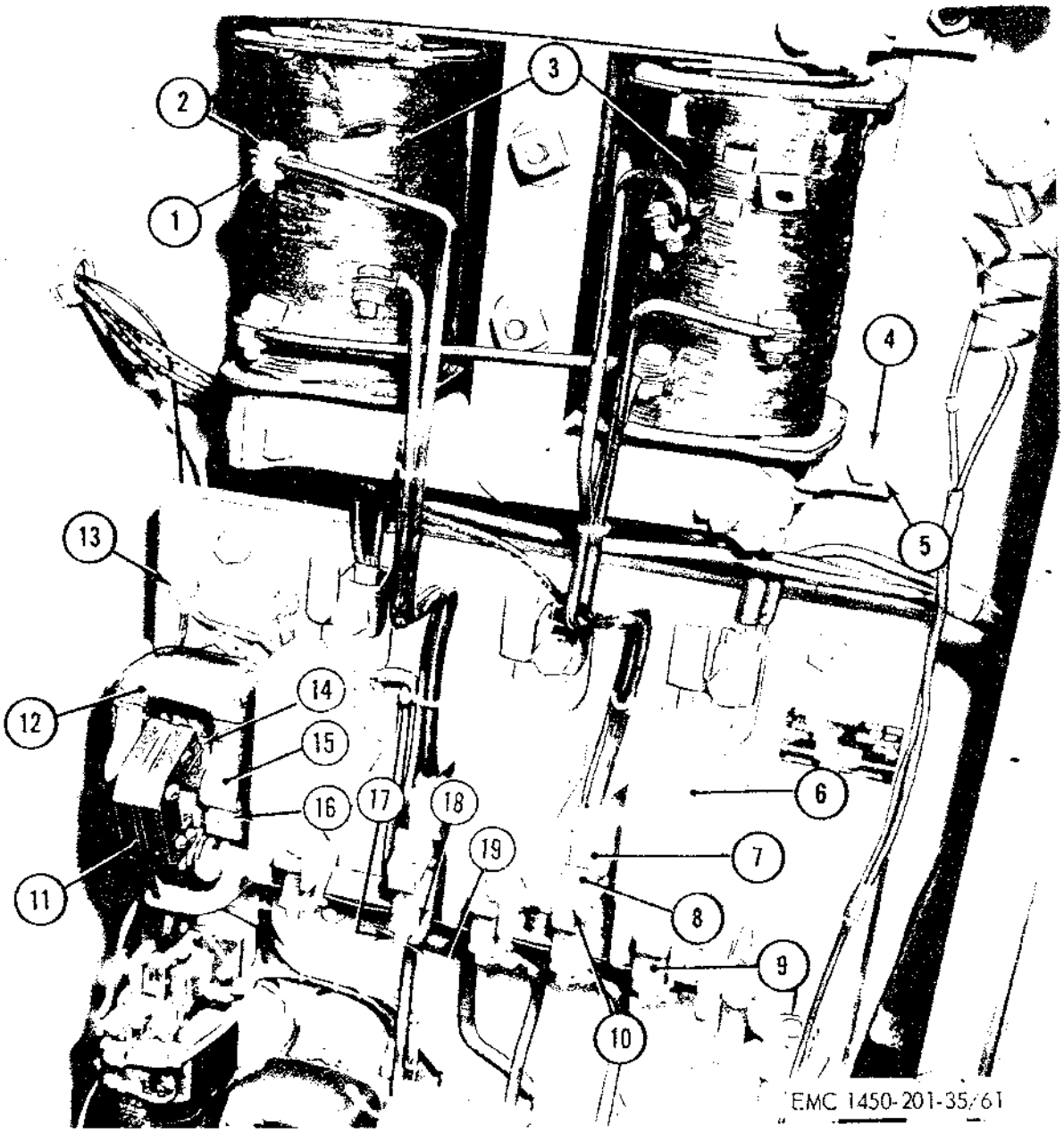

1 Nut
2 Screw
3 Autotransformer
4 Nut
5 Lockwasher
6 Arc shield
7 Stationary contact
8 Movable contact
9 Contact spring
10 Screw
11 Armature
12 Holding coil
13 Nut
14 Shading coil
15 Coil clamp
16 Screw
17 Spring retaining ring
18 Spring support
19 Pin

Figure 9-1. Motor starter and autotransformer components installed view.

(2) Check for continuity through each coil by touching the probes of an ohmmeter to all terminals on each coil. If either coil is open between any two terminals, replace autotransformer as an assembly.

b. Removal. Remove nuts (4) and lockwashers (5). Lift autotransformer (3) from cabinet.

c. Installation.

(1) Position autotransformer (3) in cabinet and secure with lockwashers (4) and nuts (5).

(2) Connect tagged leads to proper terminals, and secure with nuts (1) and screws (2).

9-3. Holding Coil

a. Testing.

(1) Disconnect coil leads from terminals just above holding coil (12, fig. 9-1) by removing nut (13).

(2) Check for continuity through coil with an ohmmeter. Replace coil if it is open.

b. Removal.

(1) Remove the cotter pin and wooden stop from stop assembly just behind armature lever (11).

(2) Remove screws (16) securing coil clamps (15) and remove clamps.

(3) Remove holding coil (12) by pulling outward and tilting upward.

c. Installation.

(1) Position holding coil (12) over frame Install coil clamps (15), and secure with screws (16).

(2) Install wooden stop and cotter pin in stop assembly just behind armature lever (11).

(3) Connect coil leads and secure with nuts (13).

9-4. Shading Coil

a. General. The shading coils (14, fig. 9-1) drop off. When they do, their absence is evidenced by a chattering noise.

b. Removal and Installation.

(1) *Removal.* Unsnap the hooked spring holding shading coil (14) to face of armature (11), and remove shading coil.

(2) *Installation.* Position shading coil (14) in groove on armature (11), and secure with hooked spring.

9-5. Contact Spring

a. Removal.

(1) Remove spring retaining ring (17, fig. 9-1) and pin (19) from spring support (18) at base of spring (9).

(2) Slide spring from spring support.

b. Installation.

(1) Position spring (9) in spring support (18).

(2) Secure spring by installing pin (19) and spring retaining ring (17) at base of spring support (18).

9-6. Thermal Overload Relay

Warning: **Turn main power switch OFF before testing.**

a. Testing.

(1) Test the overload relay assembly (4, fig. 9-2) for continuity and for function. Disconnect at terminal nuts (6), and check leads for continuity with an ohmmeter. Test for function by applying a current 10 percent in excess of indicated amperage rating on calibration plate (2). After 1 minute, a click will be heard, and continuity through terminals on the base of overload relay assembly will be completed. This indicates proper operation. Replace whole assembly if faulty.

(2) Press the reset button at calibration plate (2), repeat functional test.

(3) If the relay cannot be tripped and reset, replace the relay assembly.

b. Removal.

(1) Remove terminal nuts (6). Disconnect pressure terminals (5) and leads from terminal studs. Tag all leads and terminals.

(2) Remove screws (3) and lockwashers securing relay assembly (4) to cabinet. Remove relay assembly.

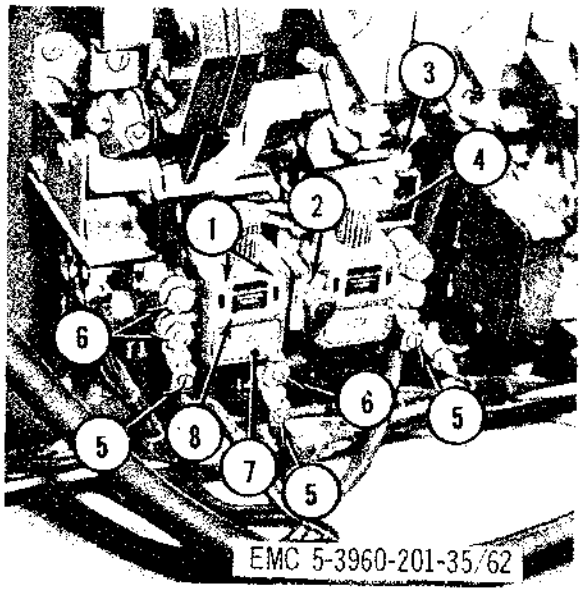

1 Cover screw
2 Calibration plate
3 Screw
4 Overload relay assembly
5 Pressure terminal
6 Nut
7 Cover
8 Indicating plate

Figure 9-2. Thermal overload relay assembly, installed view.

c. *Installation.*

(1) Position relay assembly (4) in cabinet, and secure with lockwashers and screws (3).

(2) Connect pressure terminals (5) and tagged leads to correct studs. Secure with terminal nuts (6).

9-7. Control Relays

a. *General.* All control relays located in the control relay and motor starter cabinets (4, 6, 7, fig. 7-15) are of similar construction, except for contact positions. The procedures in this paragraph apply to all control relays.

b. *Removal.*

Warning: **Turn main power switch OFF before disassembling or servicing control relays.**

(1) Remove and tag at terminals (2, fig. 9-3). Disconnect and tag leads connected to the relay at terminals (2).

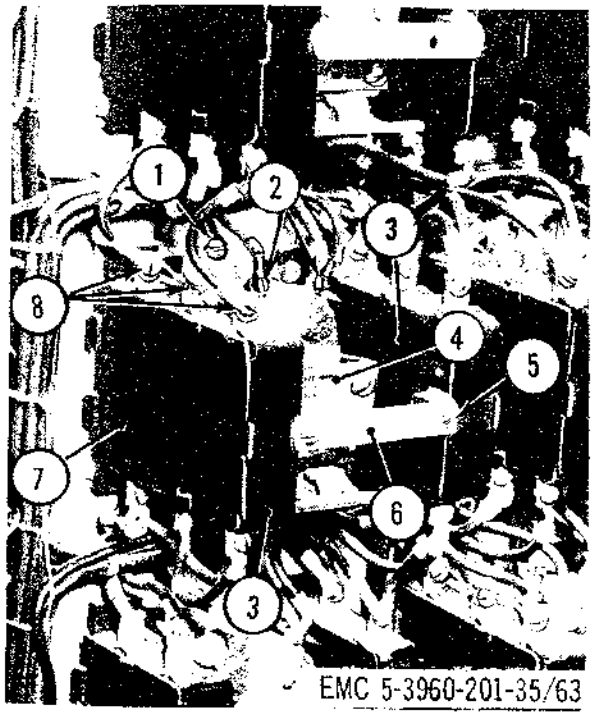

1 Mounting screw
2 Coil terminals
3 Case and contact assembly
4 Armature assembly
5 Screw
6 Contact support bar
7 Insulating cover
8 Contact terminals

Figure 9-3. Control relay, installed view.

(2) Remove mounting screws (1) holding relay in cabinet. Lift relay up and out.

c. *Testing.*

(1) Apply 115 volts ac to relay coil terminals (2), and check action of the relay contacts with an ohmmeter. Check continuity between terminals (8) and terminals at the opposite end. The armature assembly (4) should move freely. Normally open contacts should close, and normally closed contacts should open, when the relay is energized.

(2) If the relay fails to operate properly, disassemble and repair as required.

Disassembly.

(1) Remove screws (5) securing contact support bar (6) to case and contact assemblies (3).

(2) Pull down pivot yoke (8, fig. 9-4) and lift armature (13) from relay.

(3) Straighten coil clamp (11), ends, and side coil (12) from magnet core (17).

(4) Remove screws (18) holding case and contact assemblies (7) and remove.

(5) Pull hinge pin (9) from magnet core (17) to release support (16) and pivot yoke (8).

Note. Before separating support and pivot yoke, note part relationship for correct reassembly.

(6) Separate support (16) and pivot yoke (8), and remove spring (10).

(7) Remove screws (14) and lockwashers (15) holding magnet core (17), and coil clamps (11) to base plate (6).

(8) Remove insulating cover (1), and slip contact bar (19) from molded case (5). Remove movable contact (22) from contact bar. Remove spring plate (20) and spring (21).

(9) Remove screws (2) and lockwashers (3) to separate stationary contact (4) from molded case (5).

(10) To disassemble second case and contact assembly (7), repeat (8) and (9) above.

e. Cleaning, Inspection, and Repair.

(1) Clean contacts with a clear denatured alcohol. Wipe all parts with a clean dry cloth.

Caution: **Do not clean coil with alcohol. Do not use abrasives to clean contacts.**

(2) Inspect all parts for distortion, excessive wear, cracks, misalinement, and other damage or defects.

(3) Replace defective part as necessary.

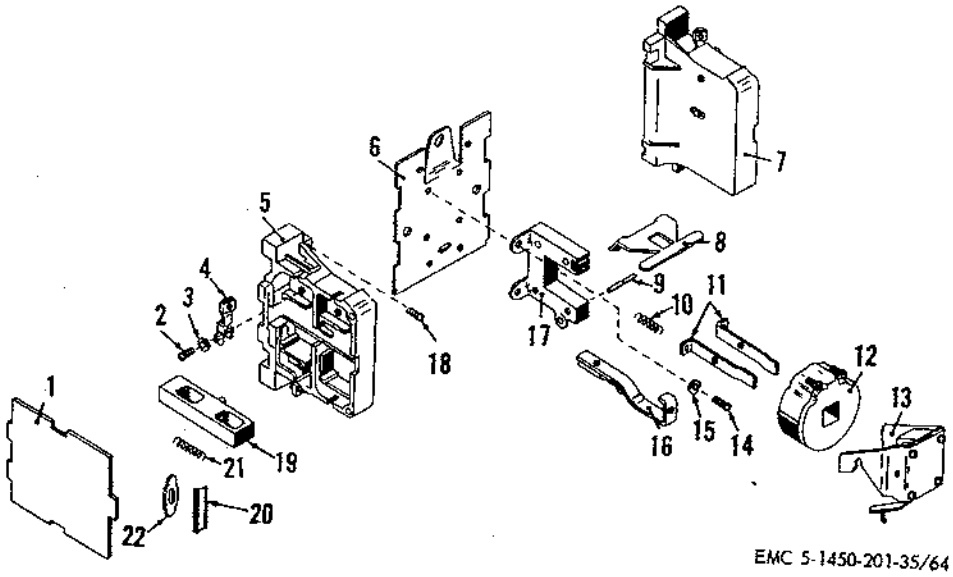

1 Insulating cover
2 Screw
3 Lockwasher
4 Stationary contact
5 Moulded case
6 Base plate
7 Case and contact assembly
8 Pivot yoke
9 Pin
10 Spring
11 Coil clamp
12 Coil
13 Armature assembly
14 Screw
15 Lockwasher
16 Support
17 Magnet core
18 Screw
19 Contact bar
20 Spring plate
21 Contact spring
22 Movable contact

Figure 9-4. Control relay, exploded view.

cables and pulleys to remove dust and sand accumulations. Wipe the guide rails clean of encrusted lubricants. Service the oil bath filter weekly. (Refer to current lubrication order.)

2-16. Operation at High Altitudes

No special procedures or precautions need be observed for operation of the elevator at high altitudes.

Section IV. OPERATION OF AUXILIARY MATERIAL USED IN CONJUNCTION WITH THE ELEVATOR

2-17. Fire Extinguisher (Monobromotrifluoromethane Type)

a. Description. The monobromotrifluoromethane type fire extinguisher is generally suitable for all types of fire, except fires involved with LOX (liquid oxygen) generating equipment. The fire extinguisher is furnished with a disposable-type cylinder.

b. Operation. To operate the fire extinguisher, perform the following:

(1) Remove the extinguisher from its location.

(2) Break the seal by pulling the safety pin from the handle.

(3) Point horn at base of the flame.

(4) Press trigger for discharge and direct stream at the base of the flame.

(5) Replace the cylinder immediately after using.

c. Replacement of Cylinder. To replace the cylinder, perform the following:

(1) Press the lever to release the pressure from the used cylinder.

(2) Loosen the swivel valve coupling nut and remove valve assembly from the used cylinder.

(3) Remove instruction band from used cylinder.

(4) Place a new cylinder through the instruction band.

(5) Replace safety pin in the valve and seal pin with sealing wire.

(6) Attach valve assembly and tighten swivel coupling nut on the new cylinder and place fire extinguisher in mounting bracket.

(7) Adjust instruction band on cylinder to show maintenance and operating instructions.

d. Maintenance. Weigh fire extinguisher every three months and replace cylinder if gross weight has decreased 4 ounces or more Lubricate cylinder neck threads with 1 drop of OE oil before reassembly.

f. Reassembly.

(1) Place stationary contact (4, fig. 9-4) in molded case (5), and secure with screws (2) and lockwashers (3).

(2) Install spring plate (20) spring (21), and movable contact (22) in contact bar (19). Fit contact bar into molded case (5). Install insulating cover (1).

(3) Install magnet core (17) and coil clamps (11) on base plate (6) with lockwashers (15) and screws (14).

(4) Engage support (16) and pivot yoke (8) as noted during disassembly, and install spring (10).

(5) Place support (16) under magnet core (17), and install hinge pin (9).

(6) Secure case and contact assembly (7) to base plate (6) with screws (18).

(7) Slide coil (12) over magnet core (17) and secure by bending ends of coil clamp (11) out against sides of coil.

(8) Fit armature assembly (13) on pivot yoke (8).

(9) Install contact support bar (6, fig. 7-4) on case and contact assemblies (3) with lockwashers and capscrews (5).

g. Installation.

(1) Install relay in cabinet and secure with screws (1).

(2) Connect tagged leads to terminals (8) and to coil terminals (2).

9-8. Timing Relays

a. General. All timing relays in the control relay and motor starter cabinets (4, 6, 7, fig. 7-15) are identical in construction. The procedures in this section apply to all timing relays.

Warning: **Turn main power switch OFF before disassembling or servicing timing relays.**

b. Removal.

(1) Remove terminal screws (2, 4, fig. 9-5). Disconnect and tag all leads from timing relay (1).

(2) Remove screws (7), and lift relay from cabinet.

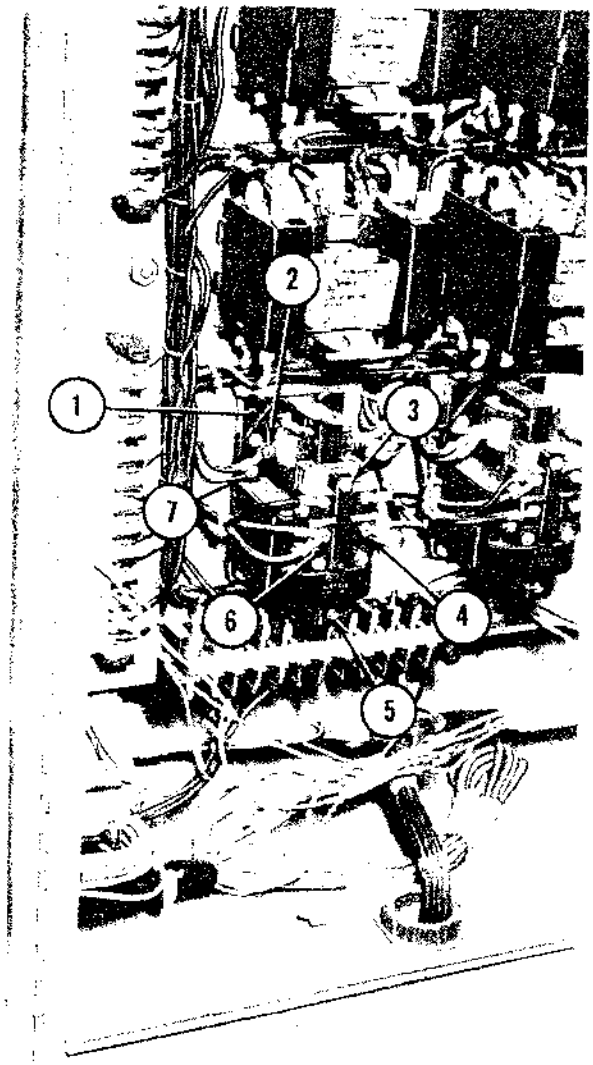

EMC 5-3960-201-35/65

1 Timing relay
2 Screw
3 Screw
4 Screw
5 Adjusting screw
6 Microswitch
7 Screw

Figure 9-5. Timing relay, installed view.

c. Disassembly.

(1) Remove adjusting screw (4, fig. 9-6) and remove friction spring (5) from cover (3).

(2) Remove screws (1) and lockwashers (2), securing cover to base (34). Remove cover.

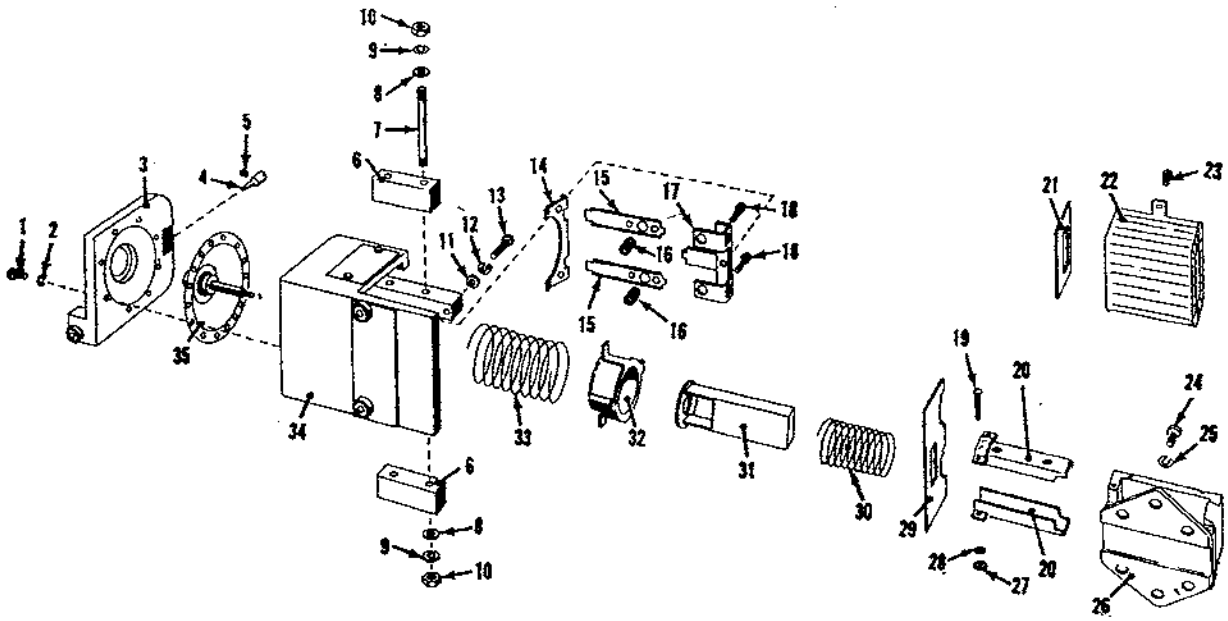

1	Screw	13	Screw	25	Lockwasher
2	Lockwasher	14	Lever	26	Magnet frame
3	Cover	14	Lever	27	Nut
5	Timing adjusting screw	16	Spring	28	Lockwasher
5	Friction spring	17	Bracket	29	Insulator
6	Microswitch	18	Screw	30	Plunger spring
7	Microswitch mounting stud	19	Screw	31	Plunger
8	Flat washer	20	Plunger guide	32	Spring cup
9	Lockwasher	21	Spring	33	Main spring
10	Nut	22	Coil	34	Base
11	Flat washer	23	Terminal screw	35	Valve and diaphraph assembly
12	Lockwasher	24	Screw		

Figure 9-6. Timing relay, exploded view.

(3) Unscrew diaphragm assembly (35) from spring cup (32).

(4) Remove nuts (10), lockwasher (9), washer (8), and stud (7), securing microswitch (6) to base (34) and remove microswitch.

(5) Remove screw (13), lockwasher (12), and flat washer (11), attaching bracket (17) to base (34).

(6) Remove screw (18) and separate spring (16) and lever (15).

(7) Remove screw (19), nut (27), and lockwasher (28), attaching plunger guide (20) to base (34).

(8) Remove screw (24) and lockwasher (25) securing magnet frame (26) to base (34). Separate coil (22), magnet frame (26), insulator (29), and spring (21) from base.

(9) Separate plunger guides (20) from coil (22). Remove coil and spring (21) from magnet frame (26).

(10) Lift plunger (31) and plunger spring (30) from base (34).

(11) Remove lever (14), spring cup (32), and main spring (33) from base.

(12) Remove screw (23) from coil (22).

d. Cleaning, Inspection, and Repair.

(1) Clean all parts except coil, microswitch, and diaphragm, with pure denatured alcohol.

(2) Clean coil, microswitch, and diaphragm with carbon tetrachloride and a clean, dry cloth.

Note. Do not use any lubricants on any parts of this assembly.

(3) Inspect all parts for distortion, excessive wear, and other defects or damage. Inspect coil for defects to the insulation and for signs of overheating (discoloration).

(4) Replace all defective parts as necessary.

e. Testing.

(1) Test the coil for continuity with an ohmmeter, touching the probes to the coil terminals. Meter should indicate continuity. Replace coil if it is open.

(2) Test the microswitch with an ohmmeter, touching one probe to the common terminal and the other to the normally closed terminal. The ohmmeter should indicate continuity.

(*a*) Move probe from the normally closed terminal to the normally open terminal. The ohmmeter should indicate no continuity.

(*b*) Maintain probe in this position and actuate switch. The ohmmeter should now indicate continuity.

(*c*) With switch actuated, move probe to normally closed terminal. The ohmmeter should indicate no continuity.

(3) Replace microswitch, if it does not conform to this test.

f. Reassembly.

(1) Position main spring (33), lever (14), and spring cup (32) in base (34).

(2) Screw diaphragm assembly (35) into spring cup (32).

(3) Position cover (3) on base (34), and secure with lockwashers (2) and screws (1).

(4) Install friction spring (5) and adjusting screws (4) in cover.

(5) Install plunger (31) in spring cup (32), and place plunger spring (30) on plunger.

(6) Install screw (23) in coil (22).

(7) Position coil (22) and spring (21) on magnet frame (26). Insert plunger guides (20) into coil.

(8) Secure magnet frame (26) to base (34) with lockwashers (25) and screws (24). Position insulator (29) on base (34).

(9) Attach plunger guides (20) to base with screws (19), lockwashers (28), and nuts (27).

(10) Insert levers (15) in slots of bracket (17). Position springs (16) between levers (15) and bracket (17). Secure bracket with screws (18).

(11) Place assembled bracket in position on base (34) making sure levers (15) engage slots in lever (14). Secure with washer (11), lockwasher (12), and screw (13).

(12) Install microswitch (6) on base, and secure with stud (7), washers (8), lockwashers (9), and nuts (10).

g. Installation.

(1) Position timing relay (1, fig. 9-5) in cabinet, and secure with screws (7).

(2) Connect tagged leads to proper terminals, and secure with terminal screws (2, 4).

9-9. Master Control Station

a. General. A master control station is included in the electrical system. It provides for control of the elevator system by pressing buttons on either the master control station itself or on the elevator control station. A rotary selector switch on the master control station selects either the elevator control station or the master control station at the controlling point.

Warning: **Turn main power switch OFF before disassembling or servicing the master control station.**

b. Removal. Remove master control station according to paragraph 7-110.

c. Disassembly.

(1) Remove screws (16, fig. 7-17) and washers (17) holding cover (8) to station body (1). Remove cover (8) and rubber gasket (2).

(2) Loosen setscrew (11) in selector switch handle (12).

(3) Lift handle locking arm (9) to unlock selector switch handle (12). Remove handle and spacers (10) from T-shaft (19).

(4) Remove cotter pin (13) from pivot post (15). Slife off pivot spacers (14) and handle locking arm (9) from pivot post.

(5) Remove T-shaft (19) from T-shaft spring (18).

(6) Remove screws (22) and lockwashers (21), releasing rotary selector switch from control station body (1).

(7) Remove mounting screws (7), lockwashers (6), and washers (5) to free switch assembly (3) and switch retainer (4) from station body (1).

(8) See paragraph 9-11 for disassembling pushbutton and switch assembly (3).

d. Cleaning, Inspection, and Repair.

(1) Clean all contacts with pure denatured alcohol.

(2) Remove dust and foreign matter from station body and cover.

(3) Inspect all parts for distortion, excessive wear, cracks, weakness, thread damage, and misalinement.

(4) Replace all damaged or defective parts as necessary.

e. Testing.

(1) Turn rotary selector switch (20, fig. 7-17) to extreme clockwise position. Check with an ohmmeter for continuity between terminals 21, 26, and 28. Replace switch if circuits are open.

(2) Turn rotary selector switch to extreme counterclockwise position. Check for continuity between terminals 11 and 17, and between terminals 11 and 17A. Replace switch if circuits are open.

(3) Turn rotary selector switch to center position. Check continuity between terminals 11 and 15. Check continuity between terminals 21, 22, 25, and 28. Replace switch if circuits are open.

(4) Check pushbutton switch assemblies (3) with an ohmmeter. The set of contacts farthest from the plunger should be normally closed. Replace entire switch if continuity is faulty, or if normally open or normally closed situations do not reverse when plunger is depressed.

f. Reassembly.

(1) See paragraph 9-11 for reassembly of pushbutton and switch assembly (3).

(2) Position switch assembly (3) and switch retainer (4) in control station body (1). Secure with washers (5), lockwashers (6), and mounting screws (7).

(3) Position rotary selector switch (20) in station body (1), and secure with lockwasher (21) and screws (22).

(4) Position T-shaft spring (18) on T-shaft (19). Install T-shaft in cover (8).

(5) Position spacers (10) and selector switch handle (12) on T-shaft (19). Secure with setscrew (11).

(6) Position spacers (14) and selector switch locking arm (9) on pivot post (15). Secure with cotter pin (13).

(7) Position gasket (2) on station body (1), and attach cover with screws (16) and lockwashers (17).

g. Installation. Install master control station in accordance with paragraph 7-110.

9-10. Elevator Control Station

a. General. A control station having three pushbuttons is installed on the elevator of this system. Its purpose is to provide control of the elevator only, when the master control station rotary selector switch is in ELEVATOR position.

Warning: **Turn the main power switch OFF before disassembling or servicing the elevator control station.**

b. Removal. Remove elevator control station in accordance with paragraph 7-111*a*.

c. Disassembly.

(1) Remove screws (7, fig. 7-18) and washers (8) which hold cover (6) to station body (1). Remove cover (6) and rubber gasket (2).

(2) Remove mounting screws (5), lockwashers (4), and washer (3) to free switch assembly (10) and switch retainer (9) from station body (1).

(3) See paragraph 9-11*b* for disassembly of pushbutton and switch assembly (10).

d. Cleaning, Inspection, and Repair. Clean and inspect all parts in accordance with paragraph 9-9. Replace worn or defective parts.

e. Testing. Test pushbutton in accordance with paragraph 9-*9d*.

f. Reassembly.

(1) See paragraph 9-11*d* for reassembly of pushbutton and switch assembly (10, fig. 7-18).

(2) Position switch assembly (10) and switch retainer (9) in station body (1). Secure with washers (3), lockwashers (4), and mounting screws (5).

(3) Position rubber gasket (2) and cover (6) on stationbbody (1). Attach with washers (8) and screws (7).

g. Installation. Install elevator control station in accordance with paragraph 7-11*b*.

9-11. Typical Pushbutton, Master Control Station and Elevator Control Station

a. General. Pushbutton assemblies for both master control and elevator control stations are identical. They are used to control movement or stopping of the elevator and operation of the doors.

Warning: **Turn main power switch OFF before disassembling or servicing control station components.**

b. Removal.

(1) Remove master control station switch assembly (3, fig. 7-17) in accordance with paragraph 9-*9b*.

(2) Remove switch assembly (10, fig. 7-18) in accordance with paragraph 9-10*b*.

c. Disassembly.

(1) Compress and remove movable contact (14, fig. 9-7) and spring (15) from plunger (6). Remove spring (15) from between movable contacts.

(2) Remove assembled contacts (5) from plunger (6).

(3) Slide plunger (6) from base (2), and remove spring (16) from base.

(4) Remove screws (1, 4) and lockwashers, securing stationary contacts (3, 17) to base (2). Remove contacts from base.

(5) Remove screws (12). Pull cover plate (11) with attached pushbutton (13), retainer ring (1), and pushbutton plunger (9) from cover (7). Unscrew pushbutton plunger from pushbutton, and remove retainer ring.

(6) Pull bushing (8) from mounting hole in cover (7).

d. Cleaning, Inspection, and Repair. Refer to paragraph 9-9*c*.

e. Reassembly.

(1) Place stationary contacts (3 and 17, fig. 9-7) in base (2), and fasten with screws (1, 4).

(2) Position spring (16) in base (2), and position plunger (6) on top of spring.

(3) Place contact spring (15) between contacts (14), and insert contacts in mounting slot on plunger (6).

(4) Position contacts (5) in slot on plunger (6).

(5) Insert bushing (8) in mounting hole in cover (7).

(6) Position cover plate (11) on cover (7), and fasten with screws (12).

(7) Insert pushbutton (13) in cover plate (11). Place retainer ring (10) on end of pushbutton, and secure by installing plunger (9) in threaded end of pushbutton.

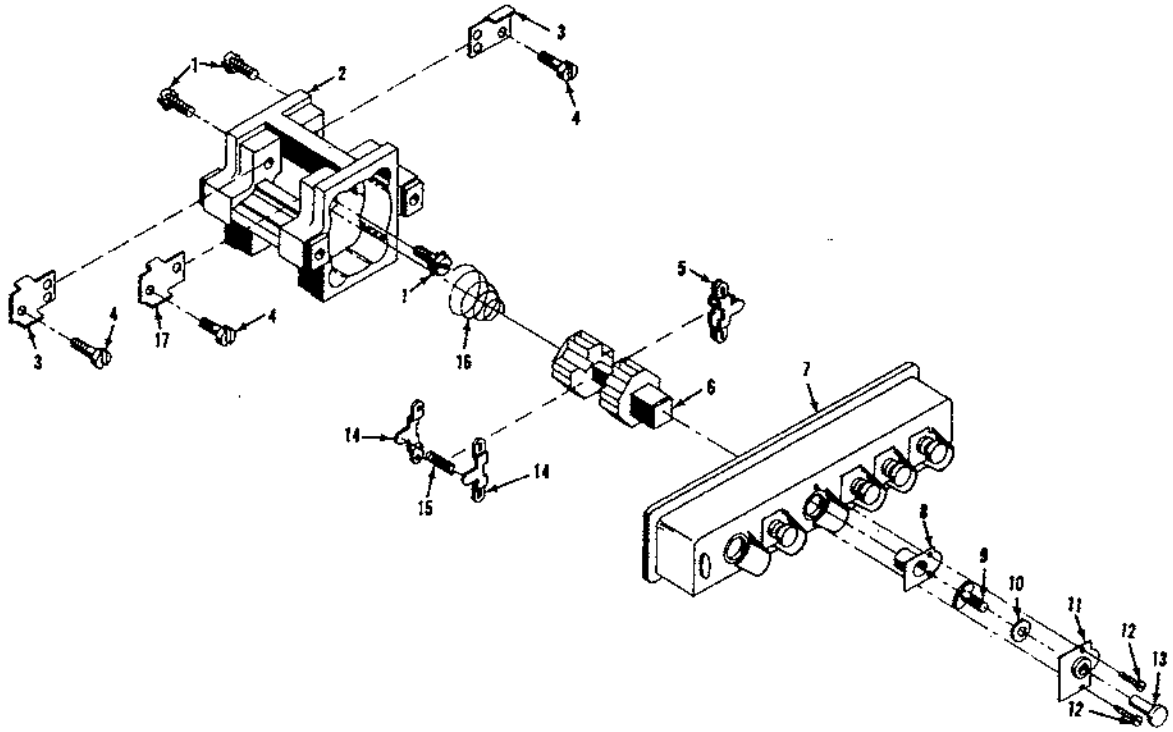

1	Screw	7	Master control station cover	13	Pushbutton
2	Base	8	Bushing	14	Movable contact
3	Lower stationary contact	9	Pushbutton plunger	15	Movable contact spring
4	Contact screw	10	Retainer ring	16	Plunger spring
5	Movable contacts (assembled)	11	Cover plate	17	Upper stationary contact
6	Plunger	12	Screw		

Figure 9-7. Master control station and pushbutton parts, exploded view.

f. Installation.

(1) Install master control station switch assembly in accordance with paragraph 9-9*d*.

(2) Install elevator control switch assembly in accordance with paragraph 9-10*d*.

9-12. Limit Switches

a. General. The limit switches used throughout the evelator are identical in construction. The procedure in this paragraph applies to all limit switches.

Warning: **Turn main power switch OFF before disassembling or servicing this equipment.**

b. Removal. Remove limit switch in accordance with paragraph 7-112.

c. Disassembly.

(1) Remove screws (33, fig. 9-9) to release switch cover (32) and gasket (31) from case (5).

(2) Remove screws (30), lockwashers (29), washers (38), and bushings (27) which attach stationary contact base (24) to case (5).

(3) Remove screws (23 and 26) attaching stationary contacts (25) to base (24).

(4) Lift movable contact base (1) from case (5).

(5) Remove movable contacts (2) from base (1). To do this, twist contacts

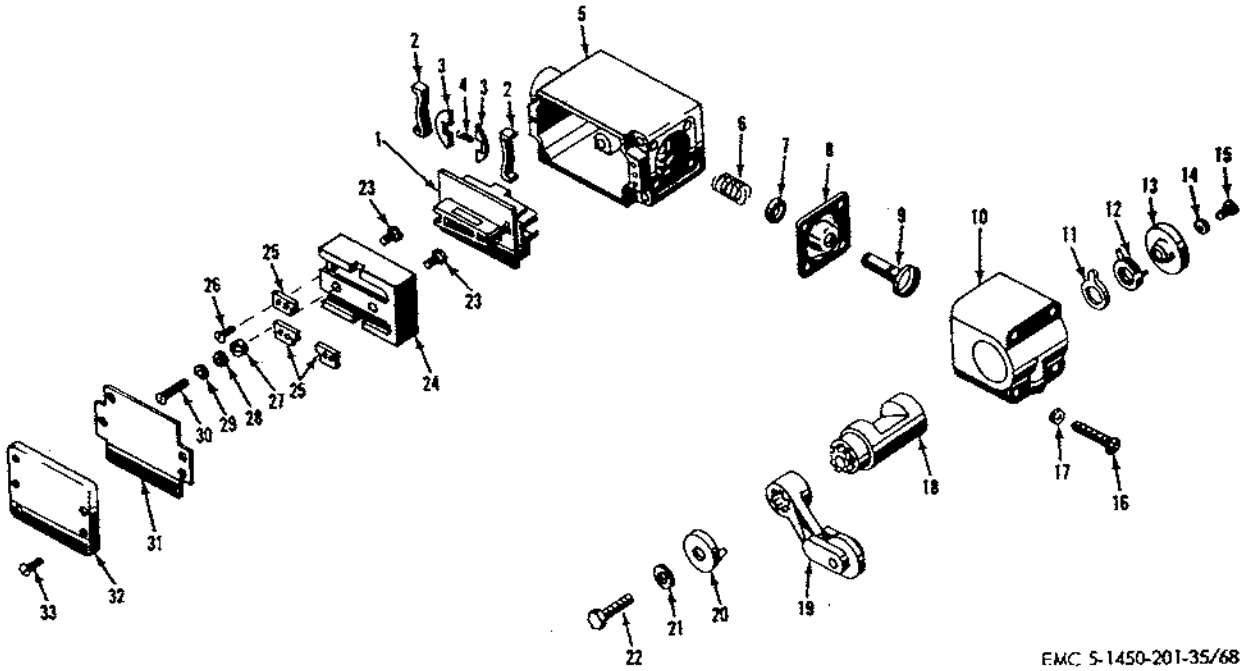

1	Movable contact base	12	Spring	23	Screw
2	Movable contacts	13	Disc	24	Stationary contact base
3	Contact carrier	14	Lockwasher	25	Stationary contact
4	Contact carrier spring	15	Screw	26	Screw
5	Case	16	Screw	27	Fibre bushing
6	Spring	17	Lockwasher	28	Flat washer
7	Spring seat	18	Operating shaft	29	Lockwasher
8	Gasket	19	Roller lever assembly	30	Screw
9	Plunger	20	Keypin washer	31	Cover gasket
10	Operating head	21	Lockwasher	32	Cover
11	Stop	22	Screw	33	Screw

Figure 9-8. Limit switch, exploded view.

one-quarter turn, and pull out contacts, contact carriers (3), and contact carrier spring (4).

(6) Remove operating head (10) from case (5) by removing screws (16) and lockwashers (17).

(7) Disengage spring (6) from groove in bottom of plunger (9) and remove spring.

(8) Remove spring seat (7) and gasket (8) from plunger (9).

(9) Mark position of keypin washer (20) and roller lever (19) in relation to shaft (18), so that they may be reassembled correctly.

(10) Remove screw (22), lockwasher (21), and keypin washer (20), and remove roller lever assembly (19) from shaft (18).

(11) Remove screw (15), lockwasher (14), disc (13), spring (12), and stop (11) from shaft (18).

(12) Remove shaft (18) from operating head (10) noting the position of the cutout in the shaft in relation to the plunger (9).

d. Cleaning, Inspection, and Repair. Clean, inspect, and repair in accordance with paragraph 9-9*c*.

e. Reassembly.

(1) Position shaft (18) in operating head (10) being certain to position the cutout correctly.

(2) Install stop (11), spring (12), disc (13), lockwasher (14), and screw (15) on shaft (18).

Note. The stop and spring fit inside the operating head and the disc. Lockwasher and screw fit from the outside.

(3) Line up roller lever assembly (19) and shaft (18), and install roller lever on shaft.

(4) Install keypin washer (20) by inserting pin where lever and drive flutes line up as marked.

(5) Secure roller lever and keypin washer to shaft with lockwasher (21) and screw (22).

(6) Slide gasket (8) and spring seat (7) on plunger (9). Install spring (6) on plunger, and engage spring with groove in end of plunger. Install plunger in case (5).

(7) Install assembled operating head on case (5), and secure with lockwashers (17) and screws (16).

(8) Place contacts (2) in contact base (1), and place contact carrier (3) on each contact. Fit spring (4) between carriers, and install base (1) in case (5).

(9) Install stationary contacts (25) in stationary contact base (24), and secure with screws (23, 26).

(10) Position stationary contact base (24) on movable contact base (1). Secure with bushings (27), washers (28), lockwashers (29), and screws (30).

(11) Install gasket (31) and cover (32). Secure with screws (33).

f. Installation. Install limit switch in accordance with paragraph 7-112*b*.

9-13. Pressure Switches

a. General. Pressure switches serve as interlocks between the hydraulic and electrical systems. Typically they prevent missile firing when any pressure is present in the hydraulic system; they prevent door operation when the elevator is not on the pedestals; and they deenergize the leveling valve when the elevator comes to rest on the locking bars or on the pedestals.

b. Adjustment and Testing.

(1) *Number 1 pressure switch* (60, fig. 7-1). All power units except NE-5007. Interlocks with missile firing system, and deenergizes leveling valve.

(*a*) Remove tubing (95, fig. 7-1) at connector (92).

(*b*) Remove cover so that contacts can be observed.

(*c*) Connect a low pressure air supply and a 0-100 psi pressure gage to the switch.

(*d*) Apply pressure to the switch, observing when the contacts operate. The switch should operate on an increasing pressure at 70 psi plus or minus 20 psi. It should return to normal contact position on a decreasing pressure of 50 plus or minus 20 psi.

Contacts	Operation
M1 and L1	Close in increasing pressure at 70 psi; Open on decreasing pressure at 50 psi
M2 and L2	Open on increasing pressure at 70 psi; Close on decreasing pressure at 50 psi

Note. Adjustment of pressure setting will determine when switch will operate on increasing pressure. Adjustment of the differential setting will determine at which point the switch will return to normal contact position on decreasing pressure.

(*e*) Remove air line and pressure gage. Reconnect the hydraulic tubing and install cover.

(2) *Number 2 pressure switch,* (93, fig. 7-1). Power units NE-50008, NE-50009, NE-50010, and 50012. Interlocks with door circuit. Procedure is identical to (1)(*a*), (*b*), (*c*), and (*d*) above for number 1 pressure switch.

Contacts	Operation
M1 and L1 M2 and L2	Both sets of contacts close on increasing pressure at 70 psi and open on decreasing pressure at 50 psi.

(3) *Number 1 pressure switch (13, fig. 9-9).* Power unit NE-5007 only. Deenergizes leveling valve.

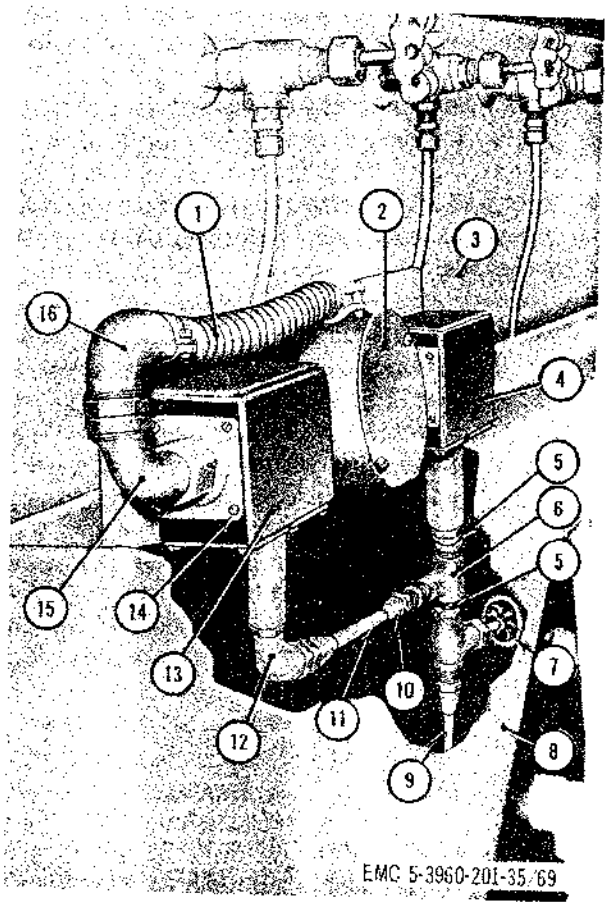

1 Flexible conduit
2 Junction box
3 Reservoir
4 Pressure switch number 2
5 Nipple
6 Pipe tee
7 Shutoff valve
8 Frame
9 Tubing
10 Connector
11 Tubing
12 Tubing elbow
13 Pressure switch number 1
14 Screw
15 Conduit elbow
16 Flexible conduit connector

Figure 9-9. Pressure switches, power unit NE-5007.

(*a*) Remove tubing (11) at connector (10).

(*b*) Remove cover to observe contacts.

(c) Connect a low pressure air supply and a 0.100 psi gage to the switch at elbow (12) and apply pressure.

(*d*) Contacts should close at 85 psi and open at 75 psi.

Note. Adjustment of pressure setting will determine when switch will operate on increasing pressure. Adjustment of the differential setting will determine at which point the switch will return to normal contact position or decreasing pressure.

(*e*) Remove air lines and pressure gage. Reconnect the hydraulic tubing.

(4) *Number 2 pressure switch* (4, fig. 9-9). Power unit NE-5007 only. Interlocks missile firing circuit.

(*a*) Remove tubing (11) at connector (10). Close shutoff valve (7).

(*b*) *Remove cover to observe contacts.*

(*c*) Connect a low-pressure air supply and a 0-100 psi pressure gage to the switch at connector (10).

(*d*) Contacts should open at 90 psi and close at 40 psi.

Note. Adjustment of pressure setting will determine when switch will operate on increasing pressure. Adjustment of the differential setting will determine at which point the switch will return to normal contact position on decreasing pressure

c. *Removal.*

(1) Place the elevator on the pedestals or on the locking bars (par. 3-125).

(2) Close shutoff valves (40, 63, 108, fig. 7-1).

(3) Loosen connectors (92), and remove tubing (95) at the pressure switches (60, 93).

(4) Remove pressure switch covers and tag all wire leads.

(5) Remove the flexible conduit connector locknut inside the switch housing. Remove flexible conduit, connector and wiring from the switch.

(6) Remove attaching parts (94) at pressure switches (60, 93). Remove

switches and mounting plates (59) from power unit.

(7) Remove screws attaching pressure switch to mounting plate (59).

Note. If pressure switches cannot be adjusted properly, replace the switch. No disassembly is recommended.

d. Installation.

(1) Screw pressure switches (60, 93) to mounting plates (59) and attach to power unit with attaching parts (94).

(2) Install conduit in switch, and secure with conduit connector. Connect leads as tagged.

(3) Install tubing (95), and secure by tightening connectors (92).

(4) Open shutoff valves (40, 63, 108), check to see that pressure switches operate as follows:

(*a*) Pressure switch number 1 (60) contacts should close when hydraulic pressure is applied or maintained on the main cylinder. They should open when platform is supported by locking bars or pedestals.

(*b*) Pressure switch number 2 (93) contacts should open when hydraulic pressure is applied or maintained on the main cylinder. They should close when platform is supported by locking bars or pedestals.

9-14. Sheaves and V-Belts

a. Removal.

Note. Removal procedures are the same for hydraulic pump sheaves and for electric motor sheaves.

For removal of sheaves and V-belts, use the following procedure:

(1) Loosen nuts (12, fig. 3-33) at base of motor (16).

(2) Turn adjustment screw (13) counterclockwise to slide motor toward the pump and to allow slack on the V-belts (5).

(3) Remove V-belts (5) from pump sheave (6) and from motor sheave (10).

***Caution:* Never use tools or force to roll or pry V-belts over sheaves. This may permanently injure belts and create a safety hazard.**

(4) Remove capscrews (11) and lockwashers from sheave (10).

(5) Using capscrews (11) as jackscrews, thread screws into jackscrew holes (7). Tighten evenly until sheave (10) disengages sheave hub (8). Remove sheave.

(6) Remove sheave (8) from drive shaft (9) by removing attaching clamping screws, lockwashers, and setscrew from sheave hub.

Note. If removal of the hub is hampered by seizure of metal surfaces, drive a suitable wedge lightly in the hub slot, springing the hub free of the drive shaft.

b. Cleaning, Inspection, and Repair.

(1) Clean dirt and grease from surfaces and holes of sheave and hub with cleaning solvent.

(2) Use a bristled brush and cleaning solvent to clean V-belt grooves.

(3) Inspect for cracks, scoring, and excessive wear on machined surfaces, and inspect for thread damage. Inspect V-belts for defects.

(4) Replace all defective parts as necessary.

Note. If one or more V-belts require replacement, always install a complete set of V-belts.

c. Installation.

Note. Installation for hydraulic pump sheaves as for electric motor sheaves.

(1) Install hub (8) on drive shaft (9), by installing attached screws, lockwashers and set screws.

(2) Install sheave (10) on hub (8), and secure with screws (11), and lockwashers.

Note. A gap of approximately 1/8 inch must exist between the face of the sheave and the flange of the sheave hub to insure satisfactory taper grip and press fit. Do not close this gap.

CHAPTER 3

OPERATOR AND ORGANIZATIONAL MAINTENANCE INSTRUCTIONS

Section I. OPERATOR AND ORGANIZATIONAL MAINTENANCE TOOLS AND EQUIPMENT

3-1. Special Tools and Equipment

No special tools or equipment are required by the operator or organizational maintenance personnel for the maintenance of the elevator.

3-2. Basic Issue Tools and Equipment

Tools and repair parts issued with or authorized for the elevator equipment are listed in appendix B.

3-3. Organizational Maintenance Repair Parts

Organizational maintenance repair parts are listed in TM 5-1450-201-25P.

Section II. LUBRICATION

3-4. General Lubrication Instructions

a. This section contains reproductions of lubrication orders and lubrication instructions which are supplemental to, and are specifically covered in, the lubrication orders.

b. The lubrication orders, shown in figure 3-1 are exact reproductions of the approved lubrication orders for the elevator. For current lubrication order, refer to DA Pam 310-4.

3-5. Detailed Lubrication Information

a. Care of Lubricants. Keep all lubricants (grease and oil) in closed containers and store in a clean, dry place away from external heat. Allow no dirt, dust, water, or other foreign material of any kind to mix with the lubricants.

b. Points of Lubrication Refer to figure 3-1 for illustration of lubrication points.

c. Cleaning. Keep all external parts not requiring lubrication clean of lubricants. Before lubricating the equipment, wipe all lubrication points free of dirt and grease. Clean all lubrication points after lubricating to prevent the accumulation of foreign matter.

d. Operation Immediately After Lubrication. Operate the elevator immediately after lubrication. Inspect connections which might show hydraulic fluid leakage. Operate, check hydraulic fluid level, and add hydraulic fluid if necessary.

Section III. PREVENTIVE MAINTENANCE SERVICES

3-6. General

To insure that the elevator is ready for operation at all times, it must be inspected systematically, so that defects may be discovered and corrected before they result in serious damage or failure. The necessary preventive maintenance services to be performed are listed and described in paragraphs 3-7 and 3-8. The item numbers indicate the seqence of minimum inspection requirements. Defects discovered during the operation of the unit will be noted for future correction, to be made as soon as

(3) Install V-belts (5) making certain that each belt is seated in grooves of sheaves.

Note. Do not force V-belts, If necessary, move motor forward to facilitate installation.

(4) Turn adjustment screw (13) clockwise to increase tension or counterclockwise to decrease tension of V-belts.

(5) Check V-belt tension by deflecting, with hand pressure, midway between the sheaves. Proper deflection is approximately 3/4 inch.

(6) Tighten nuts (12) at base of motor (16), and aline motor and pump sheaves.

9-15. Motors

a. Removal.

Warning: **Before removing motor, be certain main power switch is turned OFF.**

(1) Remove V-belts (5, fig. 3-33) and sheave (10) in accordance with paragraph 9-14*a*.

(2) Remove nuts (12) securing motor (16) to motor subbase (14).

(3) With rigging (half-ton minimum capacity chain hoist recommended), remove motor from power unit.

(4) Remove shims, if any, between motor or subbase, and mark for reinstallation.

b. Disassembly. Refer to TM 5-764.

c. Cleaning, Inspection, and Repair. Refer to TM 5-764.

d. Reassembly. Refer to TM 5-764.

e. Installation.

(1) Install shims as marked during removal.

(2) With rigging, install motor in power unit.

(3) Install nuts (12) fingertight on base studs.

(4) Install V-belts (5) and sheaves (10) in accordance with paragraph 9-14*c*.

APPENDIX A

REFERENCES

A-1. Field Maintenance

TM 5-764 ..... Electric Motor and Generator Repair.

A-2. Lubrication

LO 5-1450-201-15-1 ..... Elevator, Hydraulic: Special Purpose, Special
LO 5-1450-201-15-2 ..... AAA Facilities, Automatically operated Doors and Allied Control Equipment (Wayne Pump) Type B, Type C, Types D, B4, and B5.

A-3. Painting and Preservation

TM 9-213 ..... Painting Instructions for Field Use.

A-4. Preventive Maintenance

AR 750-5 ..... Organization, Policies, and Responsibilities for Maintenance Operations.
TM 38-750 ..... Army Equipment Record Procedures.

A-5. Radio Interference Suppression

TM 11-483 ..... Radio Interference Suppression.

A-6. Supply Publications

C9100-IL ..... Petroleum, Petroleum-Base Products and Related Material.
TM 5-1450-201-25P ..... Organizational Direct and General Support, and Depot Maintenance Repair Parts and Special Tool Lists. Elevator, Hydraulic; Guided Missile, Automatic Doors, Wayne Pump Company Type B; FSN 1450-315-2804, Type C; FSN 1450-315-2805, Type B4, B5; FSN 1450-570-6923; Type D; FSN 1450-656-2310.

APPENDIX B

BASIC ISSUE ITEMS AND OPERATING SUPPLIES

Section I. INTRODUCTION

B-1. Scope

This appendix lists items which accompany the hydraulic elevator or are required for installation, operation, or operator's maintenance. Section II lists the accessories, tools, and publications required for the maintenance and operation by the operator, initially issued or authorized with the equipment. Section III lists the maintenance and operating supplies required for initial operation.

B-2. Explanation of Columns

The following provides an explanation of columns in the tabular list in section II:

a. Source, Maintenance, and Recoverability Codes (Column 1).

(1) Source code, column la, indicates the selection status and source for the listed item. Source codes are—

Code	Explanation
P	Applied to repair parts which are stocked in or supplied from the GSA/DSA Army Supply system, and authorized for use at indicated maintenance categories.
M	Applied to repair parts which are not procured or stocked but are to be manufactured at indicated maintenance categories.
X2	Applied to repair parts which are not stocked. The indicated maintenance category requiring such repair parts will attempt to obtain them through cannibalization. If not obtainable through cannibalization, such repair parts will be requisitioned with supporting justification through normal supply channels.

(2) Maintenance Code, column 1b, indicates the lowest category of maintenance authorized to install the listed item. The maintenance level code is:—

Code	Explanation
O	Organizational maintenance (operator/crew)

b. Federal Stock Number, column 2, indicates the Federal stock number for the item.

c. Description, column 3, indicates the Federal item name and any additional description required. A five-digit manufacturer's code or other service code and part number is included in parentheses for reference. Repair parts quantities included in kits, sets, and assemblies are shown in front of the repair parts name.

d. Quantity Incorporated in Unit, column 6, indicates the total quantity of the item used on the equipment.

e. Quantity authorized, column 7, indicates the total quantity of an item required to be on hand and necessary for operation and maintenance of the equipment. Items to be requisitioned as required as indicated by an asterisk.

B-3. Explanation of Columns Contained Contained in Section III

a. Item. This column contains numerical sequence item numbers assigned to each component application to facilitate reference.

b. Federal Stock Number. The Federal stock number will be shown in this column and will be used for requisitioning purposes.

c. Description. The item and a brief description are shown.

e. Quantity Required for Initial Operation. This column lists the quantity of each maintenance or operating supply item required for initial operation of the equipment.

e. Quantity Required for 8 Hours operation. Quantities listed represent the estimated requirements for an average eight hours of operation.

Section II. BASIC ISSUE ITEMS LIST

(1) Source maint and recov code			(2)	(3)	(4)	(5)	(6)	(7)	(8) Illustration	
(A) Source	(B) Maint	(C) Recov	Federal stock No.	Description	Unit of issue	Qty inc in unit pack	Qty inc in unit	Qty auth	(A) Fig. No.	(B) Item or sym No.
				GROUP 31—BASIC ISSUE ITEMS, MANUFACTURER INSTALLED						
				3100—BASIC ISSUE ITEMS, MANUFACTURER OR DEPOT INSTALL						
P	O	--	7610-355-7130	CASE: maintenance and operational manuals, cotton duct, water repellent, mildew resistant MIL B-11743B.	--	--	1	1		
				DEPARTMENT OF THE ARMY LUBRICATION ORDER LO 5-1450-201-15-1 LO 5-1450-201-15-2.	--	--	1	1		
				DEPARTMENT OF THE ARMY ORGANIZATIONAL, DS, GS, AND DEPOT MAINTENANCE MANUAL TM 5-1450-201-15.	--	--	2	2		
				DEPARTMENT OF THE ARMY ORGANIZATIONAL, DS, GS, AND DEPOT MAINTENANCE REPAIR PARTS MANUAL TM 5-1450-201-25P.	--	--	2	2		
P	O	--	4210-288-8270	EXTINGUISHER, FIRE MONOBROMOTRIFLOUROMETHANE: charged hand shatterable cylinder, penetrating seal valve, stored pressure, w/bracket, 2.75 lbs (Halon 1301) MIL-SPEC E52031 (GE) (Repair Parts Manual Group 7603).	--	--	1	1		
				Note. Requisition CT/CO extinguisher until depot stocks are exhausted.						

Section III. MAINTENANCE AND OPERATING SUPPLIES

Item	Component application	Source of supply	Federal stock No.	Description	Quantity required for initial operation	Quantity required for 8 hrs. operation	Notes
1.	3002 DOOR WEATHER SEAL.	----	---- -------	COLLOIDAL GRAPHITE	5 gal		(1) Includes quantity of hydraulic fluid to fill hydraulic system as follows.
2.	PIVOT PINS	----	9150-285-1577	COLLOIDAL GRAPHITE (3) and (5)	5 gal		
		----	9150-234-5583(2)	LCG	1 qt	(3)	2 qt—hydraulic pedestal 1/4 qt air filter
3.	3006 PEDESTAL	----	----------	HYDRAULIC FLUID: 55 gal drum as follows:			271 gal—hydraulic reservoir (type B,C, B-4 and B-5).
		----	9150-290-3865(2)	HFC	2 qt	(3)	(2) See C9100-IL for additional data and requisition ing procedure.
4.	4301 AIR FILTER	----	---- -----	HYDRAULIC FLUID: HFC	1/4 qt	(3)	
5.	4302 PUMP ADAPTER BEARING.	----	----------	GREASE BALL AND ROLLER BEARING 1 LB can as follows:	1 lb.	(3)	(3) See current L.O. for gr grade application and replenishment intervals.
		----	9150-526-4205(2)	BR			(4) Use hydraulic fluid as prescribed in item 1.
6.				GREASE, AUTOMATIVE AND ARTILIERY: 5 lb can as follows:			(5) For doors, seals and piv pins.
		----	9150-190-0905(2)	GAA	5 lb	(3)	

APPENDIX C

MAINTENANCE ALLOCATION

Section I. INTRODUCTION

C-1. General

a. Section I provides a general explanation, of all maintenance and repair functions authorized at various maintenance levels.

o. Section II designates overall responsibility for the performance of maintenance operations on the identified end item or component. The implementation of the maintenance tasks upon the end item or component will be consistent with the assigned maintenance operations.

c. Section III lists the special tools and test equipment required for each maintenance operation as referenced from section II.

d. Section IV contains supplemental instructions, explanatory notes and/or illustrations required for a particular maintenance function.

C-2. Explanation of Columns in Section II

a. Functional Group Number. The functional group is a numerical group set up on a functional basis. The applicable functional grouping indexes (obtained from TB 750-93-1 Functional Grouping Codes) are listed on the MAC in the appropriate numerical sequence. These indexes normally are set up in accordance with their function and proximity to each other.

b. Componant Assembly Nomenclature. This column contains a brief description of the components of each functional group.

c. Maintenance Operations and Maintenance Levels. This column lists the various maintenance operations (A through J) and indicates the lowest maintenance level authorized to perform these operations:

(1) The symbol designations for the various maintenance levels as follows:
O/C—Operator or crew
O—Organizational Maintenance
F—Direct support maintenance
H—General support maintenance
D—Depot maintenance

(2) The maintenance operations are defined as follows:

(*a*) *Service.* Operations required periodically to keep the item in proper operating condition, i.e., to clean, preserve, drain, paint, and replenish fuel, lubricants, hydraulic, and deicing fluids, or compressed air supplies.

(*b*) *Adjust.* Regulate periodically to prevent malfunction. Adjustments will be made commensurate with adjustment procedures and associated equipment specifications.

(*c*) *Aline.* Adjust two or more components of an electrical or mechanical system so that their functions or properly snychronized or adjusted.

(*d*) *Calibrate.* Determine, check, or rectify the graduation of an instrument, weapon, or weapons system or components of a weapons system.

(*e*) *Inspect.* Verify serviceability and detect incipient electrical or mechanical failure by close visual examination.

(*f*) *Test.* Verify serviceability and detect incipient electrical or mechanical failure by measuring the mechanical or electrical characteristics

of the item and comparing those characteristics with authorized standards. Tests will be made commensurate with test procedures and with calibrated tools and/or test equipment referenced in the MAC.

(*g*) *Replace.* Substitute serviceable components, assemblies, and subassemblies for unserviceable counterparts or remove and install the same item when required for the performance of other maintenance operations.

(*h*) *Repair.* Restore to a serviceable condition by replacing unserviceable parts or by any other action required using available tools, equipment and skills—to include welding, grinding, riveting, straightening, adjusting, and facing.

(*i*) *Overhaul.* Restore an item to a completely serviceable condition (as prescribed by serviceability standards developed and published by the commodity commands) by employing techniques of "Inspect and Repair Only as Necessary" (IROAN). Maximum use of diagnostic and test equipment combined with minimum disassembly during overhaul. Overhaul may be assigned to any level of maintenance except organizational, provided the time, tools, equipment, repair parts authorization, and technical skills are available at that level. Normally, overhaul as applied to end items, is limited to depot maintenance level.

(*j*) *Rebuild.* Restore to a condition comparable to new by disassembling to determine the condition comparable to new by disassembling to determine the condition of each component part and reassembling using serviceable, rebuilt, or new assemblies, subassemblies, and parts.

d. Reference Note. This column, subdivided into columns K and L, is provided for referencing the SPECIAL TOOLS AND TEST EQUIPMENT REQUIREMENTS (section III) and REMARKS (section IV) that may be associated with maintenance operations (section II).

C-3. Explanation of Columns in Section III

a. Reference Code. This column consists of a number and a letter separated by a dash. The number references the T & TE requirements column on the MAC. The letter represents the specific maintenance operation which the item is to be used. The letter is representative of columns A through J on the MAC.

b. Maintenance Level. This column shows the lowest level of maintenance authorized to use the special tool or test equipment.

c. Nomenclature. This column lists the name or identification of the tool or test equipment.

d. Tool number. This column lists the manufacturer's code and part number, or Federal stock number, of tools and test equipment.

C-4. Explanation of Columns in Section IV

a. Reference Code. This column consists of two letters separated by a dash, both of which are references to section II. The first letter references a maintenance operation, columns A through J.

b. Remarks. This column lists information pertinent to the maintenance operation being performed, as indicated on the MAC section II.

Section II. MAINTENANCE ALLOCATION CHART

Functional group No.	Component assembly nomenclature	Maintenance operations: Essentiality	A Service	B Adjust	C Aline	D Calibrate	E Inspect	F Test	Maintenance levels: G Replace	H Repair	I Overhaul	J Rebuild	K T&TE RQMT	Note ref: L Remarks
22	BODY CHASSIS OR HULL, AND ACCESSORY ITEMS.													
2210	Data Plates:													
	Plates, identification	--	----	--	--	--	----	--	O					
	Plates, data (A.I.P.)	--	----	--	--	-	----	--	F					
30	ELEVATORS, SPECIAL PURPOSE.													
3000	Hydraulic Elevator Assembly:													
	Angle assemblies; forms, pan; plates, backing.	--	----	--	--	--	----	--	H					
	Cover plate, form pan; bumper assembly.	--	----	--	--	--	----	--	F					
3001	Equalizer Assembly:													
	Equalizer assembly	--	O/C	--	--	--	----	--	F	F				
	Cable or rope, equalizer	--	----	O	--	--	O	--	O	--	--	--	--	A
	Sheave assembly, equalizer	--	O/C	--	--	--	----	--	O	F				
	Bolt, eye	--	----	--	--	--	O	--	O					
	Bearings, pulley	--	O	--	--	--	----	--	H					
	Rail assembly, guide	--	----	--	--	--	O	--	H					
	Shaft, pulley; fittings, lubrication; roller, separator.	--	----	--	--	--	----	--	O					
	Separator assembly, cable	--	----	--	--	--	----	--	O	O				
3002	Doors, Hinges:													
	Arm assemblies, door	--	----	--	--	--	----	--	F	F				
	Box assembly, hinge	--	----	--	--	--	----	--	H	F				
	Lever assembly	--	----	--	--	--	----	--	H					
	Brackets, sensitive switch	--	----	--	--	--	----	--	F					
	Door assemblies	--	O	--	--	--	----	--	H	F	--	--	--	B
	Plate assembly, cylinder hinge box; seals; door stop assembly.	--	----	--	--	--	----	--	F					
	Rubber strips, door; slide	--	----	--	--	--	O	--	F	F				
	Rubber block, door stop pin.	--	----	--	--	--	----	--	O					
3003	Chassis, Platform and Guide Rail Assembly:													
	Brackets, guide rail	--	----	--	--	--	----	--	F					
	Chassis assemblies, elevator; bracket assembly castor.	--	----	--	--	--	----	--	H					
	Chassis subassembly	--	----	--	--	--	----	--	H	F				
	Couplings, pipes	--	----	--	--	--	----	--	F					
	Platform subassemblies	--	----	--	--	--	----	--	H	F				
	Insert, wall; platform assemblies.	--	----	--	--	--	----	--	H					
	Rail assemblies, guide	--	O/C	F	--	--	F	--	H	--	--	--	--	C

LUBRICATION ORDER

LO 5-1450-201-15-1

18 JULY 1966 (Supersedes LO 5-1450-200-20-1,-2, 30 DEC. 1963 and LO 5-1450-201-15-1, 1 FEB. 1966)

ELEVATOR, HYDRAULIC: SPECIAL PURPOSE SPECIAL AAA FACILITIES, AUTOMATICALLY OPERATED DOORS AND ALLIED CONTROL EQUIPMENT, (WAYNE PUMP) TYPE B; TYPE C; TYPE D; TYPE B-4 AND B-5

Reference: C9100-IL, TM 5-1450-201-15, LO 5-1450-201-15-2

Intervals are based on normal hours of operation. Adjust to compensate for abnormal operations and severe conditions. During inactive periods sufficient lubrication must be performed for adequate preservation.

Clean fittings before lubricating.

Relubricate after washing.

Clean parts with SOLVENT, dry-cleaning, or with OIL, fuel, Diesel. Dry before lubricating.

Lubricate points indicated by dotted arrow shafts on both sides of the equipment.

FOLD

FOLD

LUBRICANT • INTERVAL

Fluid Level Gage (Check level.) — W

Sediment Gage (Check for contamination.) — S

RESERVOIR SUMP DRAIN. (Drain sludge and clean during filter services.) (See note 2.) — A

Pump No. 1 Adapter Bearing (Serviced by Direct Support Personnel.) — BR A

Pump No. 1 Motor Bearing (Sealed bearings, no lubrication required.)

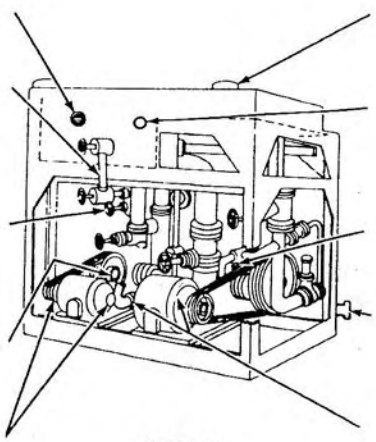

PUMP UNITS

INTERVAL • LUBRICANT

HFC — Hydraulic Fluid Tank Fill (See key.)

A — Hydraulic Fluid Suction Line Strainer. (Disassemble clean and install at time of Filter Service).

A BR — Pump No. 2 Adapter Bearing (Serviced by Direct Support Personnel.)

A — Hydraulic Fluid Strainer (Remove, clean, and install at time of filter service).

Pump No. 2 Motor Bearings (Sealed bearings, no lubrication required.)

MEC 1450-201-15/3-1 ①

Front

Figure 3-1 (1). Lubrication order, LO 5-1450-201-15-1.

Functional group No.	Component assembly nomenclature	Essentiality	A Service	B Adjust	C Aline	D Calibrate	E Inspect	F Test	G Replace	H Repair	I Overhaul	J Rebuild	K T&TE RQMT	L Remarks
		Maintenance operations							Maintenance levels				Note ref	
3006	Pedestals, Leveling Jacks:													
	Pedestal assemblies, adjustable.	--	O/C	O	--	--	----	--	O	O	--	--	--	D
	Chain, safety; pipe assemblies.	--	----	--	--	--	----	--	O					
	Pedestal assembly, buffer	--	O	--	--	--	----	--	O	F	--	--	1	E
	Rod, liners; cylinder and springs rings O.	--	----	--	--	--	----	--	F					
	Buffer assembly, pedestal	--	O/C	--	--	--	----	--	O	H				
3007	Bar Assembly, Locking:													
	Bar assemblies, locking	--	O/C	F	--	--	----	--	H					
	Bar, locking	--	O/C	--	--	--	----	--	H	F				
	Linkage, bar operating; pivot assemblies.	--	----	--	--	--	----	--	H					
	Bumper, rubber; fitting, lubrication.	--	----	--	--	--	----	--	O					
	Cams, coupling	--	----	--	--	--	----	--	F					
40	ELECTRIC MOTORS.													
4000	Motor Assembly	--	----	--	--	--	----	--	F	H	H			
4007	Drive Components:													
	Belts, V	--	----	O	--	--	O/C	--	O	--	--	--	--	F
	Pulley; hub; sheave	--	----	--	--	--	----	--	O					
42	ELECTRICAL EQUIPMENT.													
4201	Transformer Power line or Distribution	--	----	--	--	--	----	F	F					
4202	Electrical Controls:													
	Cabinets, electrical; terminal boards.	--	----	--	--	--	----	--	H					
	Cables, control; control station.	--	----	--	--	--	----	--	H	H				
	Stand, elevator control station; panel assembly, control.	--	----	--	--	--	----	--	H					
	Switch box, master	--	----	--	--	--	----	--	F	F				
4203	Circuit Breaker, Cutout Device													
	Circuit breaker assemblies	--	----	--	--	--	----	--	F	O				
	Cage, high voltage protection; repair kit, circuit breaker.	--	----	--	--	--	----	--	O					
	Block, hood; contact set	--	----	--	--	--	----	--	F					
	Relays; heaters; thermal	--	----	O	--	--	----	--	F	F				
	Switches; rotary, push	--	----	--	--	--	----	--	F	F				
	Switches, pressure	--	----	F	--	--	----	--	F					
4206	Thermostatic, Automatic and Manual Control Devices:													
	Valves, solenoid	--	----	O	--	--	----	--	F	F				
	Cap, metering valve; handwheel valve; cap, dust.	--	----	--	--	--	----	--	O					
	Coil, solenoid; packing, ring O.	--	----	--	--	--	----	--	F					

Functional group No.	Component assembly nomenclature	Essentiality	A Service	B Adjust	C Aline	D Calibrate	E Inspect	F Test	G Replace	H Repair	I Overhaul	J Rebuild	K T&TE RQMT	L Remarks
		Maintenance operations							Maintenance levels				Note ref	
4209	Signaling Devices:													
	Bell, signal; lamps	--	----	--	--	--	----	--	O					
	Light, indicator	--	----	--	--	--	----	--	F					
43	HYDRAULIC FLUID, AIR AND VACUUM SYSTEM.													
4300	Hydraulic System:													
	Base, pumping unit	--	----	--	--	--	----	--	H					
	Guard assembly, safety; supports; brackets.	--	----	--	--	--	----	--	F					
	Pumping unit, hydraulic	--	O/C	O	--	--	----	--	H	F	H			
4301	Strainers, Filters, Hose, Pipe Fittings, Tubing:													
	Flange assemblies; couplings; elbows; fittings;	--	----	--	--	--	----	--	F					
	tubing; manifolds.	--	----	--	--	--	----	--	O					
	Hingers, pipe; hose assemblies.													
	Supports; shields; plates; filter element.	--	----	--	--	--	----	--	F					
	Screen, strainer	--	O	--	--	--	----	--	O					
	Strainer assembly, sediment	--	O	--	--	--	----	--	F	O				
	Strainer, suction	--	----	O	--	--	----	--	O	O				
4302	Pump and Pump Drives:													
	Pumps, hydraulic	--	O/C	--	F	--	----	--	F	H	H	--	2	
	Fitting, lubrication; hub, pump drive; pulley; sheave.	--	----	--	--	--	----	--	O					
	Shafts, driving and driven; seal pump shaft.	--	----	--	--	--	----	--	H					
4305	Manifold and/or Control Valves:													
	Valves, gate and globe	--	----	O	--	--	----	--	F	O				
	Handwheel, valve; packing, valve stem.	--	----	--	--	--	----	--	O					
	Valve, hydraulic control; valves relief and check.	--	----	--	--	--	----	--	F	F				
4307	Hydraulic Cylinders:													
	Cylinder assembly, hydraulic; main; plunger and cylinder.	--	----	--	--	--	----	--	H	H				
	Packing, wiper ring; pan, drip	--	----	--	--	--	----	--	O					
	Packing assembly, upper bearing.	--	----	--	--	--	----	--	F					
	Cylinder assemblies	--	----	--	--	--	----	--	F	D				
4308	Liquid Tanks or Reservoir:													
	Tank, oil; main supply	--	O	--	--	--	----	--	H	H	--	--	3	G
	Cover, access; oil tank; pipe assembly, breather.	--	----	--	--	--	----	--	O					
	Air cleaner assembly, intake breather, oil tank.	--	O	--	--	--	----	--	O					

Functional group No.	Component assembly nomenclature	Maintenance operations: Essentiality	A Service	B Adjust	C Aline	D Calibrate	E Inspect	F Test	G Replace	H Repair	I Overhaul	J Rebuild	K T&TE RQMT	L Remarks
		Maintenance levels											Note ref	
47	GAGES (NONELECTRICAL WEIGHING AND MEASURING DEVICES.													
4702	Gages:													
	Gage assembly, sight; oil level.	--	O	--	--	--	--	--	O					
	Glass or plastic tubing; gage pressure; valve, globe; bushing tees; fittings.	--	--	--	--	--	--	--	O					
	Valve assembly, sight glass.	--	--	--	--	--	--	--	F	O				
76	FIRE FIGHTING EQUIPMENT.													
7603	Fire Extinguisher:													
	Extinguisher, fire	--	O/C	--	--	--	--	--	O/C					
	Cylinder and seal	--	--	--	--	--	--	--	O/C					

Section III. SPECIAL TOOL AND SPECIAL TEST EQUIPMENT REQUIREMENTS

Reference code	Maintenance level	Nomenclature	Tool number
1 - H	F	Holder; cylinder holding	(97167) 11523T6
1 - H	F	Ring, holding; wiper strip	(97167) 11523T5
1 - H	F	Unit, spring assembly	(97167) 11523T3
1 - H	F	Wrench, open end, fixed; for holding piston rod	(5120-804-4360)
2 - C	F	Straight edge	5210-778-3519
3 - A	O	Wrench, oil reservoir filler cap	5120-778-3526

Section IV. REMARKS

Reference code	
A - E	Inspect for worn, frayed, and broken strands; also adjust.
B - A	Lubricate door hinges with an approved lubricant.
C - A	Clean and lubricate an Approved Lubricant.
D - A	Keep hydraulic fluid to proper level.
E - A	Clean and coat the exposed threads with an approved lubricant.
F - B	Check V-belt tension and alinement; also for frayed or worn belts.
G - A	Clean, flush, and refill oil tank with clean oil.

INDEX

By Order of the Secretary of the Army:

HAROLD K. JOHNSON,
General, United States Army,
Chief of Staff.

Official:

KENNETH G. WICKHAM,
Major General, United States Army,
The Adjutant General.

Distribution:

To be distributed in accordance with DA Form 12-32, Sec II (Unclas) requirements for Organizational maintenance, Nike-Hercules, Improved Nike-Hercules and Hi-Par Hercules missile systems.

☆ U. S. GOVERNMENT PRINTING OFFICE : 1968 O - 325-512

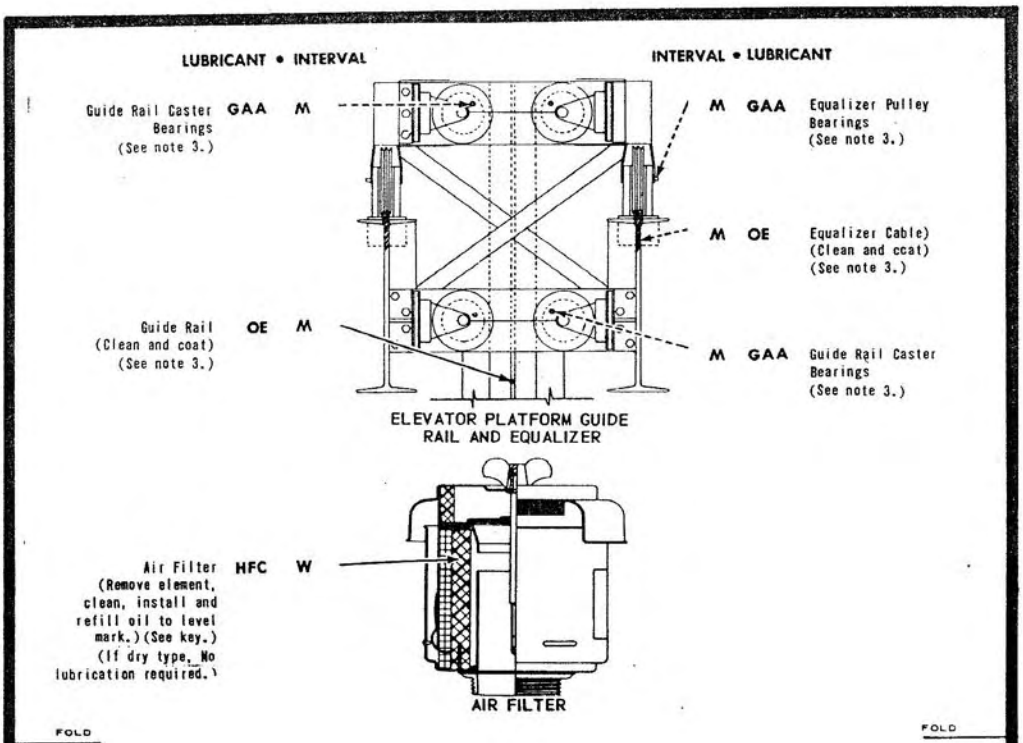

- KEY -

LUBRICANTS	CAPACITY	EXPECTED TEMPERATURES			INTERVALS
		Above+ 32°F	+40°F to -10°F	0°F to -65°F	
OE-OIL, Engine, Heavy Duty		OE 10			W-Weekly M-Monthly Q-Quarterly S-Semi-annually A-Annually
HFC-HYDRAULIC FLUID, Noncombustible		HFC			
Hydraulic Fluid Tank	1,084 qts.				
Air Filter	1/4 qt.				
GAA-GREASE, Automotive and Artillery		All Temperatures			
BR-GREASE, Ball and Roller Bearing					

NOTES:

1. OIL CAN POINTS. M, lubricate limit switch arm rollers, roller lever bearings with OE.

2. HYDRAULIC FLUID SYSTEM. The fluid in the reservoir will be filtered annually. Intervals may be adjusted, based on quarterly laboratory analysis. This service is to be performed by Direct Support Maintenance Personnel. Refer to TM 5-1450-201-15 for detailed instructions.

3. ELEVATOR PLATFORM GUIDE RAIL AND EQUALIZER. These points of lubrication are identical on opposite end of elevator.

Copy of this Lubrication Order will remain with the equipment at all times; instructions contained herein are mandatory.

BY ORDER OF THE SECRETARY OF THE ARMY:

HAROLD K. JOHNSON,
General, United States Army,
Chief of Staff.

OFFICIAL:

J.C. LAMBERT,
Major General, United States Army,
The Adjutant General.

MEC 1450-201-15/3-1 ②

Back

Figure 3-1 (2). Lubrication order, LO 5-1450-201-15-1—Continued.

LUBRICATION ORDER

LO 5-1450-201-15-2

18 JULY 1966 (Supersedes LO 5-1450-200-20-1,-2, 30 DEC. 1963 and LO 5-1450-201-15-2, 1 FEB. 1966)

ELEVATOR, HYDRAULIC: SPECIAL PURPOSE SPECIAL AAA FACILITIES, AUTOMATICALLY OPERATED DOORS AND ALLIED CONTROL EQUIPMENT,(WAYNE PUMP) TYPE B; TYPE C; TYPE D; TYPE B-4 AND B-5

Reference: C9100-IL,TM 5-1450-201-15 LO 5-1450-201-15-1

Intervals are based on normal hours of operation. Adjust to compensate for abnormal operations and severe conditions. During inactive periods sufficient lubrication must be performed for adequate preservation.

Clean fittings before lubricating.

Relubricate after washing.

Clean parts with SOLVENT, dry-cleaning, or with OIL, fuel, Diesel. Dry before lubricating.

Lubricate points indicated by dotted arrow shafts on both sides of equipment.

LUBRICANT • INTERVAL

INTERVAL • LUBRICANT

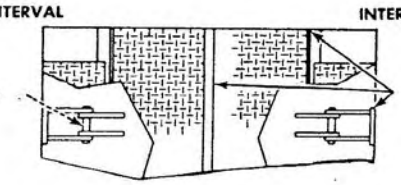

Door Hinge Pin (See note 3.) GAA M

M Door Weather Seal (See note 2.)

FOLD

FOLD

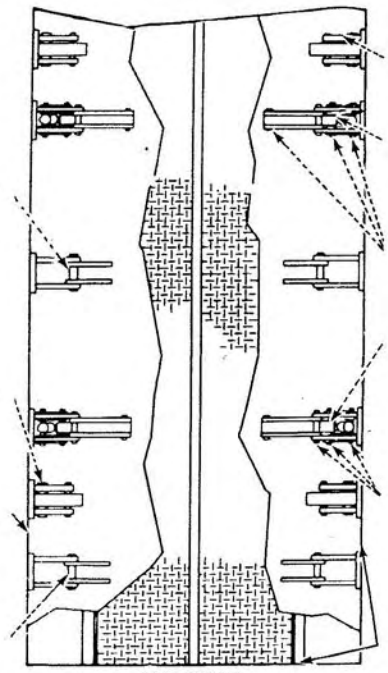

Door Hinge Pin (See note 3.) GAA M

Locking Bar Pivot Pin (3 fittings per assembly.) (See note 3) GAA M

Door Weather Seal (See Note 2.) M

Door Hinge Pin (See note 3) GAA M

M GAA Locking Bar Pivot Pin (3 fittings per assembly.)

M GAA Door Cylinder Pivot Pin (See note 3.)

M GAA Door Arm Pivot Pins (See note 3.)

M GAA Door Cylinder Pivot Pin (See note 3.)

M GAA Door Arm Pivot Pins (See note 3.)

M Door Weather Seal (See note 2.)

DOOR LINKAGE

MEC 1450-201-15/3-1 (3)

Front

Figure 3-1 (3). Lubrication order, LO 5-1450-201-15-2—Continued.

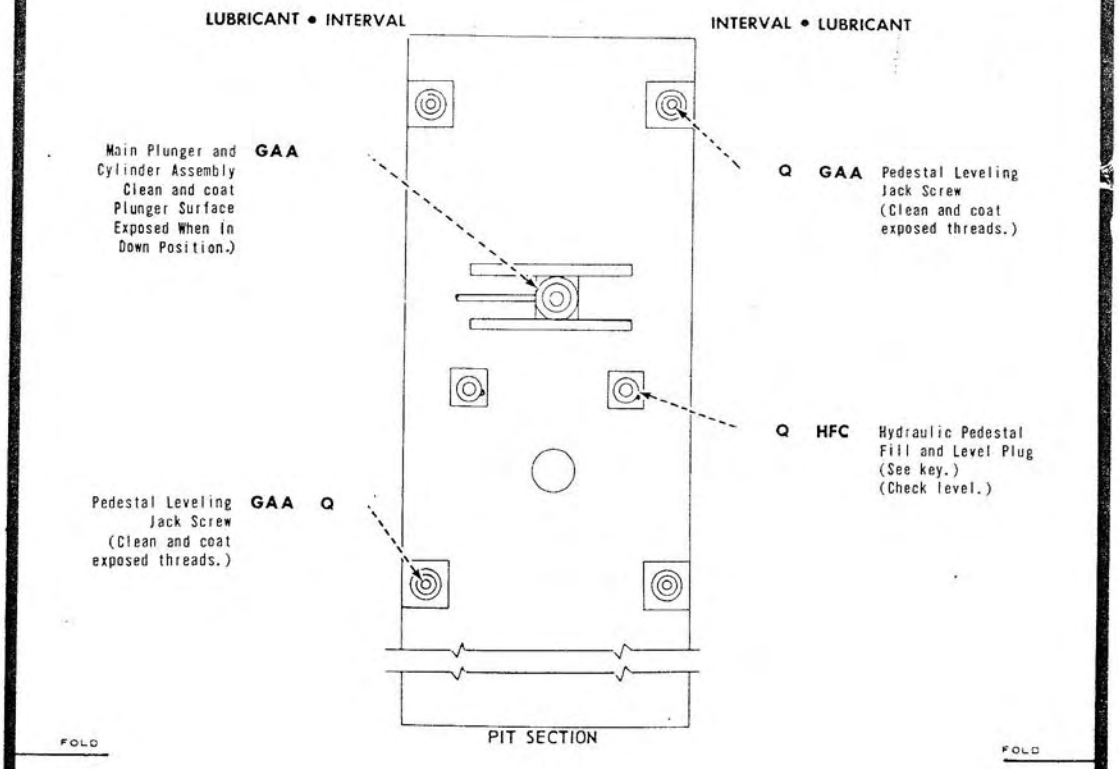

- KEY -

LUBRICANTS	CAPACITY	EXPECTED TEMPERATURES			INTERVALS
		Above + 32°F	+40°F to -10°F	0°F to -65°F	
OE-Engine, Heavy Duty		OE-30	OE-10	OE-10	W-Weekly M-Monthly Q-Quarterly S-Semi-annually A-Annually
HFC-HYDRAULIC FLUID, Noncombustible		All Temperatures			
LCG-OIL, lubricating pivot pins					
GAA-GREASE, Automotive and Artillery					

NOTES:

1. OIL CAN POINTS. M, lubricate limit switch arm rollers, roller lever bearings with OE.

2. DOOR WEATHER SEAL. M, clean and apply colloidal graphite FSN 9150-285-1577. To seal and to fittings perpendicular sides and ends of the platform.

3. PIVOT POINTS. Door hinges, door cylinders and locking bar cylinders. All pivot points with grease fittings use GAA. All pivot points without grease fittings, use colloidal graphite. All pivot points binding remove, clean and lubricate with colloidal graphite (FSN 9150-285-1577).

Copy of this Lubrication Order will remain with the equipment at all times; instructions contained herein are mandatory.

BY ORDER OF THE SECRETARY OF THE ARMY:

HAROLD K. JOHNSON,
General, United States Army,
Chief of Staff.

OFFICIAL:
J. C. LAMBERT,
Major General, United States Army,
The Adjutant General.

MEC 1450-201-15/3-1 (4)

Back

Figure 3-1 (4). Lubrication order, LO 5-1450-201-15-2—Continued.

operation has ceased. Stop operation immediately if a deficiency is noted during operation which would damage the equipment if operation were continued. All deficiencies and shortcomings will be recorded, together with the corrective action taken, on DA Form 2404 Equipment Inspection and Maintenance Worksheet), at the earliest possible opportunity.

3-7. Daily Preventive Maintenance Services

This paragraph contains an illustrated, tabulated listing of preventive maintenance services which must be performed by the operator. The item numbers are listed consecutively and indicate the sequence of minimum requirements. Refer to figure 3-2 for the daily preventive maintenance services.

3-8. Quarterly Preventive Maintenance Services

a. This paragraph contains an illustrated tabulated listing of preventive maintenance services which must be performed by organizational maintenance personnel at quarterly intervals. A quarterly interval is equal to 3 calendar months or 250 hours of operation, whichever occurs first.

b. The item numbers are listed consecutively and indicate the sequence of minimum requirements. Refer to figure 3-3 for the quarterly preventive maintenance services.

PREVENTIVE MAINTENANCE SERVICES

DAILY

TM5-1450-201-15 WAYNE PUMP TYPES B, C, B-3, B-4, AND B-5 ELEVATOR

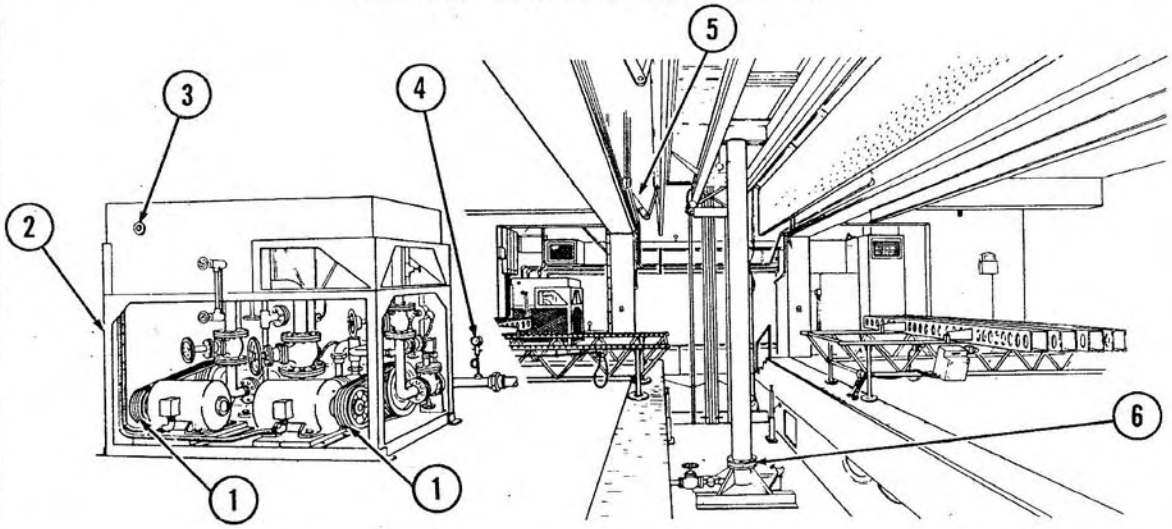

LUBRICATE IN ACCORDANCE WITH CURRENT LUBRICATION ORDER

ITEM		PAR REF
1	V-BELTS. Check for worn, frayed, or cracked belts.	
2	FIRE EXTINGUISHER. Inspect for broken seal.	
3	FLUID LEVEL GAGE. Add hydraulic fluid as indicated by level gage. Reference current L.O.	
4	HYDRAULIC FLUID PRESSURE GAGE. Correct pressure for the B and C models is 170 to 220 psi, and 350 to 450 psi for B-3, B-4, and B-5 models.	
5	DOORS. Adjust as necessary.	
6	WIPER RING. Adjust as necessary.	
	NOTE 1. OPERATION. During operation observe for any unusual noise or vibration.	

MEC 1450-201-15/3-2

Figure 3-2. Daily preventive maintenance services.

CHAPTER 1

INTRODUCTION

Section I. GENERAL

1-1. Scope

a. This manual is published for the use of the personnel to whom the Type C, B, D, B4, or B5, Special Purpose Elevator is issued. Chapters 1 through 5 provide information on the operation, preventive maintenance services, and organizational maintenance of the equipment, accessories, components, and attachments. Chapter 6 provides information for direct and general support and depot maintenance. Also included are descriptions of primary units and their functions in relationship to other components.

b. Appendix A contains a list of publications applicable to this manual. Appendix B contains the list of Basic Issue Items authorized the operator of this equipment and the list of maintenance and operating supplies required for initial operation. Appendix C contains the Maintenance Allocation Chart. The Organizational, Direct and General Support, and Depot Maintenance Repair Parts are listed in TM 5-1450-201-25P.

c. Numbers in parentheses on illustrations indicate quantity. Numbers preceding nomenclature callouts on illustrations indicate the preferred maintenance sequence.

d. DA Form 2028 (Recommended Changes to DA Publications), will be used for reporting discrepancies and recommendations for improving this manual. The form will be completed by the individual using the manual and forwarded direct to Commanding General, U. S. Army Mobility Equipment Center, ATTN: SMOME-MPD, 4300 Goodfellow Boulevard, St. Louis, Mo., 63120.

e. Report all equipment improvement recommendations as prescribed by TM 38-750.

1-2. Record and Report Forms

a. DA Form 2258 (Depreservation Guide of Engineer Equipment).

b. For other record and report forms applicable to operator, crew and organizational maintenance, refer to TM 38-750.

Note. Applicable forms, excluding SF 46 (United States Government Motor Vehicle Operator's Identification Card), which is carried by the operator, will be kept in case, maintenance and operation, mounted on the equipment.

Section II. DESCRIPTION AND DATA

1-3. Description

a. General. The Wayne special purpose hydraulic elevator systems are complete underground installations consisting essentially of three major assemblies: The hydraulic power unit (1, fig. 1-1), the elevator assembly (3 and 21), and two elevator doors (18). A general description of the three major units follows:

b. Power Unit. The power unit is located in the right aft end of the magazine (the upper level of the installation). The power unit contains motor number 1 (11, fig. 1-2) which drives pump number 1 (10), supplying hydraulic pressure to operate locking bars, doors, and elevator. Motor number 2 (9) drives pump number 2 (8) which supplies pressure to the elevator only. Also included

PREVENTIVE MAINTENANCE SERVICES

QUARTERLY

TM5-1450-201-15 WAYNE PUMP TYPES B, C, B-3, B-4, AND B-5 ELEVATOR

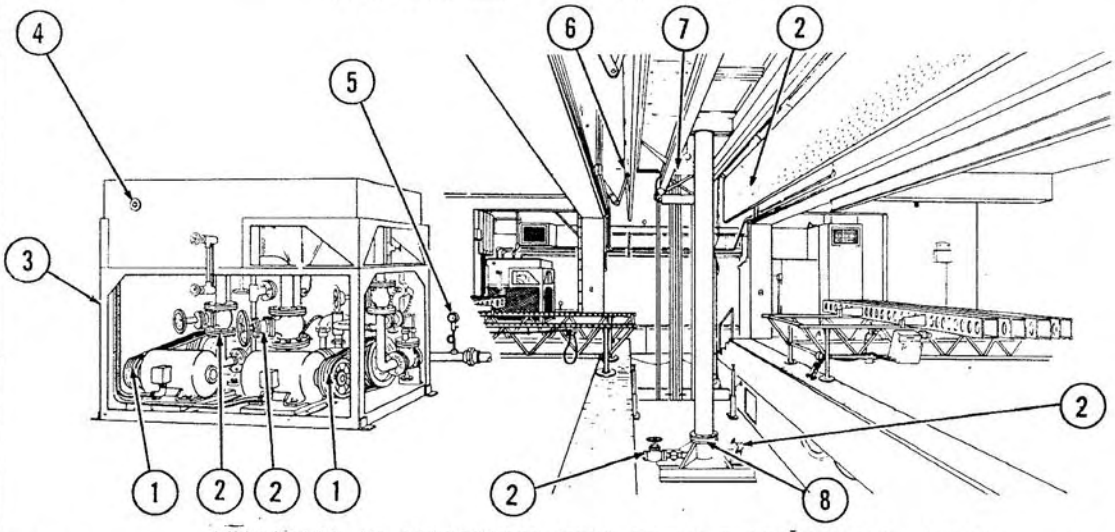

LUBRICATE IN ACCORDANCE WITH CURRENT LUBRICATION ORDER

ITEM		PAR REF
1	V-BELTS. Proper adjustment is a deflection of 3/4 inch midway between the pulleys. Replace worn or frayed belts.	3-133
2	PIPING AND VALVES. Tighten loose pipe connections and valve packing. Adjust valves as necessary.	3-101 thru 3-110
3	FIRE EXTINGUISHER. Check for broken seal. Check for full charge by shaking for sound and weight.	
4	FLUID LEVEL GAGE. Replace a cracked or broken viewing port glass or level gage ring. Add hydraulic fluid as indicated by level gage. Reference current L.O.	3-119
5	HYDRAULIC FLUID PRESSURE GAGE. Replace a defective pressure gage. Correct pressure for the B and C models is 170 to 220 psi, and 350 to 450 psi for B-3, B-4, and B-5 models.	3-118
6	DOORS. Adjust as necessary. Replace a missing or defective stop assembly.	3-126
7	EQUALIZER CABLE. Adjust as necessary. Replace worn or frayed cable.	3-128
8	WIPER RING. Adjust or replace as necessary.	3-111

MEC 1450-201-15/3-3 (1)

Figure 3-3 (1). Quarterly preventive maintenance services.

ITEM		PAR REF
	NOTE 1. OPERATIONAL TEST. During operation observe for any unusual noise or vibration.	
	NOTE 2. ADJUSTMENTS. Make all necessary adjustments during operational test.	
	NOTE 3. CONTROLS AND INSTRUMENTS. Tighten loose mounting. Replace defective instruments. With the unit operating, check for proper operation. Reference TM5-1450-201-10.	

MEC 1450-201-15/3-3 ②

Figure 3-3 (2)—Continued.

Section IV. TROUBLESHOOTING

3-9. General

This section provides information useful in diagnosing and correcting unsatisfactory operation or failure of the elevator and its components. Each trouble symptom stated is followed by a list of probable causes of the trouble. The possible remedy recommended is described opposite the probable cause. Any trouble beyond the scope of organizational maintenance will be reported to direct support maintenance.

3-10. No Response When UP Buttons on Master Control or Elevator Control Stations are Pressed

Probable cause	Possible remedy
Main power switch is OFF	Turn main power switch ON.
Control power switch is OFF (in down position).	Move lever up to turn ON.
Rotary selector switch on master control station is in wrong position for station being operated.	Move switch to correct position.
Electrical system defective	Report condition to direct support maintenance.

3-11. Motors Do Not Operate or Sequence Properly

Probable cause	Possible remedy
Faulty overload relays, timing relays, or motor starters.	Report condition to direct support maintenance.

3-12. Motors Start and Shift to Running Speed But Platform Does Not Rise

Probable cause	Possible remedy
Defective solenoid valve	Report condition to direct support maintenance.

3-13. Chatter is Heard in the Power Unit

Probable cause	Possible remedy
Faulty electrical or hydraulic system.	Report condition to direct support maintenance.
Inadequate electric power	Report condition to direct support maintenance.

3-14. Number Two Motor Loads Up During Second Starting Period

Probable cause	Possible remedy
Bypass valve not operating properly.	Report condition to direct support maintenance.

3-15. Elevator Takes Too Long To Rise From Pedestals To Ground Level

Probable cause	Possible remedy
Defective solenoid valve	Report condition to direct support maintenance.

3-16. Elevator Stops Before Reaching The Top

Probable cause	Possible remedy
Selector switch or elevator traveling cable defective.	Report condition to direct support maintenance.

3-17. Locking Bars Do Not Engage

Probable cause	Possible remedy
Defective limit switch or electrically operated valves.	Report condition to direct support maintenance.

3-18. Locking Bars Operate But Elevator Does Not Level

Probable cause	Possible remedy
Defective limit switches	Report condition to direct support maintenance.

3-19. No Response When DOWN Button is Pressed

Probable cause	Possible remedy
Selector switch is in wrong position.	Move switch to correct position.
Circuit through pushbuttons is faulty.	Report condition to direct support maintenance.

3-20. Locking Bars Do Not Retract

Probable cause	Possible remedy
Hand-operated valves closed.	Open all but pressure gage valve and sight drain valve.
Faulty circuit relay, 4-way valve, or mechanical failure.	Report condition to direct support maintenance.

3-21. Elevator Lowers Too Slowly or Settles After Stop Button is Pressed

Probable cause	Possible remedy
Solenoid valves out of adjustment.	Report condition to direct support maintenance.

3-22. No Response When DOORS OPEN Switch is Pressed

Probable cause	Possible remedy
Selector switch in wrong position.	Move switch to correct position.
Pushbutton circuit defective.	Report condition to direct support maintenance.
Proper control relays inoperative.	Report condition to direct support maintenance.

3-23. Doors Open Without 5-Second Delay When DOORS OPEN Switch is Pressed

Probable cause	Possible remedy
Timing relay out of adjustment or timing relay switches defective.	Report condition to direct support maintenance.

3-24. Warning Bell Does Not Ring When DOORS OPEN Switch is Pressed

Probable cause	Possible remedy
Clapper on bell is binding.	Correct or report condition to direct support maintenance.
Transformer or bell wire defective.	Report condition to direct support maintenance.

3-25. Warning Bell Keeps Ringing After Doors Start To Open

Probable cause	Possible remedy
Timing relay out of adjustment.	Report condition to direct support maintenance.

3-26. Motors Continue To Operate After a Door or Elevator Cycle is Completed

Probable cause	Possible remedy
Relays in control cabinets fail to open.	Turn off main power switch and report condition to direct support maintenance.

3-27. Relays Hum or Chatter

Probable cause	Possible remedy
Corroded, dirty, or pitted contactors.	Report condition to direct support maintenance.
Abnormal operating voltages.	Report condition, to direct support maintenance.

3-28. Number One Motor Does Not Start When Button is Pressed. Doors Are Open Fully. Relays 10CR, 4CR and 3CR Are Energized and Closed

Probable cause	Possible remedy
Faulty relay contacts or associated wiring.	Report condition to direct support maintenance.
Faulty timing relay	Report condition to direct support maintenance.

3-29. No Response When UP Button is Pressed at Master Control Station. (Doors Are Closed, Elevator is on Pedestals) Elevator Operates Satisfactorily When Doors are Open

Probable cause	Possible remedy
Circuit through door zone limit switch is open.	Operate the switch manually to determine if it is faulty. Lubricate and adjust switch.
Faulty selector switch or associated wiring.	Report condition to direct support maintenance.

Note. This does not apply to type B-4 and B-5 elevators.

3-30. No Response When Up Button is Pressed at Elevator Control Station. Elevator Operates Properly From Master Control Station

Probable cause	Possible remedy
Faulty selector switch or associated wiring.	Report condition to direct support maintenance.
10CR relay, relay contacts, or associated wiring defective.	Report condition to direct support maintenance.

3-31. Motor Starts But Does Not Shift To RUN; Pump Continues To Bypass

Probable cause	Possible remedy
Timing relay in motor starter cabinet defective.	Adjust timing relay to allow the motor to shift to full line voltage at 2 seconds after motor starts (par. 3-92).

Probable cause	Possible remedy
Faulty timing relay, microswitch, operating linkage, diaphragm, or solenoid coil.	Report condition to direct support maintenance.

3-32. Motor Starts and Shifts To Full Line Voltage But Pump Continues To Bypass

Probable cause	Possible remedy
Pump bypass valve not closing.	Adjust bypass valve as instructed in paragraph 3-105 or 3-110 according to power unit employed.
Faulty solenoid valve or failure of valve component.	Report condition to direct support maintenance.
Pump fails to put out enough pressure to operate elevator.	Report condition to direct support maintenance.
Pump bypass valve clogged.	Report condition to direct support maintenance.

3-33. Number 2 Motor Does Not Start and Elevator Platform Rises With Number 1 Pump Only

Probable cause	Possible remedy
Circuit through slowdown switch open.	Operate switch manually to determine that it is operating without binding. Lubricate in accordance with current lubrication order and adjust switch (par. 3-99).
Faulty 2TR timing relay or failure of a component.	Report condition to direct support maintenance.
Faulty circuit relay, relay contacts (3CR and 5CR), or associated wiring.	Report condition to direct support maintenance.

3-34. Motor Starts at Full Line Voltage With No. 2 Second Starting Bypass Period

Probable cause	Possible remedy
Timing relay in motor starting cabinet closes with no time delay.	Adjust relay to allow 2-second starting period (par. 3-92).
Defective timing relay or component.	Report condition to direct support maintenance.

3-35. When Motor Shifts To Full Line Voltage, Pressure Relief Valve Opens and Continues To Chatter

Probable cause	Possible remedy
S6 valve not properly adjusted (This applies to NE-5007 power units only).	Adjust valve (par. 3-102).
Mechanical or electrical failure of S6 valve.	Report condition to direct support maintenance.
S6 valve clogged with dirt or foreign matter.	Report condition to direct support maintenance.

3-36. Number 2 Motor Starts as Soon as UP Button is Pressed, Without Normal 2-Second Delay

Probable cause	Possible remedy
2TR timing relay out of adjustment.	Adjust relay to start No. 2 motor 2 seconds after UP button is actuated (par. 3-92).
Faulty microswitch or other component on 2TR timing relay.	Report condition to direct support maintenance.

3-37. Time for ELEVATOR UP Operation Exceeds Time Specifications

Probable cause	Possible remedy
Pump bypass valve closing too slowly.	Adjust valve to close smoothly, but closing time should not exceed 1 second (par. 3-105 or 3-110 according to power unit).
Timing relays causing excessive delay in operational sequence.	Adjust motor timing relay and 2TR to operate in 2 seconds (par. 3-92).
Mechanical failure in solenoid valves.	Report condition to direct support maintenance.
Pump relief valves not set correctly or pumps beginning to fail.	Report condition to direct support maintenance.

3-38. Elevator Rises To Intermediate Level and Stops

Probable cause	Possible remedy
51LS or 6LS not operating properly.	Adjust switches to operate when door is fully open (par. 3-93).
Selector switch 10CR relay or associated wiring defective.	Report condition to direct support maintenance.

3-39. Elevator Stops During ELEVATOR UP or ELEVATOR DOWN Sequence

Probable cause	Possible remedy
Broken wire in elevator traveling cable.	Report condition to direct support maintenance.
Defective selector switch or associated wiring.	Report condition to direct support maintenance.

3-40. Number 2 Motor Does Not Stop When Elevator Nears Hatchway

Probable cause	Possible remedy
Slow-down limit switch 19LS not operating properly.	Operate the switch manually to determine that the switch works freely. Lubricate in accordance with current lubrication order and adjust (par. 3-99).
Defective wiring or timing relay.	Report condition to direct support maintenance.

3-41. Elevator Rises Above Locking Bars But Bars Do Not Engage

Probable cause	Possible remedy
Upper limit switch 17LS does not operate properly.	Operate the switch manually to determine that it works freely. Lubricate in accordance with current lubrication order and adjust (par. 3-99).
Locking bar 4-way valve not operating properly.	Report condition to direct support maintenance.
Defective relay contacts or associated wiring.	Report condition to direct support maintenance.

3-42. Elevator Settles Before Locking Bars are Fully Engaged

Probable cause	Possible remedy
Locking bar limit switches are operating too soon.	Adjust switches to operate when locking bars are fully engaged (par. 3-96).

3-43. Locking Bars Engage But Elevator Does Not Settle or Settles Very Slowly

Probable cause	Possible remedy
All limit switches that indicate engaged position of locking bars did not operate.	Adjust switches so they operate when locking bars are fully engaged (par. 3-96).
Leveling valve S3 not operating properly.	Adjust valve (par. 3-106 or 3-109) depending on power unit concerned). If adjustment does not correct problem, report condition to direct support maintenance.
4CR relay contacts or associated wiring defective.	Report condition to direct support maintenance.

3-44. No Response When DOWN Button is Pressed At Master Control Station or at Elevator Control Station

Probable cause	Possible remedy
Lower limit switch 18LS is operated or stuck in the operated position.	Operate the switch manually to see that it works freely. Lubricate in accordance with current lubrication order and adjust if necessary (par. 3-97).
Upper limit switch 17LS is operated.	Operate the switch manually to determine that it works freely. Lubricate in accordance with current lubrication order and adjust switch to enable it to return to the unoperated position when the elevator is resting on the locking bars (par. 3-99).

3-45. Number 1 Motor Starts and Shifts To RUN But Number 1 Pump Continues To Bypass When Elevator Is On Locking Bars

Probable cause	Possible remedy
Solenoid valve SA1 closing too slowly or not at all.	Adjust No. 1 pump solenoid valve SA1 (par. 3-105 or 3-110) depending on the power unit used.
Faulty solenoid valves, circuit relays, relay contacts, or associated wiring.	Report condition to direct support maintenance.
Mechanical failure in solenoid valve SA1.	Report condition to direct support maintenance.

3-46. Elevator Rises Above Locking Bars But Bars Do Not Retract

Probable cause	Possible remedy
Hand valves at locking bar 4-way valve closed.	See that shutoff valves to locking bar cylinders are wide open.
Failure of locking bar 4-way valve, circuit relays, relay contacts, or associated wiring.	Report condition to direct support maintenance.

3-47. Elevator Platform Rises Above Locking Bars, Bars Retract But Elevator Platform Does Not Lower

Probable cause	Possible remedy
All locking bar limit switches that indicate retracted position did not operate.	Adjust switches to operate when locking bar is fully retracted (par. 3-95).
Faulty circuit relay, relay contacts, or associated wiring.	Report condition to direct support maintenance.
Mechanical or hydraulic failure.	Report condition to direct support maintenance.

3-48. Elevator Platform Lowers Very Slowly

Probable cause	Possible remedy
Lowering valve not opening or opening wide enough.	Adjust lowering and leveling valve (pars. 3-106, 3-107, or 3-108, 3-109) according to power unit used.
Mechanical or electrical failure in the lowering valve.	Report condition to direct support maintenance.

3-49. Elevator Platform Lowers Rapidly and Does Not Slow Down When Approaching Pedestals

Probable cause	Possible remedy
Lowering valve S4 closing too slowly.	Adjust valve (par. 3-107 or 3-108) according to power unit used.
Lower limit switch 18LS not operating when elevator nears pedestals.	Adjust switch to operate when contacted by the elevator mounted cam (par. 3-97).
Failure of S4 valve control relays or contacts.	Report condition to direct support maintenance.

3-50. Elevator Platform Lowers Normally Until Leveling Zone is Reached; Then Stops

Probable cause	Possible remedy
Leveling valve S3 not operating.	Adjust valve (par. 3-106 or 3-109) depending on the power unit employed.
Defective leveling valve	Report condition to direct support maintenance.

3-51. Elevator Platform Will Not Level To Magazine Floor When Stop Button is Momentarily Pressed in Floor Leveling Zone (NIKE HERCULES)

Probable cause	Possible remedy
Leveling limit switch is not being operated in leveling zone.	Adjust switch to operate in the floor leveling zone and to stop the elevator or platform flush with magazine floor (par. 3-97).
Lowering valve S4 closing too slowly.	Adjust valve (par. 3-107 or 3-108) depending on power unit employed.

3-52. Elevator Platform Travels Over 6 Inches Before Coming To Halt When Stop Button is Pressed

Probable cause	Possible remedy
Lowering and leveling valves closing too slowly.	Adjust valves (pars. 3-106, 3-107, 3-108, 3-109) as applicable to the power unit employed.

3-53. Elevator Platform Rises When DOWN Button is Pressed. Elevator Platform is Below Locking Bars

Probable cause	Possible remedy
One or more of locking bars not fully retracted.	Bleed locking bar hydraulic system (par. 3-125).
Locking bar extended, caused by failure in locking cylinder.	Report condition to direct support maintenance.

3-54. No Response When DOORS OPEN Button Is Pressed (1CR and 1 TR Relays Do Not Pick Up)

Probable cause	Possible remedy
Selector switch or associated wiring defective.	Check continuity through switch and wiring terminals in control relay cabinet (Selector switch in MASTER position).
Circuit through pushbuttons is faulty.	Check continuity as follows: Terminals 15 to 7 (OPEN button). (Button must be pressed for this test). Terminals 7 to 10 (CLOSE button). Terminals 3L2 to 14 (master STOP). Terminals 14 to 29 (Elevator STOP).

Probable cause	Possible remedy
5LS1 and 6LS1 contacts open or wiring faulty in switches.	Check continuity through terminals 10 to 38 in control relay cabinet.
Coil or 1CR burnt out or has broken leads.	Check continuity through terminals 38 to 29 (disconnect coil at terminal 38 for this test).

3-55. Warning Bell Rings But Number 1 Motor Does Not Start When DOORS OPEN Button Is Pressed

Probable cause	Possible remedy
Circuit through upper limit switch 17LS open.	Operate switch manually to be sure that it works freely. Lubricate in accordance with current lubrication order and adjust if necessary (par. 3-99).
Motor Number 1 overload relay has tripped.	Reset relays by pressing reset button on outside of motor starter cabinet.
Defective circuit relay, relay contacts, or associated wiring.	Report condition to direct support maintenance.

3-56. Warning Bell Does Not Ring Before or During Door Opening

Probable cause	Possible remedy
Clapper on bell binding	Free clapper.
1 TR 1 contacts not closing.	Disconnect lines 48 and 49 at 1 TR and check continuity through the switch with relay energized.
Wiring on primary of bell transformer open.	Check continuity through the primary at terminals 200 to 201.
Wiring on secondary of bell transformer open.	Check continuity through the secondary at leads marked X.
Transformer grounded at primary or secondary.	With transformer disconnected, check resistance from leads to ground.

3-57. Warning Bell Starts Ringing After Doors Begin Opening

Probable cause	Possible remedy
Clapper on bell binding	Free clapper.
Linkage on 1TR1 out of adjustment.	Adjust 1TR1 operating linkage.

3-58. Warning Bell Continues Ringing After Doors are Fully Open and Number 1 Motor Stops

Probable cause	Possible remedy
1TR1 contacts did not open when 1TR was de-energized.	Adjust 1TR1 operating linkage.
Defective circuit	Disconnect lines 48 and 49 at 1TR and check continuity through the switch.

3-59. Number 1 Motor Starts and Shifts To Full Line Voltage, But Number 1 Pump Continues To Bypass

Probable cause	Possible remedy
Timing relay 1TR out of adjustment.	Adjust relay to allow doors to begin opening 5 seconds after DOORS OPEN button is pressed (par. 3-92).
Pump bypass valve not closing or closing too slowly.	Adjust Number 1 pump bypass valve (par. 3-105 or 3-110) according to power unit employed.
Defective solenoid valve, circuit relay, contacts, or wiring.	Report condition to direct support maintenance.

3-60. When Number 1 Motor Shifts To Full Line Voltage, Pressure Relief Valve Opens and Continues To Chatter. Doors Do Not Open

Probable cause	Possible remedy
Manually operated valves closed.	See that manual valves in the hydraulic lines to the door cylinders are wide open.
Defective 4-way valve, solenoids, or associated wiring.	Report condition to direct support maintenance.

3-61. Elevator Platform Rises When DOORS OPEN Button Is Pressed

Probable cause	Possible remedy
Defective solenoid in elevator shutoff valve S6.	Report condition to direct support maintenance.
Defective solenoid valve S6.	Report condition to direct support maintenance.

3-62. Doors Will Not Open Properly: One of Operating Linkages Will Not Break Over Center

Probable cause	Possible remedy
Flow control valves out of adjustment.	See that both flow control valves on same door are set the same (par. 3-126).
Air in the door system	Bleed all door cylinders at both the head and rod ends (par. 3-125).
Defective door cylinder	Report condition to direct support maintenance.

3-63. Number 1 Motor Continues To Run When Doors Reach Fully Open Position

Probable cause	Possible remedy
Door open limit switch 5LS or 6LS did not operate.	Adjust both switches to operate when doors are fully open (par. 3-93).
Faulty circuit relay, contacts, or associated wiring.	Report condition to direct support maintenance.

3-64. Doors Stop Before They Reach Fully Open Position

Probable cause	Possible remedy
Door open limit switches 5LS and 6LS operated prematurely.	Adjust both switches to operate when doors are fully open (par. 3-93).
Limit switches 5LS and 6LS defective.	Report condition to direct support maintenance.

3-65. Doors Begin To Open As Soon As Number 1 Motor Shifts To Full Line Voltage Without Usual 5-Second Warning Delay Period

Probable cause	Possible remedy
Timing relay 1TR out of adjustment.	Adjust relay to allow 5-second delay before doors begin opening (par. 3-92).
Failure of timing relay or component.	Report condition to direct support maintenance.

3-66. Warning Bell Continues Ringing After Doors Are Completely Open and Equipment Comes To Rest

Probable cause	Possible remedy
Timing relay microswitch defective.	Report condition to direct support maintenance.
Timing relay defective	Report condition to direct support maintenance.

3-67. No Response when DOORS CLOSE Button Is Pressed

Probable cause	Possible remedy
Doors interlock limit switch 22LS, or launcher limit switch not operated.	Operate switches manually to be sure they work freely. Lubricate in accordance with current lubrication order and adjust as necessary (par. 3-100).
Elevator not resting on pedestal jacks or number 2 pressure switch faulty (B-4 and B-5 elevators only).	Lower elevator so it rests on the jacks. If doors still will not open, report to direct support maintenance.
Selector switch faulty	Check continuity through terminals 11 to 15 in control relay cabinet. (Selector switch in MASTER position). Report defective switch to direct support maintenance.
Circuit through push button is faulty.	Check continuity through terminals 11 to 8 (with DOORS CLOSE button pressed) and the normally closed contacts of terminals 8 and 9.
Circuit through STOP button is open.	Push STOP button and listen for relays 4CR and 10CR to pick up when button is released. If relays do not pick up, check for continuity through terminals 14 to 29 and 3LS to 29 in control relay cabinet.
1LS and 2LS in operated position or circuit faulty through these switches.	Check continuity through 1LS and 2LS, terminals 23 to 39 in relay cabinet.
Coil or 2CR burned out or has broken leads.	Check continuity through 2CR coil.
Circuit not complete through 22LS1.	Check continuity through 9 to 23 in control relay cabinet.

3-68. Motor Starts and Shifts To 100% Line Voltage But Number 1 Pump Continues To Bypass. Pressure Relief Valve Does Not Open

Probable cause	Possible remedy
Bypass valve SB not closing properly (NE-5007 power units).	Adjust valve (par. 3-103).

Probable cause	Possible remedy
SA1 valve does not close or fails to hold pressure (not applicable to NE-5007 power units).	Adjust valve (par. 3-110).
Mechanical or electrical failure in one of solenoid valves.	Report condition to direct support maintenance.

3-69. Pressure Relief Valve Opens and Continues To Chatter. Doors Do Not Close or Close Very Slowly

Probable cause	Possible remedy
Door shutoff valve S5 not opening wide enough (NE-5007 power units only).	Adjust valve (par. 3-104).
Faulty 4-way valve, component, circuit relay, or associated wiring.	Report condition to direct support maintenance.

3-70. Doors Close and Equipment Comes To Rest But One Door Linkage Does Not Lock Over Center

Probable cause	Possible remedy
Weather seal between doors not fastened tightly.	Tighten all seal mounting bolts. Replace any missing or defective bolts.
Door flow control valves not properly adjusted.	Adjust valves (par. 3-126), making sure both flow control valves on same door are set the same.
Air in door cylinders	Bleed all cylinders at both head and rod ends (par. 3-125).

3-71. Doors Close But Number 1 Motor Continues To Run After Operating Linkages Are Locked Over Center

Probable cause	Possible remedy
Door closed limit switches 1LS or 2LS did not operate.	Adjust switches to operate when doors reach fully closed position (par. 3-94).
Lines 9 or 23 grounded	Disconnect wires 9 and 23. Make resistance test from wires to ground.

3-72. Doors Open Completely and Elevator Platform Begins To Rise, Pressure Relief Valve On Number 1 Pump Opens and Continues To Chatter

Probable cause	Possible remedy
S6 valve defective	Report condition to direct support maintenance.
Swing check valve sticking closed.	Report condition to direct support maintenance.
Faulty or grounded coil on S6 valve.	Report condition to direct support maintenance.

3-73. When Doors Reach Fully Open Position, Number 1 Motor Stops An Instant, Then Starts Again

Probable cause	Possible remedy
2TR1 contacts not holding number 1 motor circuit energized between time 1CR drops out and 3CR picks up.	Adjust 2TR1 operating linkage (par. 3-89).
Faulty 2TR coil	Check continuity through 2TR coil.
7CR6 contacts not closed	Check for continuity across 7CR6 contacts (circuit energized) terminals 62 and 93. Voltage at these terminals indicates open contacts.

3-74. Launcher Begins Erecting Before Doors are Completely Open

Probable cause	Possible remedy
Launcher interlock with doors wired incorrectly.	Check that the following connections correspond: terminal 30 and Douglas conductor 1087D, termina. 31 and Douglas conductor 1088B.

3-75. Launcher Does Not Stop Erecting When Stop Button is Pressed and Held

Probable cause	Possible remedy
Launcher interlock with doors wires incorrectly.	Check that the following connections correspond: terminal 30 and Douglas conductor 1087D, terminal 31 and Douglas conductor 1088B.
Short circuit in wiring between launcher and elevator control cabinet.	Disconnect wiring to launcher at elevator control cabinet.
10CR contacts not opening when circuit relay is deenergized.	Disconnect wries at terminals 30 and 31. Check continuity at these terminals. (No continuity should be indicated at these points.)

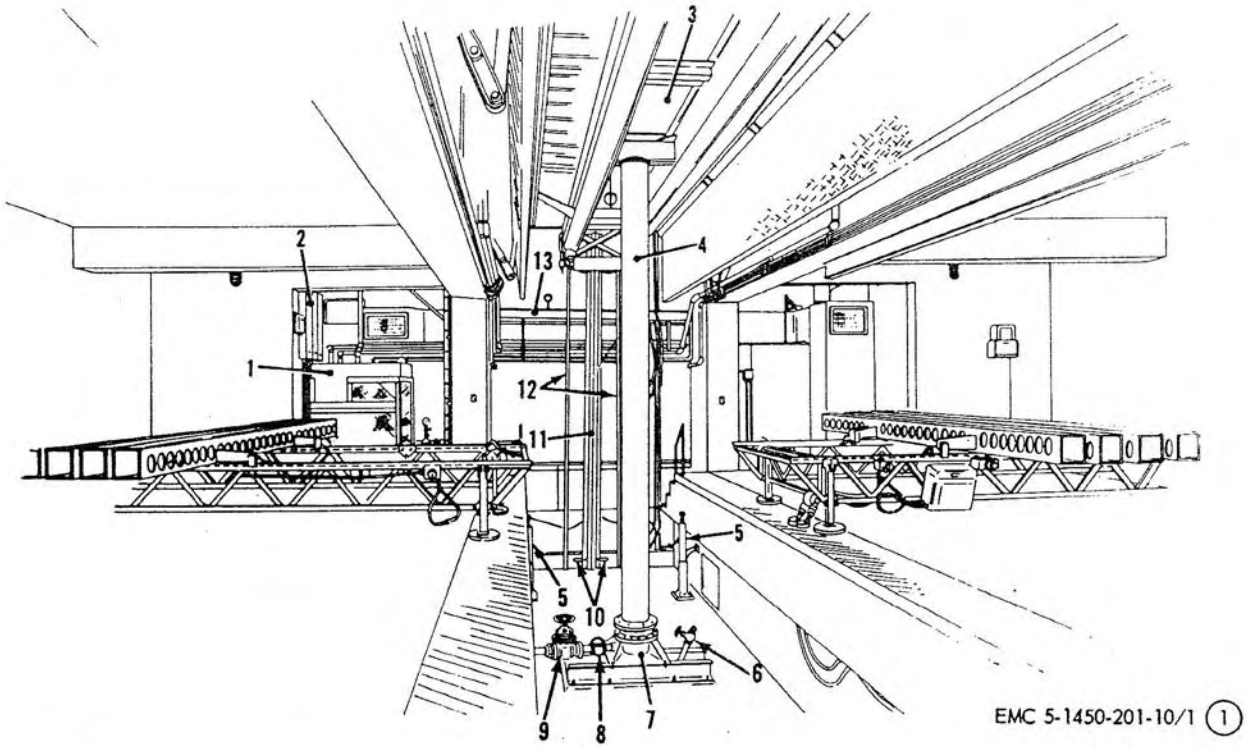

1 Hydraulic power unit
2 Electric controller
3 Elevator
4 Hydraulic cylinder plunger
5 Pedestal leveling jack
6 Flushing valve
7 Main cylinder
8 Check valve
9 3-inch gate valve
10 Guide rail inserts
11 Guide rail
12 Wire rope tie angle
13 Guide rail support I-Beam

Figure 1-1 (1). Component locations.

in the power unit are a hydraulic fluid reservoir (17), manually and solenoid actuated valves, and two liquid sight gages (16 and 18).

c. Elevator Assembly. The elevator assembly consists of a platform (9, fig 1-3) which is raised and lowered by a hydraulic plunger (10) and cylinder assembly (11). When this assembly is raised, locking bars (7) engage bolsters on the platform chassis to provide rigid support for missile launching. Pedestals are provided in the pit for the purpose of keeping the platform flush with the magazine floor level.

d. Elevator Doors. The doors (18, fig. 1-1) are hinged at ground level. When closed, they completely shut off the underground magazine from the outside area. They open downward to vertical positions to provide elevator platform clearance.

e. Purpose. The purpose of the equipment is to provide an efficient, precision controlled mechanical means of moving Nike missiles from an underground magazine to a firing position above the ground. The elevator platform is especially reinforced to serve as a launching pad. A power unit supplies hydraulic pressure to operate the equipment. Its pressure is used to open and close the elevator doors, to operate the elevator locking bars, and to raise and lower the elveator assembly. The power unit and all hydraulic lines, cylinders, valves, and controls, are located within the underground, reinforced, concrete inclosure. The elevator control station emerges with the elevator when raised.

f. Hydraulic Accessory Equipment. The hydraulic accessory equipment includes four double-acting hydraulic cylinders (4, fig. 1-3),

3-76. No Response When Launcher Elevation Switch is Moved To UP Position

Probable cause	Possible remedy
Open contacts in control circuit.	See that the following is accomplished: Selector switch at master control station is on CONSOLE. 400 cycle power supply is *ON*. DC power to launcher is *ON*. Launcher rail limit switches are closed (2 switches).

3-77. Doors Begin Closing Before Launcher Reaches Horizontal Position

Probable cause	Possible remedy
Jumper wire between launcher limit switch terminals in control relay cabinet not removed subsequent to launcher installation.	Remove jumper wire, terminals 44 and 44A (NE-5007 power units) (Terminals 44A and 69, NE-5000, NE-50009, and NE-50010 units).
Launcher limit switch connected incorrectly in relay control cabinet.	Check Douglas publications for correct wiring to elevator control station.
Launcher limit switch stuck in operated posistion.	Correct deficiency and lubricate in accordance with current lubrication order.

3-78. Launcher Does Not Stop Lowering When Stop Button is Pressed and Held

Probable cause	Possible remedy
Launcher interlock with doors wired incorrectly.	Check that the following connections correspond: Terminal 30 and Douglas conductor 1087D, terminal 31 and Douglas conductor 1088B.
Short circuit in wiring between launcher and elevator control cabinet.	Disconnect wiring to launcher at elevator control cabinet. Check out wiring and replace if faulty.
10CR contacts not opening when circuit relay is deenergized.	Defective wires at terminals 30 and 31. Check continuity at these terminals. (No continuity should be indicated.)
Elevator valve S6 opening too slowly (NE-5007 power unit only).	Adjust S6 valve (par. 3-102).
S6 valve defective	Report condition to direct support maintenance.

Note. All malfunctions listed in DOORS OPEN and ELEVATOR UP charts apply to CONSOLE UP operation. The few malfunctions listed here are peculiar to CONSOLE operation along where the coupling of the two operations automatically occurs.

3-79. When Doors Reach Fully Open Position, Number 1 Motor Stops an Instant, Then Starts Again

Probable cause	Possible remedy
Faulty timing relay microswitch or associated wiring.	Report condition to direct support maintenance.

3-80. Elevator Rises Above Locking Bars, Bars Engage, Elevator Levels. As Soon As it Touches Bars, it Rises Again, Reaches Top of Its Stroke and Again Levels. This Continues Until Launcher Reaches Fully Erected Position

Probable cause	Possible remedy
2TR1 contacts are not operating when 2TR is deenergized.	Report condition to direct support maintenance.

3-81. Launcher Begins Erecting Before Doors Are Completely Open

Probable cause	Possible remedy
Launcher interlock with doors wired incorreclty.	Report condition to direct support maintenance.

3-82. Launcher Does Not Stop Erecting When STOP Button is Pressed and Held

Probable cause	Possible remedy
Launcher interlock with doors wired incorrectly.	Report condition to direct support maintenance.

3-83. No Response When Launcher Elevation Switch is Moved to UP Position

Probable cause	Possible remedy
Open contacts	See that the following is accomplished: Selector switch at Master station is on CONSOLE. 400 cycle power supply is ON. DC power to Launcher rail limit switches are closed (2 switches)

Probable cause	Possible remedy
Selector switch or associated wiring defective.	Report condition to direct support maintenance.

3-84. Elevator Rises Off Locking Bars, Locking Bars Retract and Elevator Lowers, But Number 1 Motor Stops an Instant as Elevator Nears Pedestals, Then Starts Again

Probable cause	Possible remedy
18LS was contacted before 21LS was operated.	Adjust 21LS to operate before 18LS operates when elevator is lowering (par. 3-100).

Note. All malfunctions in ELEVATOR DOWN AND DOORS CLOSE apply to CONSOLE DOWN operation. The few malfunctions listed here are peculiar to CONSOLE operation alone where coupling two operations occur automatically.

3-85. Doors Begin Closing Before Launcher Reaches Horizontal Position

Probable cause	Possible remedy
Launcher limit switch or associated wiring faulty.	Report condition to direct support maintenance.

3-86. Launcher Does Not Stop When STOP Button is Pressed and Held

Probable cause	Possible remedy
Launcher interlock with doors wired incorrectly.	Report condition to direct support maintenance.

Section V. ELECTRICAL SYSTEM

3-87. General

a. General. Electrical power for operation of this special purpose elevator system is distributed at two voltages: 416-volt, 3 phase, 60 cycle alternating current for operation of motors number 1 and 2; and 115-volt single-phase, 60-cycle alternating current for operation of the control circuits. Electrical components include the main power switch, control voltage transformer, control relays, timing relays, motors and motor starters, control stations, limit switches, and solenoid valves.

b. Service Entrance Panels. The first appearance of electric power in the installation is a 4-wire, 3-phase, 416-volt line entering the main power switch panel

c. Main Power Switch. When turned to ON this switch energizes the electrical system by sending 416 volts to the control voltage transformer and to the stationary contacts in both motor starter cabinets.

d. Motors. Two electric motors are installed in the power unit to drive the pumps. Motor always operates whenever any hydraulic component of the equipment is being used. Motor number 2 operates only when the elevator is being raised.

e. Motor Starters. Two motor starters are incorporated in the system to energize motors numbers 1 and 2. These starters are of the reduced voltage type, to avoid imposing excessive loads on the electrical power supply during motor starting.

f. Control Voltage Transformer. This unit feeds 115 volts to the control relays in the control relay cabinet.

g. Control Stations. Two control stations which are actuated by the operator also receive low-voltage power when the voltage power switch is on. The control stations energize the appropriate starter and control relays, thus setting the equipment in operation.

h. Motor Sequence Timing Relay. When the elevator UP button is pressed at one of the control stations, five starting contactors in the motor number 1 starting cabinet are closed. When the contactor is closed, 416 volts are applied to the auto transformer, from which approximately 270 volts are obtained to start motor number 1. When 2 seconds have elapsed, a timing relay acts to close three contactors which apply full 416 volt line power to the motor. The action of this timing relay also simultaneously opens the first starter contactors by means of a positive mechanical linkage between the starting and running contactor sections.

i. Timing Relay for Elevator Operation. In addition to starting motor number 1, when the elevator UP button is used, the timing relay for motor number 2 is started. When 2 seconds have elapsed, this starter sequences itself in

the same manner as motor number 1 starter to operate motor number 2.

j. Timing Relay for Doors When the DOORS OPEN button is pressed, motor number 1 starter is actuated, and a timing relay is started which causes a warning bell above ground to ring. This relay provides a warning delay of 5 seconds before the doors open, by preventing pump number 1 bypass valve from closing during the warning delay period.

k. Control Relay. Ten control relays, mounted in the control relay cabinet are used to control and sequence the operation of the equipment. They, in turn, are limited in operation by the limit switches.

l. Limit Switches. A system of limit switches is incorporated in the equipment. They are responsible for many of the automatic reactions of the equipment. These switches control functions of the locking bars, doors, and the elevator. They also sequence performance and guard against undesirable or dangerous operation (table 1-2).

(1) Locking bar limit switches are essentially interlocking devices which half or limit movement of the locking bars. Limit switches 3LS, 4LS, 13LS, 14LS, 15LS, and 16LS half rearward movement and limit switches 7LS, 8LS, 9LS, 10LS, 11LS, and 12LS, half the forward or ENGAGE position. These switches actuate appropriate control relays and solenoid valves to accomplish their control functions. Locking bars are fully extended when they engage the chassis bolsters completely. They are fully retracted when they are against the vertical mounting plate.

(2) Door limit switches limit door movement by energizing appropriate solenoid valves and relays. Opening is halted by limit switches 5LS and 6LS when the limit switch cam on the door engages the switch arm; and closing is halted when the linkage actuates the arm of the limit switches 1LS and 2LS. Doors are fully open when they are at rest against the door stops, vertical, and with limit switch actuated. They are fully closed when they are sealed at ground level and when the lower member of the cylinder linkage is at rest against the stop frame, cylinder fully retracted.

(3) Six elevator limit switches perform control functions on elevator action by energizing or deenergizing power unit components and by serving as interlock devices. Limit switch 17LS halts upward movement of the platform by stopping the power unit motor number 1. Limit switch 19LS slows hoist speed for slow ground level platform approach by stopping motor number 2. Limit switch 18LS reduces lowering speed as platform approaches the leveling jacks. Limit switch 21LS prevents elevator platform from rising above magazine floor level when the doors are closed by breaking the power unit control circuit and must be actuated before the doors can close. Limit switch 20LS closes the solenoid lowering valve for slow leveling actions at floor height.

(4) Pressure switches are used in conjunction with the limit switches to control elevator functions at travel extremities where system pressure would be a more positive sensing device than limit switch location.

m. Solenoid Valves. Solenoids are accessory parts designed to provide electrical control of the valves in the power unit. Two of these solenoids form parts of the four-way door operating valve for actuating the doors. Two solenoids are part of the locking bar four-way valve. They actuate this valve to extend or retract the locking bars. Lowering solenoid S4 operates the elevator lowering valve. Shutoff solenoid S6 operates the elevator shutoff. The leveling solenoid S3, operates the leveling valve. Both pumps are equipped with bypass valves controlled by attached solenoids. Solenoid doors bypass S3 controls the door bypass valve in power units 50009 and 50010 only. These solenoids are operated by relay in the control cabinet and by the system's limit switches on locking bars and door hinge assemblies.

3-88. Arc Shields

a. Removal.

(1) Turn main power switch OFF.

(2) Open each of the two starter cabinets (1, 3, fig. 3-4) by loosening six bolts (28) from each door.

(3) Slide each of 12 arc shields (24) upward to remove for replacement or contact inspection.

Caution: **Arc shields are made from ceramic material and will break if not handled carefully.**

b. Cleaning and Inspection.

(1) Clean arc shields with a stiff wire brush.

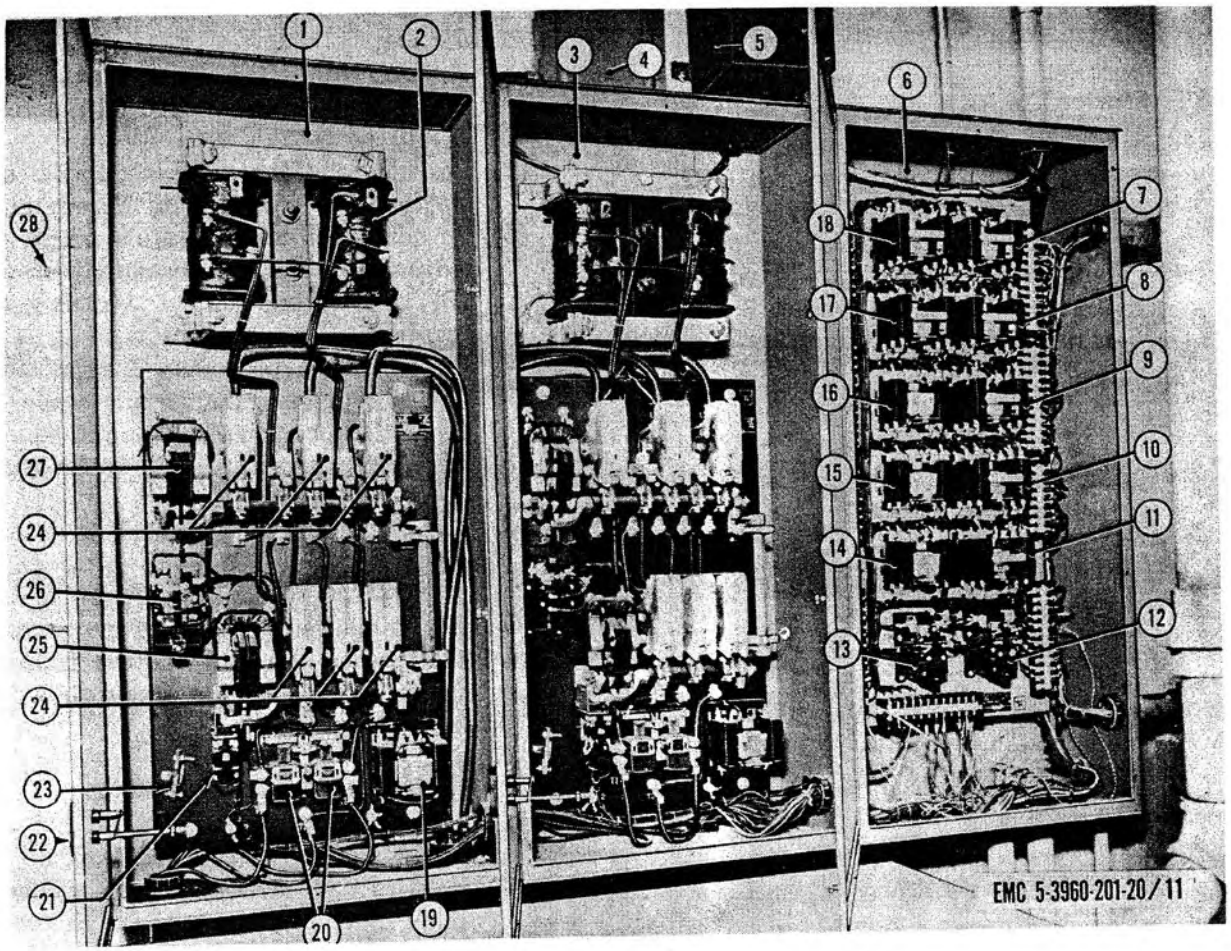

1 Motor number 2 starter cabinet
2 Auto transformer
3 Motor number 1 starter cabinet
4 Control voltage power switch box
5 Control voltage transformer
6 Control relay cabinet
7 Control relay 7CR
8 Control relay 8CR
9 Control relay 9CR
10 Control relay 1CR
11 Control relay 2CR
12 Timing relay 2TR
13 Timing relay 1TR
14 Control relay 10CR
15 Control relay 4CR
16 Control relay 6CR
17 Control relay 5CR
18 Control relay 3CR
19 Auxiliary relay AR
20 Overload relay
21 Auxiliary contactor
22 Overload relay reset
23 Automatic reset device
24 Arc shields
25 Motor run contactor assembly
26 Timing relay
27 Motor start contactor assembly
28 Door bolt (12 rqr)

Figure 3-4. Starter and control relay cabinets.

(2) Inspect for cracks, breaks, or other damage. Replace a damaged or defective arc shield.

c *Installation.*

(1) Slide each of the 12 arc shields (24) down over the motor starter contacts.

(2) Close motor starter cabinet doors and tighten the six bolts (28) on each door.

(3) Turn main power switch ON.

3-89. Starter Contacts

a. Removal.

(1) Turn the main power switch OFF.

(2) Loosen six bolts (28, fig. 3-4) and open the two starter cabinet doors.

(3) Remove screw (1, fig. 3-5) which secures the stationary contact (2) to the starter and lift out the contact.

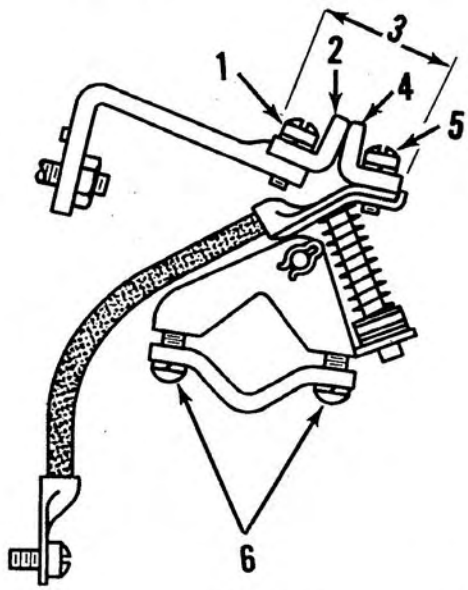

EMC 5-1450-201-20/21

1 Screw fastener for stationary contact
2 Stationary contact
3 1 7/16 in. clearance minimum
4 Moveable contact
5 Screw fastener for moveable contact
6 Moveable contact assembly attaching screws (spec)

Figure 3-5. Motor starter contact.

(4) Remove screw (5) that secures the moveable contact (4) to the starter and remove contact.

(5) Repeat procedure to remove remaining contacts.

b. Cleaning and Inspection.

(1) Clean parts with a lint-free cloth.

(2) Inspect contacts for burned or pitted condition and for a dimension of less than 1 7/16 in. (3, fig. 3-5).

(3) Replace defective or missing parts as necessary.

c. Installation.

(1) Position the moveable contacts (4) on the starter and secure with screw (5).

(2) Position stationary contact (2) on starter and secure with screw (1).

(3) Be sure new contacts aline properly. Adjust position by loosening screws (6) and sliding contact assembly as required.

(4) Repeat above procedure for installation of remaining contacts.

(5) Close starter cabinet doors and secure with six bolts (28, fig. 3-4) for each door.

(6) Turn main power switch ON.

3-90. Trip Cover

a. General. Replace the trip covers in the overload relay when the reset button fails to remain engaged after allowing ample time for the overload heaters to cool.

b. Removal.

(1) Turn main power switch OFF.

(2) Remove screws (8, fig. 3-6) that secure the indicator plate (3).

(3) Remove trip cover (2) from overload relay by sliding it up as far as possible, then pulling it outward.

c. Cleaning, Inspection, and Repair.

(1) Clean with a lint-free cloth.

(2) Inspect for damage and defects and replace defective parts as necessary.

d. Installation.

(1) Position trip cover (2) an overload relay.

(2) Install screw (8) to secure indicator plate.

(3) Recalibrate by setting arrows on trip cover (2) and indicator plate (3) opposite each other at the proper current rating.

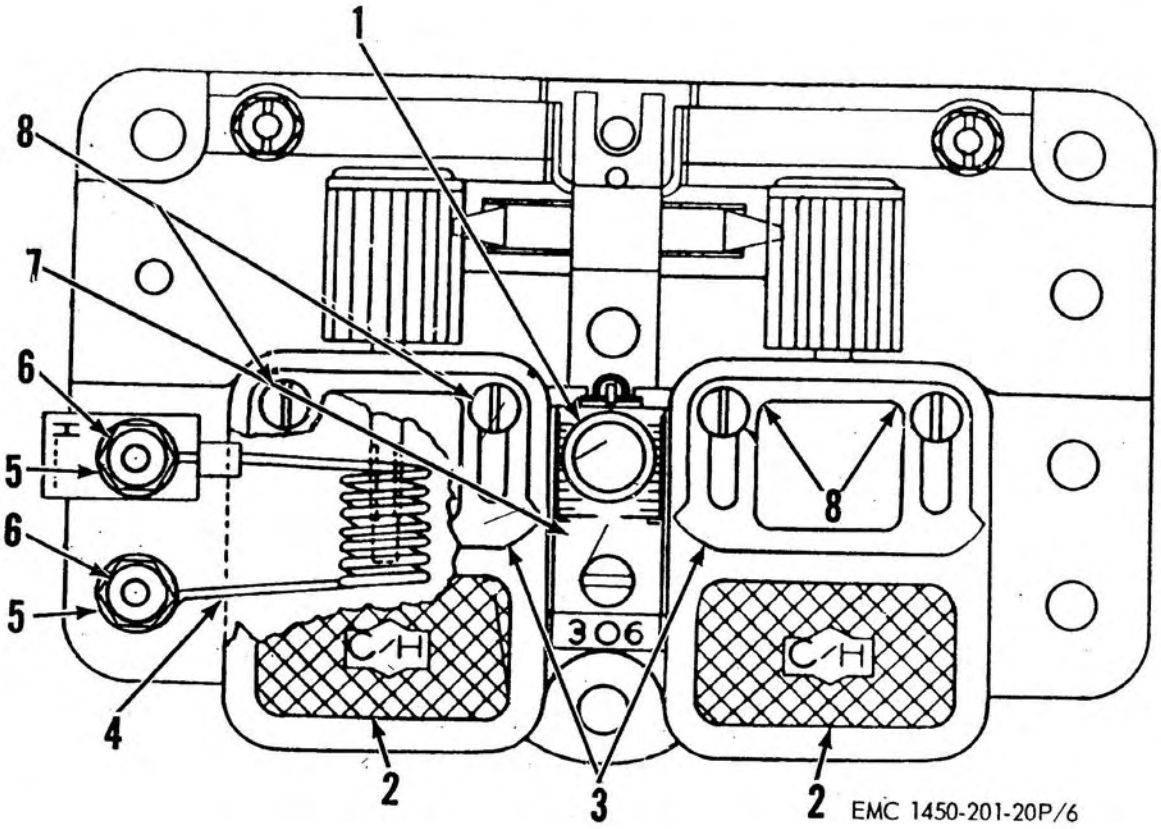

1 Reset button
2 Trip cover
3 Indicator plate
4 Heater coil
5 Washer
6 Terminal nut
7 Calibration plate
8 Indicator plate attaching screw (spec)

Figure 3-6. Overload relay, heater coil replacements.

(4) Turn main power switch ON.

3-91. Heater Coils

a. Removal.

(1) Turn main power switch OFF.

(2) Remove screw (8, fig. 3-6) that secures the indicator plate (3).

(3) Remove trip cover (2) by sliding it up as far as possible and pulling outward

(4) Remove terminal nuts (6), washers (5), and lift out heater coil (4).

b. Cleaning, Inspection, and Repair.

(1) Inspect heater coils for corrosion, and other defects.

(2) Replace a defective coil as necessary.

c. Installation.

(1) Position the heater coil (4) in the overload relay.

(2) Install washer (5) and nut (6) that secure the heater coil to the overload relay.

(3) Fasten celluloid calibration plate (7), if different from that already installed, to front of base. Symbol marking on the plate must agree with that on the coil.

(4) Install indicator plate (3) and secure with screws (8).

(5) Install trip cover (2) on overload relay.

(6) Recalibrate by setting cover and indicator plate arrows opposite each other at the proper currect rating (if it has been necessary to replace the calibration plate).

(7) Turn main power switch ON.

3-92. Timing Relay Adjustment

a. General. Timing relays must be adjusted when it is noted that the time delay is other than the normal lapse. Adjust motor timing relay (26, fig. 3-4) and elevator timing relay (12) for a two-second time delay.

b. Adjustment.

(1) Shorten the time delay by rotating the timing relay adjustment (11, fig. 3-7) at bottom of timing relay (12) counterclockwise.

(2) Lenghten time delay by rotating timing relay adjustment (11) clockwise.

3-93. Doors Open Limit Switch Adjustment

a. General. Limit switches 5LS and 6LS are employed to automatically stop opening action of the doors on the door stops. These switches are mounted on opposite doors and are connected electrically in parallel to allow both doors to completely open before the doors-open circuit is deenergized. Doors open limit switch adjustment is necessary when discontinuance of door opening occurs before the doors come to rest on the door stops, or when the motor continues to run after the doors reach the door stops.

b. Adjustment.

(1) Open doors fully against the door stop pads (8, fig. 3-8).

Note. Open bleeder valves at the rod end of the door cylinders, if necessary, until doors rest on the stops.

(2) Turn the main power switch OFF.

(3) Loosen the two attaching screws on limit switch (2) bracket.

(4) Move limit switch (2) away from its cam until the contacts are heard to close with a distinct click.

(5) Slowly move the switch back toward its cam until the contacts again click. At this point, the limit switch is properly adjusted.

(6) Hold this position and tighten all attaching screws.

(7) Turn main power switch ON.

3-94. Doors Close Limit Switch Adjustment

a. General. Limit switches 1LS and 2LS are employed to automatically stop the closing action of the doors. These limit switches are mounted on opposite doors and are electrically connected in parallel to allow both doors to

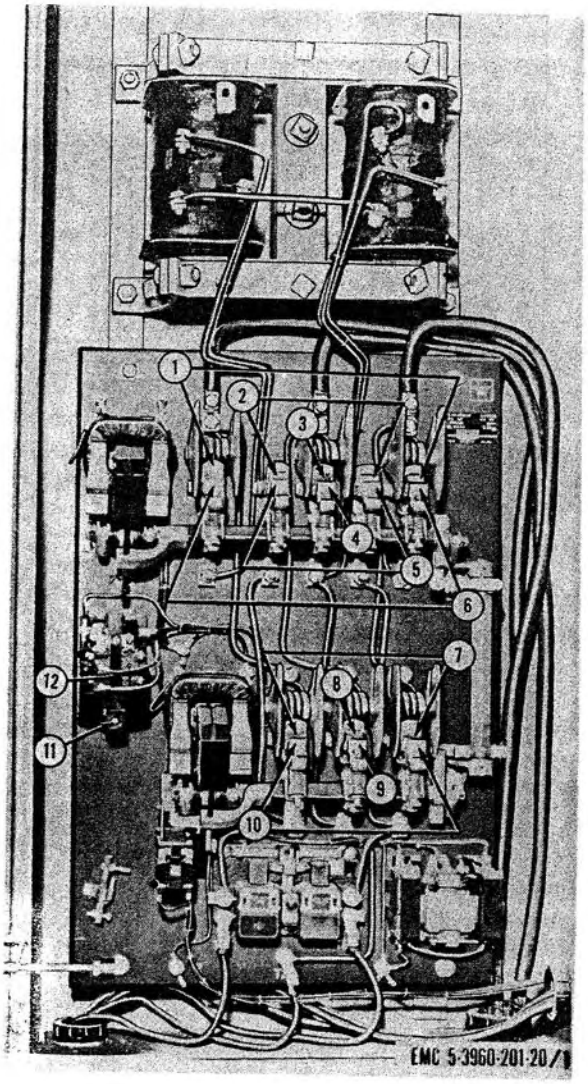

1 Stationary starter contacts
2 Stationary auto transformer primary contacts
3 Stationary contact, common
4 Moveable contact, common
5 Moveable contact, auto transformer primary
6 Moveable starter contacts
7 Stationary contacts, motor run
8 Stationary contacts, common
9 Moveable contact, common
10 Moveable contact, motor run
11 Adjustment, timing relay
12 Timing relay

Figure 3-7. Motor starter cabinets.

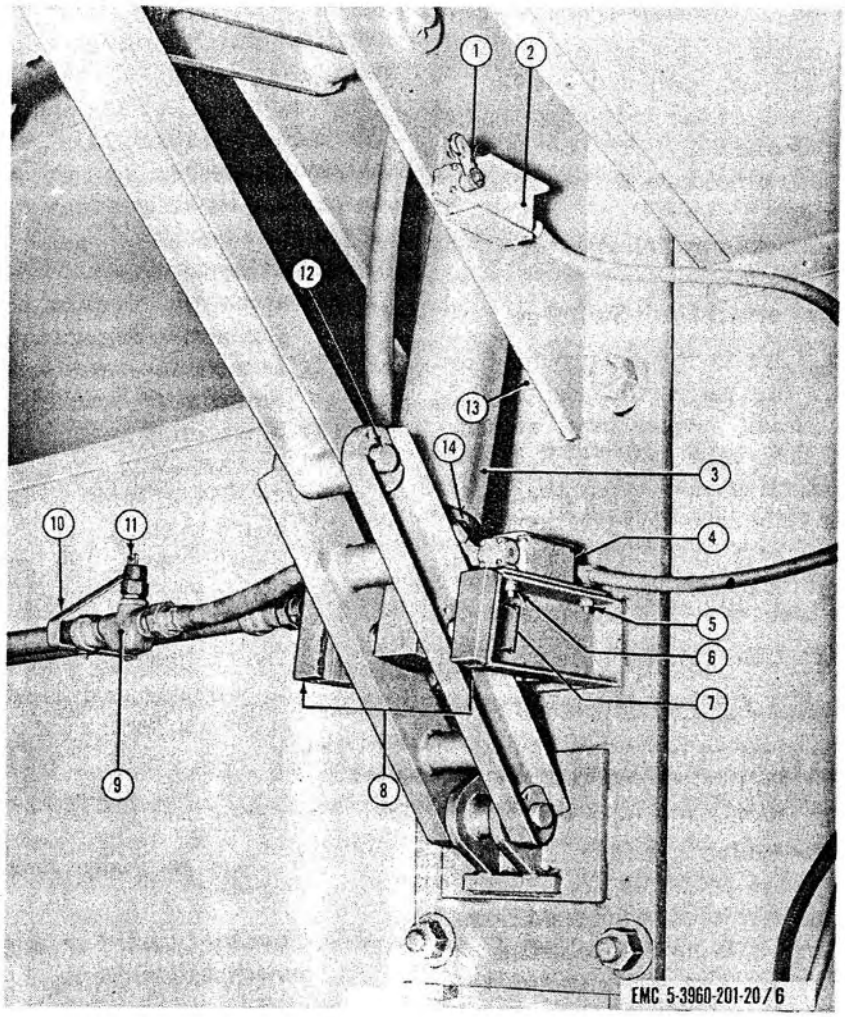

1 Limit switch arm
2 Limit swith 5LS or 6LS
3 Door cylinder
4 Limit switch 1LS or 2LS
5 Limit switch adjusting bolt 3/8–16 × 1 in. (2 rqr)
6 Nut, 3/8–16 (6 rqr)
7 Door hinge stop
8 Door stop pad (2 rqr)
9 Flow control valve
10 Pipe hanger (12 rqr)
11 Lag bolt, 3/8–16 × 2 in. (32 rqr)
12 Cylinder linkage pins
13 Cylinder brackets
14 Door cylinder cushion adjusting screw

Figure 3–8. Door cylinder assembly.

close completely before the circuit is deenergized. Adjustment of limit switches 1LS and 2LS is necessary when discontinuance of door closing occurs before the door reaches a horizontal position, or when the motor continues to run after the doors reach a horizontal position.

b. Adjustment.

(1) Loosen limit switch adjusting bolts (5, fig. 3–8) and adjusting nuts (6) and move limit switch (4) away from the door operating linkage toward the wall.

(2) Close the doors.

Caution: **Stop doors with STOP BUTTON because limit switches will not function in this position.**

(3) Turn main power switch OFF.

(4) Slowly move limit switch (4) back toward door operating linkage until contacts click. At this point the limit switch is properly adjusted.
(5) Tighten limit switch adjusting bolts and nuts (5 and 6).
(6) Repeat this procedure for remaining limit switch.
(7) Turn main power switch ON.

3-95. Locking Bar Retract Limit Switches

a. General. One limit switch is provided to indicate and limit the retracted position of each locking bar. Each retract limit switch, 3LS, 4LS, 13LS, 14LS, 15LS, and 16LS, is activated by its respective cam when the locking bar reaches its fully retracted position. The switch lever arm of these retract limit switches always rides behind its actuating cam.

b. Adjustment.

(1) Fully retract the locking bars making sure the operating linkage (14, fig. 3-9) is locked over center and resting on the pivot casing, before adjusting retract limit switch (6).
(2) To retract the locking bars manually, raise the elevator platform about 3 feet above the pedestals and operate the locking bars retract solenoid manually. This is done by inserting a screwdriver in the opening of the solenoid cover plate at the bottom and pushing firmly upwards.
(3) Loosen the two capscrews holding the limit switch bracket.
(4) Move bracket and limit switch (6, fig. 3-9) away from actuating cam (3) until the limit switch contacts click.
(5) Slowly move the switch (6) and bracket back toward the actuating cam (3) until the contacts click again.
(6) Move the limit switch forward another 1/16 inch and the switch is properly adjusted. Tighten the two screws to secure the bracket.
(7) Repeat the above procedure for the remaining retract limit switches.

Note. All retract limit switches must be adjusted.

3-96. Locking Bar Engage Limit Switches

a. General. One limit switch is provided to indicate and limit the extended position of each locking bar. Each engage limit switch, 7LS, 8LS, 9LS, 10LS, 11LS, and 12LS, is actuated by its respective cam when the locking bar reaches its fully engaged position against the platform bolsters.

b. Adjustment.

(1) Raise the elevator allowing the locking bars to engage the bolsters.
(2) Loosen the two screws holding the limit switch bracket.
(3) Move limit switch (12, fig. 3-9) and bracket away from actuating cam (1) until the limit switch contacts are heard to click.
(4) Slowly move the switch (12) and bracket back toward the cam until the contacts click again, then move the switch back another 1/16 inch and it is properly adjusted. Tighten the screws to secure the bracket.
(5) Repeat above procedure for adjustment of remaining engage limit switches.

Note. All engage limit switches must be adjusted.

3-97. Elevator Lower Leveling Limit Switch Adjustment

a. General. The elevator lower leveling limit switch, 18LS, is used to level the elevator platform when the DOWN button is pressed. When the leveling limit switch, 18LS strikes the leveling cam, the elevator platform will slow down and settle on the pedestals.

b. Adjustment.

(1) Raise the elevator platform until it reaches the ground level and continues to rise for 3 or 4 inches. The elevator platform will then stop and settle back on the locking bars.
(2) Loosen two capscrews (1, fig. 3-10) from the mounting plate (2) and raise or lower the limit switch (5) until the contacts close with a distinct click.
(3) Hold this position and tighten the two screws (1) in the mounting plate (2).

3-98. Elevator Leveling Limit Switch Adjustment

a. General. The elevator leveling limit switch, 20LS, is used to level the elevator platform when the UP button is pressed. The elevator platform starts up at a moderate rate of speed until the limit switch cam strikes the cam mounted at the top of the guide rail. This slows down the elevator platform, which continues up for 3 or 4 inches, levels off, and settles on the locking bars.

b. Adjustment.

(1) Lower the elevator onto the pedestals (par. 2-10)

(2) Loosen the two capscrews in the mounting plate (1, fig. 3-11).

(3) Slide limit switch (8) up or down on the leveling cam until the contacts click.

(4) Hold this position and tighten the screws in the mounting plate (1).

3-99. Slowdown Limit Switch and Upper Limit Switch Adjustment

a. General. When the elevator platform reaches the slow-down limit switch, 19LS, just below the top level, number 2 motor is stopped and number 2 bypass valve is opened, slowing the rate of rise. When the upper limit switch, 17LS, is reached, number 1 motor is stopped, number 1 bypass valve reopens to stop the elevator, and the locking bar 4-way valve is shifted to engage the locking bars.

b. Adjustment.

(1) Raise the elevator platform to the point where cam on elevator platform first strikes the slow-down limit switch, 19LS (4, fig. 3-12).

(2) Loosen the two screws (3) in the mounting plate (12).

(3) Slide the limit switch (4) up or down on the mounting bracket (8) until the contacts close with a distinct click.

(4) Hold this position and tighten the screws (3) in the mounting plate (12).

(5) Repeat the above procedure for upper limit switch 17LS (2).

3-100. Door Zone and Door Interlock Switch Adjustment

a. General. Door zone limit switch 21LS limits elevator platform operation from pedestals to magazine floor level when doors are closed. Interlock limit switch 22LS prevents doors from closing when the elevator platform is above intermediate position. Adjust interlock limit switch 22LS to a dimension of 9 inches between the centerline of door zone limit switch 21LS rollers and door zone cam after door zone limit switch 21LS has been adjusted.

b. Adjustment.

(1) Raise elevator platform about 3 feet off the pedestals and then lower it to a point where it strikes the pedestals and press the STOP button.

(2) Loosen the two screws on the door zone limit switch 21LS (fig. 3-13) mounting plate.

(3) Slide door zone limit switch 21LS up or down on the door zone cam until the contacts can be heard closing with a distinct click.

(4) Hold this position and tighten the screws in the mounting plate.

(5) Repeat the above procedure for the adjustment of the door interlock limit switch 22LS (fig. 3-13).

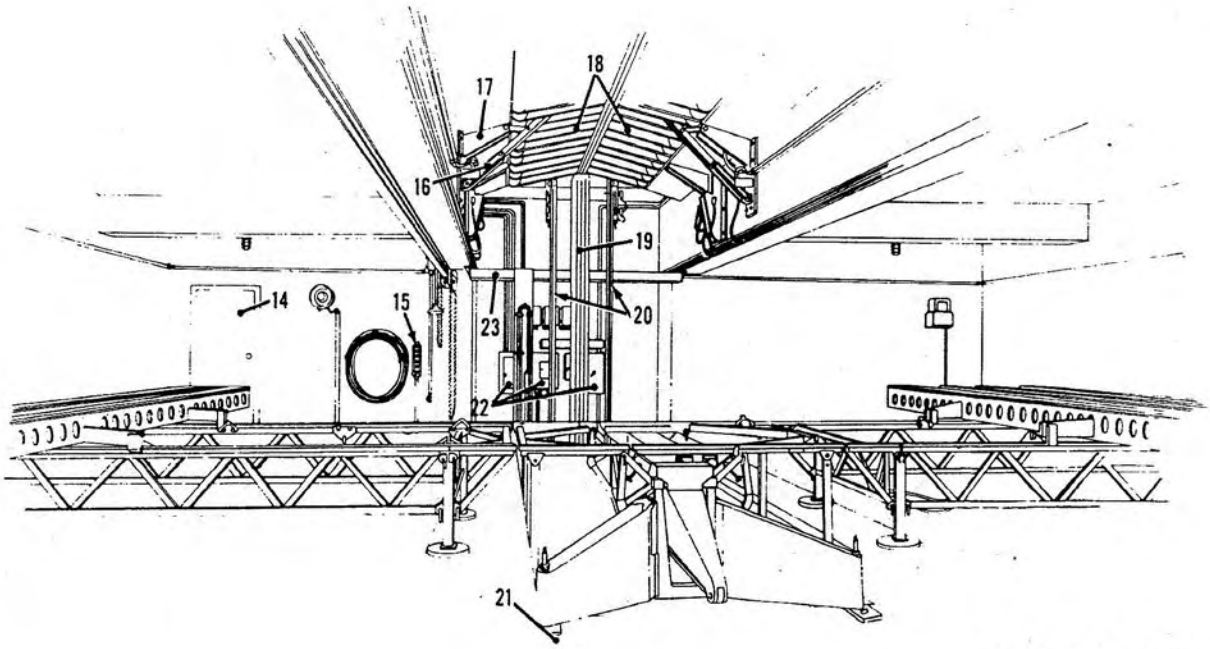

EMC 5-1450-201-10/1 (2)

14 Passageway entrance to console station
15 Master control switchbox
16 Door operating cylinder hinge
17 Plain door hinge
18 Elevator doors
19 Guide rail
20 Wire rope tie angle
21 Elevator
22 Service entrance panels
23 Rail support I-Beam

Figure 1-1 (2). Component locations—Continued.

which operate the two elevator doors. Also included are four double-acting hydraulic cylinders (6), which operate the four locking bars. Four flow-control valves (5), located near the door cylinders in the piping end, control speed of door opening and limit the speed of door closing. Two balancing valves (8) are located in the piping below the doors to synchronize door closing.

1-4. Identification and Tabulated Data

a. Identification. Thirteen identification plates are attached to the major assemblies and components of the special purpose elevators.

(1) The power unit nameplate is located outside of the hydraulic pump frame near the top edge, about six feet above floor level. It indicates the manufacturer, model, and serial numbers, and the year of the manufacture.

(2) The hydraulic pump nameplates are located on the pump bodies. They indicate the manufacturer, model and serial numbers, direction of shaft rotation, and discharge ports.

(3) The electric motor nameplates, within the power unit, provide the manufacturer's name, type, and serial numbers, horsepower, speed, and input ratings.

(4) The door operating cylinder nameplates are located on each cylinder. They identify the manufacturer, and the model and serial numbers.

(5) The locking bar cylinder nameplates give the manufacturer's name, and the serial and model numbers.

(6) An identification plate is mounted on each of the two pressure relief valves in the power units. They specify

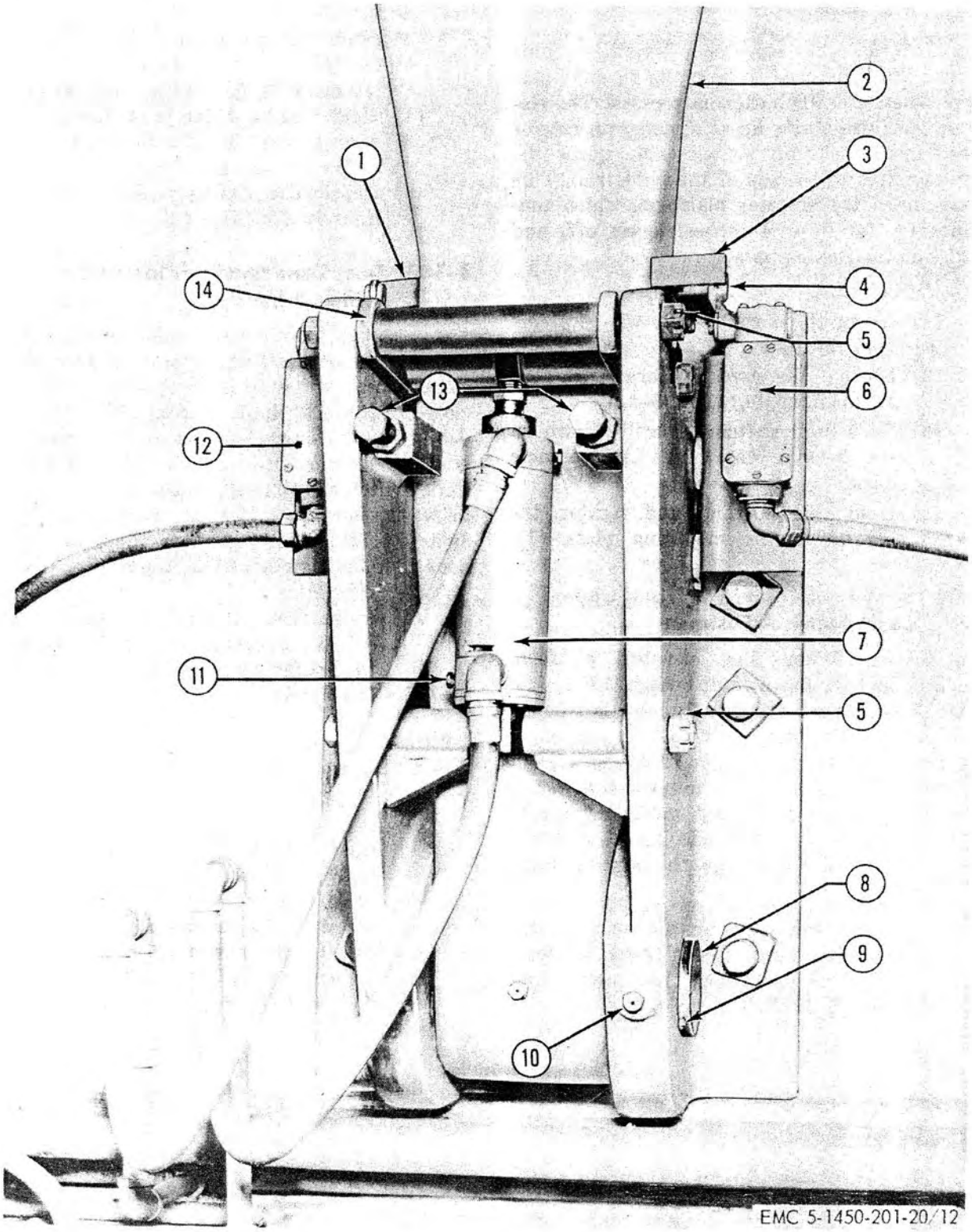

Figure 3-9. Locking bar assembly installed.

1 Actuating cam, locking bar engage limit switch
2 Locking bar, aft end
3 Actuating cam, locking bar retract limit switch
4 Switch lever arm
5 Cotter pin, linkage
6 Locking bar retract limit switch (3LS, 4LS, 13LS, 14LS, 15LS, 16LS)
7 Hydraulic cylinder locking bar
8 Hinge pin, locking bar
9 Cotter pin, hinge pin
10 Lubrication fittings, pivot pin
11 Cylinder bleeders
12 Locking bar engage limit switch (7LS, 8LS, 9LS, 10LS, 11LS, 12LS)
13 Stop, locking bar
14 Linkage

Figure 3-9—Continued.

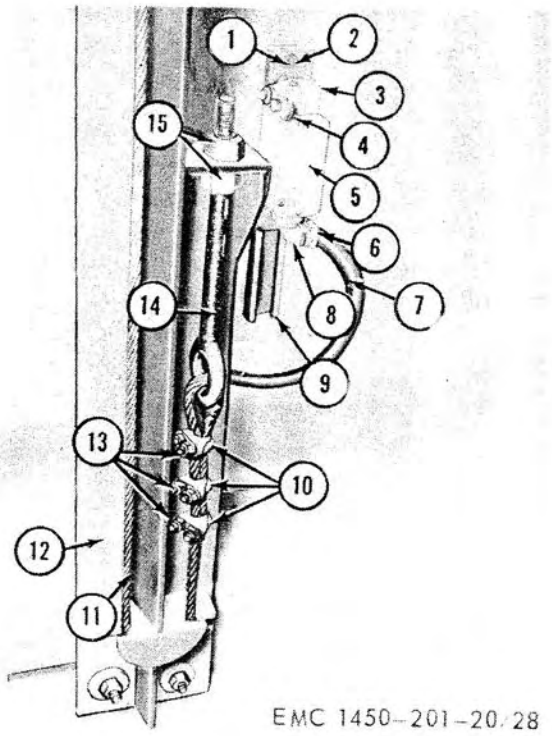

1 Capscrew, 5/16-18 x 7/8 in. (2 rqr)
2 Mounting plate
3 Bearing block
4 Lever assembly
5 Limit switch (18LS)
6 Flexible conduit connector
7 Flexible conduit liquid tight
8 Elbow, conduit 90°, 1/2 in.
9 Limit switch mounting bracket
10 Wire ropes clamp, 1/2 in. (3 rqr)
11 Equalizer wire rope
12 Wire rope tie angle
13 Nut, hex, 3/8-16 (6 rqr)
14 Equalizer adjustment eyebolt
15 Nut, hex, 1-8 (2 rqr)

Figure 3-10. Elevator limit switch 18LS installed.

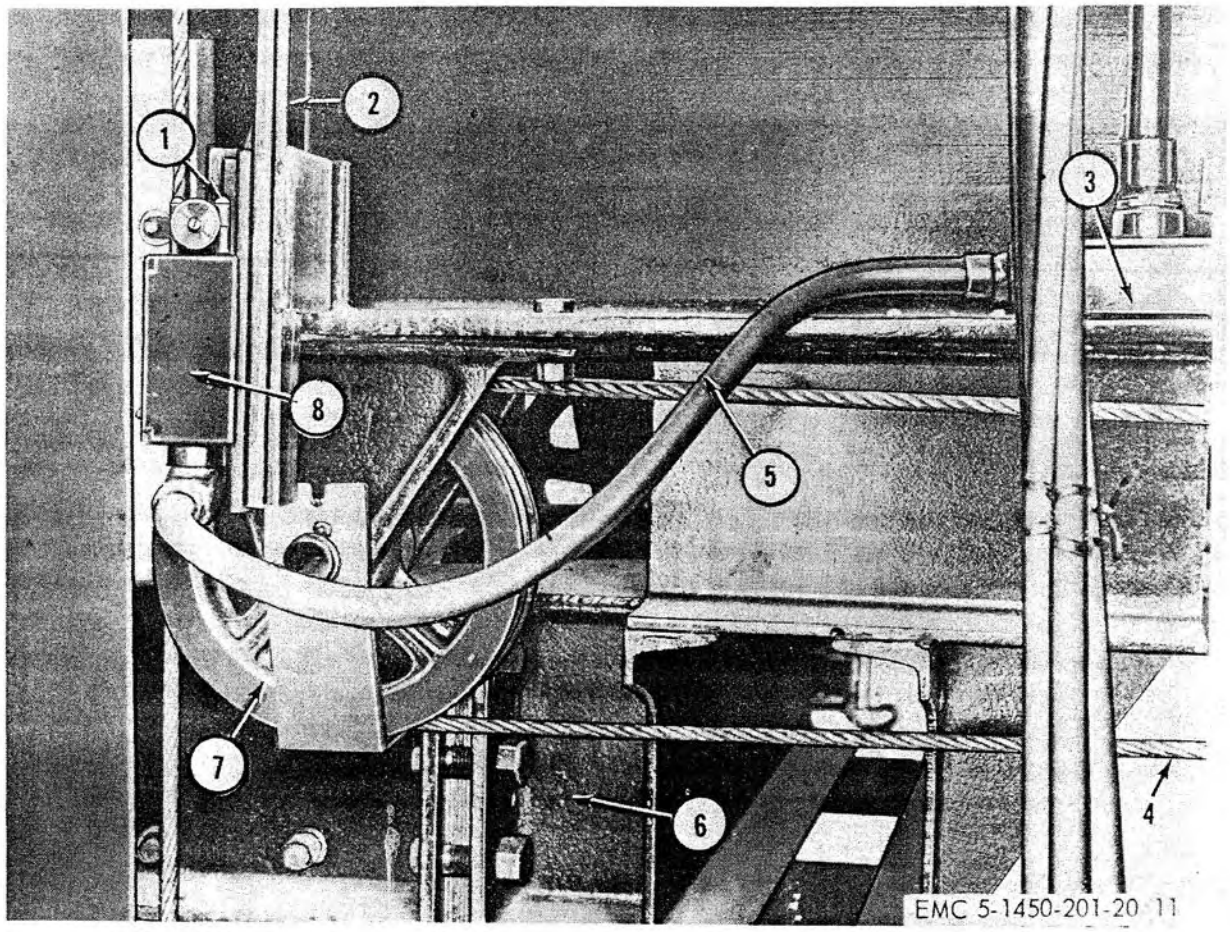

1 Mounting plate
2 Limit switch mounting bracket
3 Junction box
4 Equalizer cable
5 Flexible conduit, liquid tight
6 Elevator chassis frame assembly
7 Equalizer pulley
8 Limit switch, leveling (20LS)

Figure 3-11. Elevator limit switch, 20LS, installed.

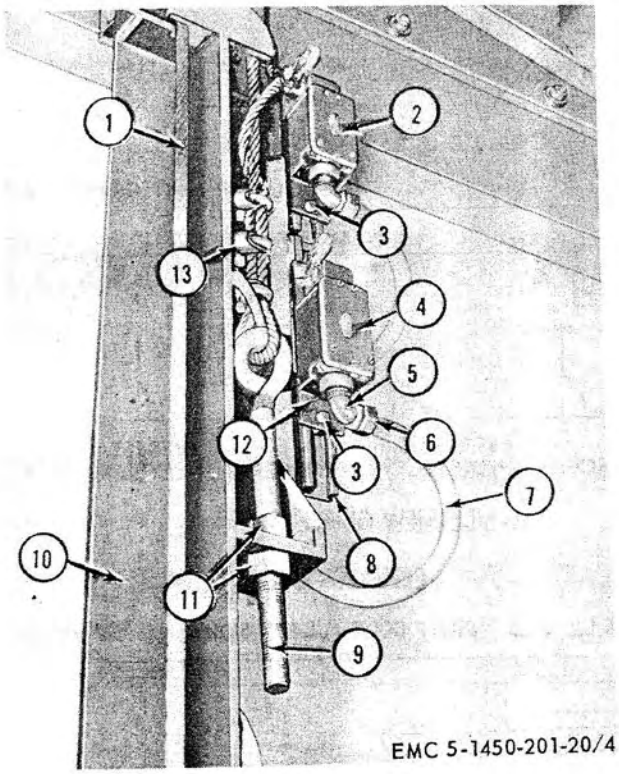

1 Equalizer cable
2 Upper limit switch (17LS)
3 Screw, cap 3/8-16 × 1 in. (4 rqr)
4 Slow-down limit switch (19LS)
5 Elbow, conduit
6 Flexible conduit connection
7 Flexible conduit, liquid tight
8 Limit switch mounting bracket
9 Equalizer adjustment eyebolt
10 Wire rope tie angle
11 Nut, 1-8 in. (2 rqr)
12 Mounting plate
13 Wire rope clip (3 rqr)

Figure 3-12. Elevator limit switches 17LS and 19LS installed.

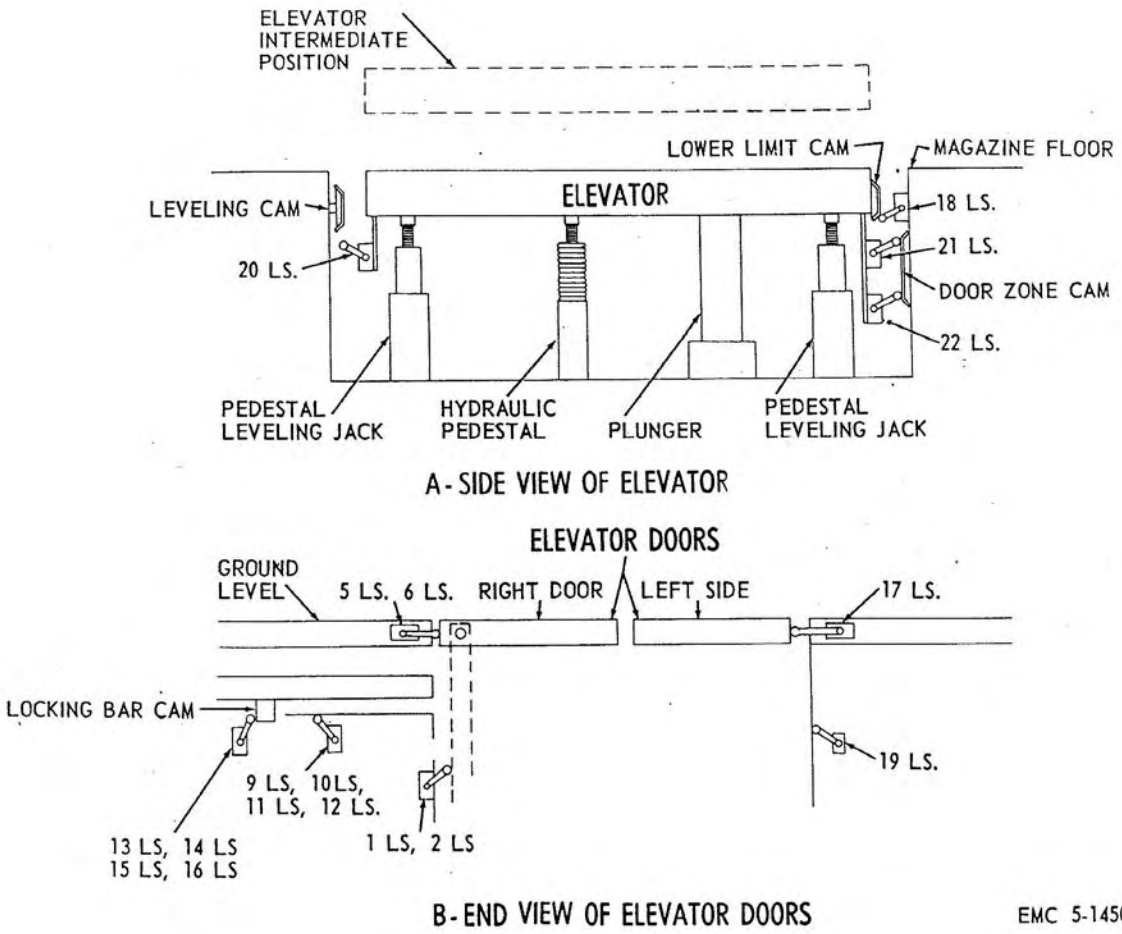

Figure 3-13. Elevator limit switch location.

Section VI. HYDRAULIC SYSTEM

3-101. General

a. General. Two internal gear rotary type pumps are the heart of the hydraulic system of the elevator equipment. Power from these pumps operates the main cylinder and plunger assembly, the door cylinders and the locking bar cylinders. All of the equipment operating valves are found in the power unit. These include the solenoid door opening and locking bar 4-way valves, elevator shutoff valve, two pump bypass valves, lowering and leveling valves, two pump relief valves, a door relief valve and a door bypass valve within the NE-50009 and NE-50010 power units only, a various flow-control, door-balancing, gl and check valves. Although manually opera valves are included in the system, with or two exceptions, their roles are relatively important after the equipment has been inst ed and adjusted.

b. Pumps. Hydraulic pressure is obtai from two pumps which are driven through belts by two electric motors. These pumps s ply all the hydraulic pressure used in the s tem.

c. Main Plunger and Cylinder. This asse bly raises and lowers the elevator platform.

safety check valve installed in the main cylinder piping, having a perforated clapper, prevents dangerously rapid lowering in the event of line failure.

d. Door Cylinders. Four cylinders open and close the doors. Lines feeding the rod end of the door cylinders have flow control valves for controlling door opening speed.

e. Locking Bar Cylinders. Each locking bar is equipped with a hydraulic cylinder which advances and retracts the locking bars.

f. Solenoid Operated 4-Way Valves. Two 4-way valves are installed in the rear of the power unit. The unit at the upper left controls flow of hydraulic fluid to operate the locking bar cylinders. The other 4-way valve controls the hydraulic fluid flow to the door cylinders.

g. Elevator Shutoff Valve. When the doors are being operated, a shutoff valve, which is normally closed, prevents hydraulic fluid from flowing into the cylinder and plunger assembly.

h. Bypass Valves. Two 2-way valves bypass hydraulic fluid from the pumps back to the reservoir while the motors are reaching operating speeds. These valves are normally open until closed electrically by auxiliary contacts in the motor starter when the driving motor shifts to full line voltage. A bypass valve is also installed on NE-50009 and NE-50010 power units in the door circuit for the same purpose. This valve is factory set and requires no further adjustment.

i. Lowering and Leveling 2-Way Valves. The normally closed, 3-inch, 2-way lowering valve is essentially in parallel with a 1-inch 2-way leveling valve. On power units with the exception of NE-50000, NE-50004, and NE-50008, both are opened for fast lowering, the lowering valve closing as the platform approaches the pit floor level. In power units NE-50000, NE-50004, and NE-50008, the lowering valve only is opened for fast lowering. For leveling near floor height, it is closed and the leveling valve is opened.

j. Relief Valves. Two relief valves are installed between pump suction and discharge ports to prevent damage to electrical or hydraulic components in the event of a rapid pressure buildup. Additionally, a relief valve is installed in the door circuit of power units NE-50009 and NE-500010 to limit pressure in the system while the doors are operating. Cracking pressure on this valve is set lower than on the pump relief valves.

k. Flow Control Valves. Each door cylinder is equipped with a flow control valve. These valves are adjustable and control the opening and closing speeds of the doors. They permit relatively free flow when the doors are being closed.

l. Door Balancing Valves. One of these globe valves is installed in each of the door lines. Normally these manually controlled valves are fully open but may be adjusted to synchronize door closing.

m. Check Valves. When the elevator is in its raised position, return of hydraulic fluid to the reservoir is prevented by two check valves. A safety check valve with a perforated clapper is installed at the base of the main cylinder and plunger assembly to prevent rapid lowering of the elevator in the event of a line failure. An additional check valve, located immediately under the door 4-way valve, is included in power unit NE-5007 but is not of critical importance.

n. Manual Valves. Manually operated valves, other than balancing valves, include two pump shutoff valves, a 3-inch tank return shutoff valve, a reservoir drain valve, two tubular sediment gage shutoff valves, two shutoff valves at the locking bar 4-way valve, two shutoff valves at the door cylinder 4-way valve, two door circuit drain valves, a filtering and flushing valve, one pressure gage valve, and a flushing valve at the base of the main cylinder on NE-50004 only. All drain and flushing valves are normally closed. All other manual valves are fully open.

3-102. Elevator Shutoff Valve S6 Adjustment (Atkomatic Type)

a. General. Elevator shutoff valve S6 (atkomatic type) is used on the NE-5007 unit only. It is normally closed and the second of two solenoid two-way shutoff valves installed in the hydraulic system. When pump number 1 is required to close the elevator doors, shutoff valve S6 prevents any pump fluid flow from reaching the elevator system. Adjust valve when shock is imposed on the system by rapid

valve closure or when excessive delay in operaction results from slow valve closure.

b. Adjustment.

(1) Close gate valve (1, fig. 3-14) to eliminate any possible flow through valve SA1.

(2) Seat adjusting screw (4, fig. 3-15) to allow maximum flow through elevator shutoff valve S6 (2).

(3) Seat the adjusting screw on the side of bypass valve SB (1).

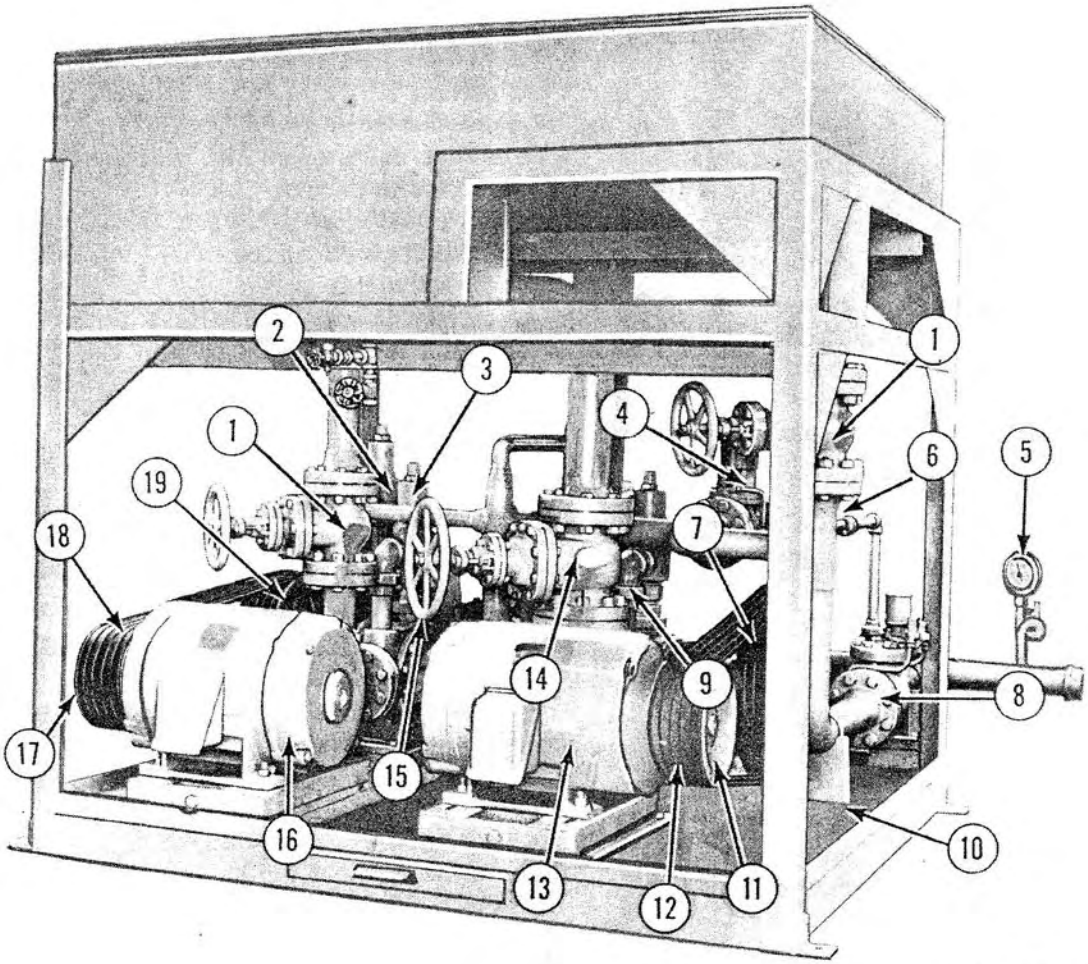

1 Shutoff valve, 3-inch
2 Solenoid valve SA1
3 Safety relief valve, pump No.1
4 Safety relief valve, pump No.2
5 Pressure gage
6 Leveling solenoid valve S3
7 Pump No. 2 sheave
8 Lowering solenoid valve, S4
9 Pump No. 2
10 Power unit support base
11 Motor No. 2 sheave
12 Pump No. 2 V-belts
13 Motor No.2
14 Shutoff valve, 4-inch
15 Pump No. 1
16 Motor No. 1
17 Motor No. 1 sheave
18 Pump No. 1 V-belts
19 Pump No. 1 sheave

Figure 3-14. Power unit, safety guards removed.

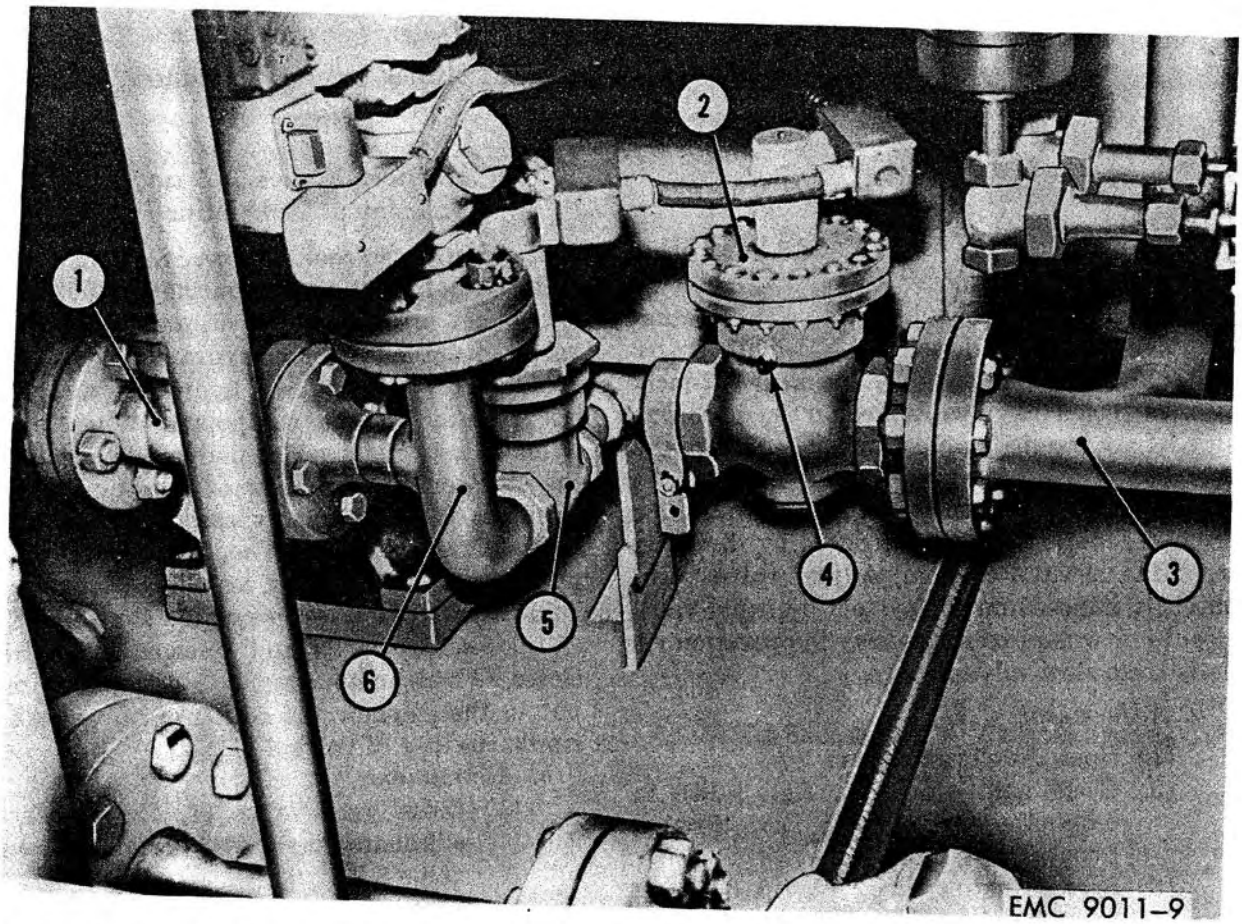

1 Bypass solenoid valve SB
2 Shutoff solenoid valve S6
3 Manifold assembly, 2-1/2 in.
4 Adjusting screw
5 Shutoff solenoid valve S5
6 Piping manifold, 1 1/2 in.

Figure 3-15. Solenoid valves S5, S6, and SB, power unit NE-5007.

(4) Back out the adjusting screw about one-quarter turn.

(5) Operate elevator doors and observe when door action begins. Movement should begin without shock or excessive delay.

(6) Adjust elevator shutoff valve S6 (par. 3-102).

3-103. Doors Bypass Valve SB Adjustment (Atkomatic Type)

a. General. Doors bypass valve SB is used on the NE-5007 power unit only. It is a normally open, solenoid, two-way valve installed in the hydraulic system to prevent the placing of heavy mechanical, hydraulic, and electrical loads on the equipment. Its primary function is to aid in closing the elevator doors. It is located on the discharge side of hydraulic pump number 1.

b. Adjustment.

(1) Close gate valve (1, fig. 3-14) to eliminate any possible flow through valve SA1.

(2) Seat adjusting screw (4, fig. 3-15) to allow a maximum flow through elevator shutoff valve S6(2).

(3) Seat the adjusting screw on side of bypass valve SB (1).

(4) Back out adjusting screw about one-quarter turn.

(5) Operate elevator doors and observe when door action begins. Movement should begin without shock or excessive delay.

(6) Adjust elevator shutoff valve S6 (par. 3-102).

3-104. Door Shutoff Valve S5 Adjustment (Atkomatic Type)

a. General. Door shutoff valve S5 (atkomatic type) is used on the NE-5007 power unit only. It is a normally open, 1 1/2-inch, two-way solenoid valve located on the discharge side of hydraulic pump number 1. When the solenoid of shutoff valve S5 is energized, the valve closes, preventing the pump fluid flow from reaching the elevator doors by directing it to the elevator system. Adjust valve when shock is imposed on the system by rapid valve closure or when excessive delay in operation results from slow valve closure.

b. Adjustment.

(1) Open the elevator doors.

(2) Close gate valve (1, fig. 3-14) to eliminate any possible flow through bypass valve SA1.

(3) Seat adjusting screw (4, fig. 3-15) to allow maximum flow through elevator shutoff valve S6 (2).

(4) Seat the adjusting screw on the side of bypass valve SB (1).

(5) Seat the adjusting screw on the door shutoff valve S5 (5) and back out one-quarter turn.

(6) Start pump by pressing UP button and observe upward movement. Movement should begin without shock or excessive delay.

(7) Rotate adjusting screw clockwise to increase valve opening speed, slow closing speed, and increase flow through the valve.

(8) Rotate adjusting screw counterclockwise to decrease valve opening speed, increase closing speed, and reduce flow through the valve. All adjustments should be made in small increments of one-eighth to one-quarter turn.

(9) Adjust bypass valve SB (par. 103).

(10) Adjust elevator shutoff valve S (par. 3-102).

3-105. Solenoid Valves SA1 and SA2 Adjustment (Atkomatic Type)

a. General. Solenoid valves SA1 and SA (atkomatic type) are used on the NE-5007 ur only. They are normally open solenoid two-w valves installed in the hydraulic system avoid heavy mechanical, hydraulic, and ele trical loads on the equipment. When pun number 1 is required to deliver its output the elevator, the full flow of the pump pass through valve S5 and bypass valve SB to t hydraulic fluid tank. When the pump com up to speed, shutoff valves S5, S6, and sol noid valve SA1 are energized, shutoff val S5 closes, S6 opens and solenoid valve SA closes. When pump number 2 delivers its ou put to the elevator the action of valve SA2 similar to that of valve SA1.

b. Adjustment.

(1) Close gate valve (1, fig. 3-14) eliminate any possible flow throug valve SA1.

(2) Seat adjusting screw in valve SA (20) and then back off one-quart turn.

(3) Raise elevator platform, observing th time delay between time pump nun ber 1 starts and the elevator platfor starts to rise. There should be a ve slight time delay.

(4) Turn the adjusting screw clockwi to increase fluid flow and counte clockwise to decrease fluid flo

Caution: Adjustment to valv SA1 and SA2 should be made in i crements of one-eighth of a turn u til proper operation is obtained. I no case should adjusting screw be s less than one-eighth turn from th bottom.

(5) Adjust bypass valve SA2 (1, fi 3-16) in the same manner. Howeve pump number 2 is involved instea of pump number 1.

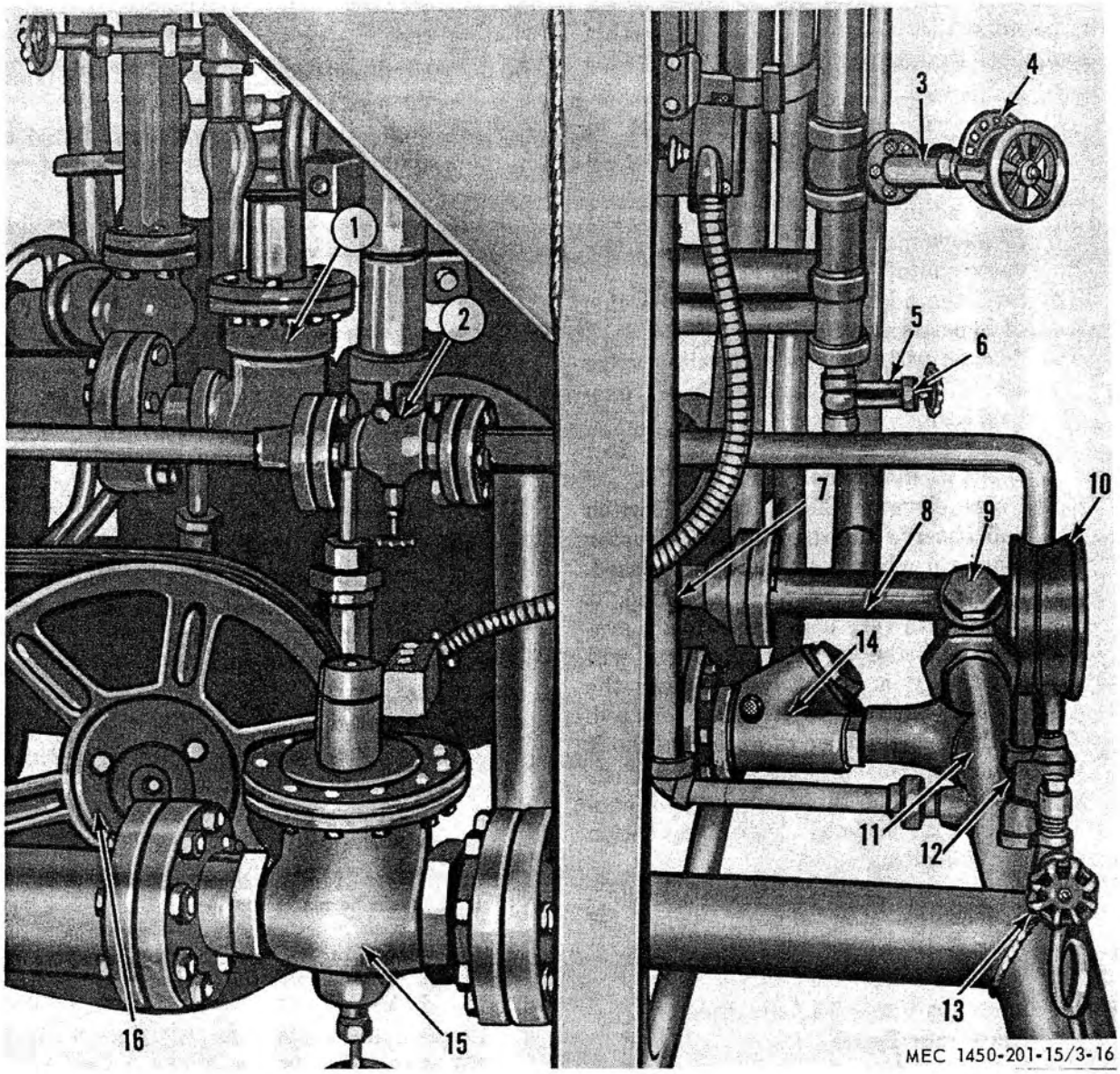

1 Bypass solenoid valve SA2
2 Leveling solenoid valve S3
3 Door shutoff valve, rod end
4 Door shutoff valve, head end
5 Door bleed valve, head end
6 Door bleed valve, rod end
7 Shutoff solenoid valve S6
8 Manifold assembly, 2-1/2 inch
9 Check valve 2-1/2 inch
10 Pressure gage
11 Manifold assembly, 3-inch
12 Pipe tee 1/2 inch
13 Needle valve, 1/4-inch
14 Check valve, 2-1/2 inch
15 Lowering valve, S4
16 Pump No. 2 pulley

Figure 3-16. Power unit, rear view.

3-106. Leveling Valve S3 Adjustment (Atkomatic Type)

a. General. Leveling valve S3 (atkomatic type) is used on the NE-5007 power unit only. It is the second of the two normally closed two-way solenoid valves that control the hydraulic fluid to lower the elevator. To lower the elevator, both lowering valve S4 and leveling valve S3 are energized. To slow the rate

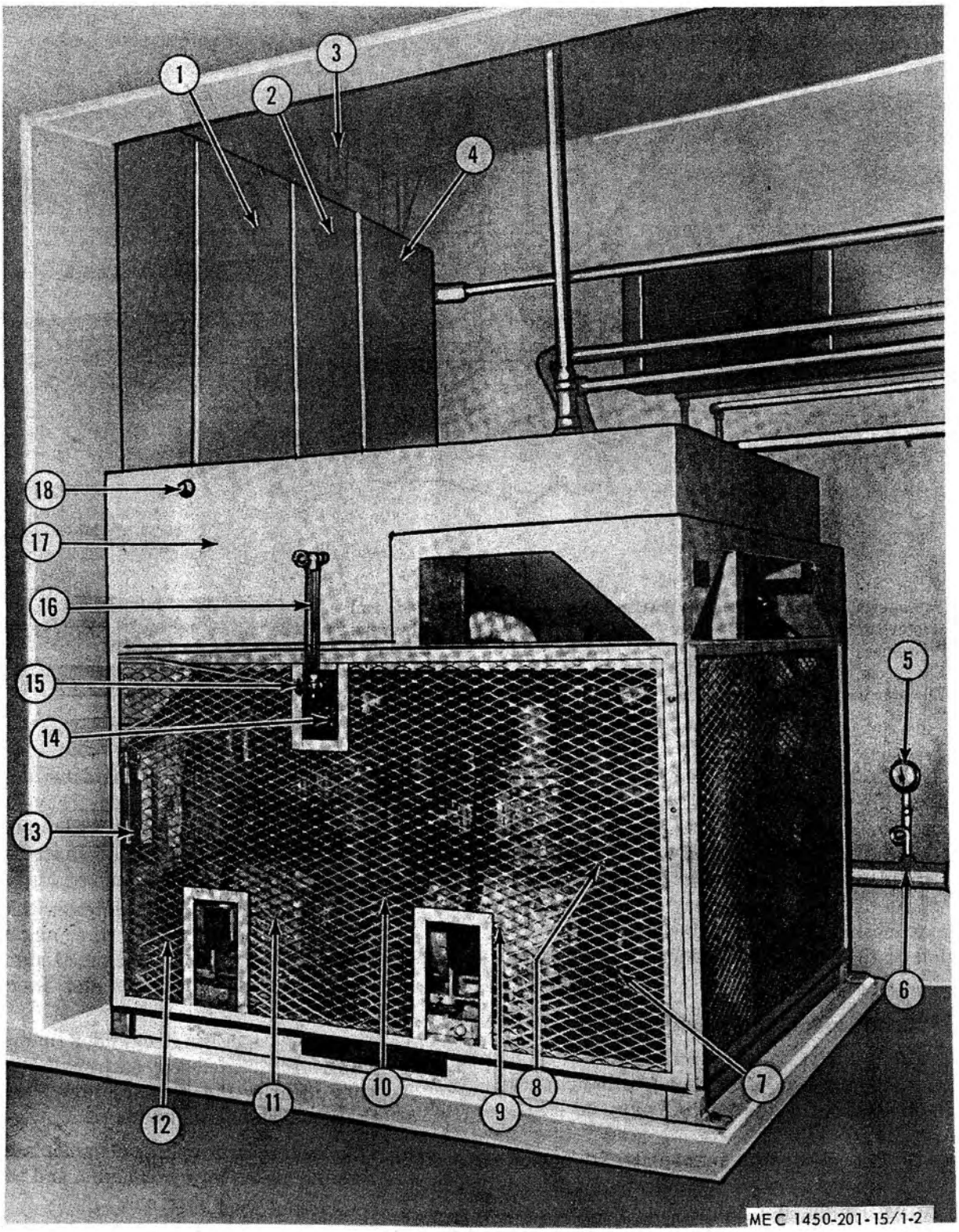

Figure 1-2. Power unit and control cabinets, installed view.

of descent, leveling valve S4 is deenergized. This permits the elevator to stop smoothly without shock to the hydraulic system.

b. Adjustment.

(1) Close gate valve (1, fig. 3-14) to eliminate any possible flow through solenoid valve SA1.

(2) Seat adjusting screw (4, fig. 3-15) to allow maximum flow through elevator shutoff valve S6 (2).

(3) Seat the adjusting screw on the side of bypass valve SB (1).

(4) Seat adjusting screw on leveling valve S3 (2, fig. 3-16) and back off one-half turn.

(5) Raise elevator platform about 6 feet above its magazine floor.

(6) Press elevator STOP button switch and observe the drift of the elevator platform when the switch is released.

(7) If the valve is properly adjusted, it closes with very little shock in the system, and the elevator platform will have only a slight drift when the STOP button switch is released.

(8) If there is evidence of excessive shock or drift, continue backing the adjusting screw off in increments of one-eighth turns until desired operation is obtained.

(9) Adjust bypass valve SB (par. 3-103).

(10) Adjust elevator shutoff valve S6 (par. 3-102).

3-107. Lowering Valve S4 Adjustment (Atkomatic Type)

a. General. Lowering valve S4 (atkomatic type) is used on the NE-5007 power unit only. It is one of two normally closed, two-way, solenoid valves that control the flow of hydraulic fluid to lower the elevator platform. When the elevator platform is stopped in any position, that position is maintained because of the hydraulic fluid trapped between the main cylinder, the check valves, and the lowering and leveling valves. To lower the elevator rapidly, the lowering valve S4 and the leveling valve S3 are opened when their solneoid are energized. To lower the elevator slowly, only leveling valve S3 is energized.

b. Adjustment.

(1) Close gate valve (1, fig. 3-14) to eliminate any possible fluid flow through bypass valve SA1.

(2) Seat adjusting screw (4, fig. 3-15) to allow maximum flow through elevator shutoff valve S6 (2).

(3) Seat the adjusting screw on the side of bypass vave SB (1).

(4) Seat adjusting screw on lowering valve S4 (15, fig. 3-16) and back off one and one-half turns and turn handwheel counterclockwise to fully open position.

(5) Raise elevator platform until the locking bars are engaged.

(6) Press DOWN button and check time required for lowering cycle.

(7) Adjust lowering valve S4 to allow empty elevator to complete lowering cycle 34 seconds after DOWN button is depressed. Time should be 2 seconds with a missile on the elevator platform.

(8) To speed the descent of the elevator platform, turn the adjusting screw clockwise, and to slow the rate of descent, turn the adjusting screw counterclockwise.

Note. Adjustments to lowering valve S4 should be made in increments of one-eighth of a turn until the desired operation is obtained. In no case should the adjusting screw be set less than one-eighth turn from the seat.

(9) Adjust bypass valve SB (par. 3-103).

(10) Adjust elevator shutoff valve S6 (par. 3-102).

3-108. Lowering Valve S4 Adjustment (ASCO Type)

a. General. Lowering valve S4 (ASCO type) is used on power unit NE-50000, NE-50004, NE-50008, NE-50009, and NE-50010. It is one of two normally closed, two-way, solenoid valves that control the flow of hydraulic fluid to lower the elevator platform. The operation of this valve is the same as the operation of lowering valve S4 (atkomatic type) described in paragraph 3-107.

b. Adjustment.

(1) Remove adjusting screw caps (2 and 3, fig. 3-17) from lowering valve S4.

(2) Set adjusting screw (1) to allow the valve to close 1 second after the valve is deenergized. Slow the valve closing speed by turning screw clockwise or increase closing speed by turning counterclockwise.

(3) Set adjusting screw (4) to allow the valve to open fully 1 second after the DOWN button is pressed. Turn screw clockwise to slow valve opening speed or counterclockwise to increase the speed.

(4) Loosen locknut (6) and adjust lowering speed adjusting screw (5) so that the elevator platform will lower from the locking bars to the pedestals in 34 seconds without a missile, and 32 seconds with a missile on the platfrom.

(5) Install adjusting screw caps (2 and 3) and tighten locknut (6).

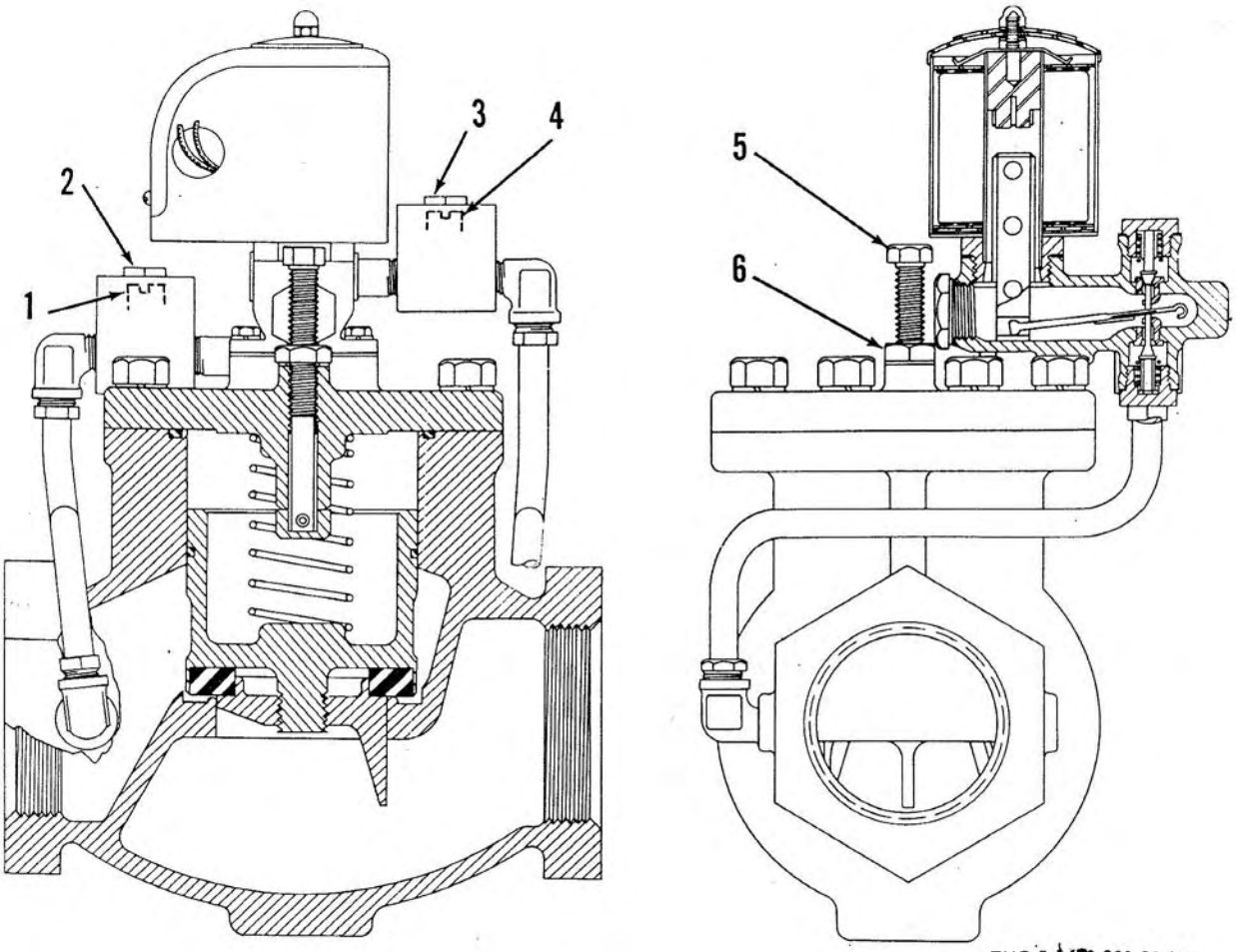

1 Closing speed adjusting screw
2 Adjusting screw cap
3 Adjusting screw cap
4 Opening speed adjusting screw
5 Lowering speed adjusting screw
6 Adjusting screw locknut

Figure 3-17. Lowering valve S4 adjustment (ASCO type).

3-109. Leveling Valve S3 Adjustment (ASCO Type)

a. General. Leveling valve S3 (ASCO type) is used on power units NE-50000, NE-50009, and NE-50010. It is one of two normally closed, two-way, solenoid valves that control the flow of hydraulic fluid to lower the elevator platform. The operation of this valve is the same as the operation of leveling valve S3 (atkomatic type) described in paragraph 3-106.

b. Adjustment.

(1) Remove adjusting screw caps (2 and 4, fig. 3-18) from leveling valve S3.

(2) Set adjusting screws (3 and 5) to their fully open position.

(3) Loosen locknut (6) and turn adjusting screw (1) either clockwise or

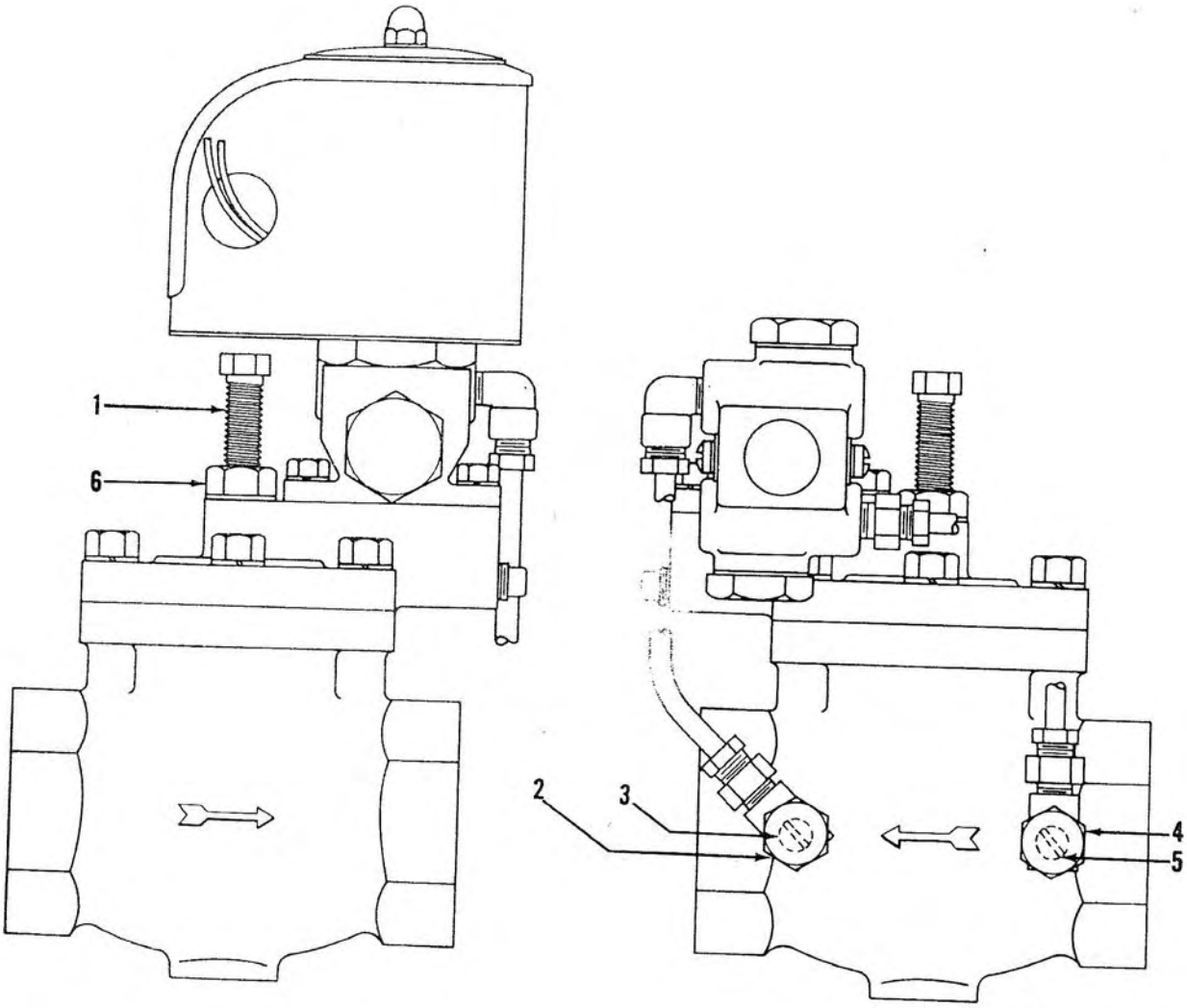

EMC 5-1450-201-20/32

1 Leveling speed adjusting screw
2 Adjusting screw cap
3 Opening speed adjusting screw
4 Adjusting screw cap
5 Closing speed adjusting screw
6 Adjusting screw locknut.

Figure 3-18. Leveling valve S3 adjustment for power units NE-50000, NE-50004, NE-50008, NE-50009, and NE-50010.

counterclockwise to allow the elevator to level at the rate of 1 foot in 5 seconds.

(4) After adjustment is completed install the adjusting screw caps (2 and 4).

(5) Tighten locknut (2) on adjusting screw (1).

3-110. Bypass Valve SA1 and Bypass Valve SA2 Adjustment (ASCO Type)

a. General. Bypass valves SA1 and SA2 (ASCO type) are used on power unit NE-50000, NE-50004, NE-50008, NE-50009, and NE-50010. They are normally open, solenoid, two-way valves installed in the hydraulic system to reduce heavy mechanical, hydraulic, and electrical loads on the equipment. Valve SA1 bypasses fluid flow from pump number one and valve SA2 bypasses fluid flow from pump number two. Both valves are adjusted in the same manner.

b. Adjustment.

(1) Remove adjusting screw cap (1, fig. 3-19).

(2) Seat adjusting screw (2) and set on turn from its seated position.

(3) Start pump number 1 by pressing elevator UP button.

(4) Observe upward movement of the elevator platform. Movement should begin without shock or excessive delay.

(5) Turn adjusting screw (2) clockwise to increase valve closing time, counterclockwise to decrease closing time.

(6) Repeat the above adjustment until the condition as determined by (4) above is obtained.

(7) Install adjusting screw cap (1).

3-111. Wiper Ring

a. General. A wiper ring is installed on top of the packing gland at the base of the hydraulic cylinder. It cleans oil seepage and dirt from the plunger outer surface during elevator descent. It is held in place by a pressure plate bolted to the packing gland with six spring loaded bolts. Increased spring pressure exerts force to apply a uniform pressure around the circumference of the pressure plate.

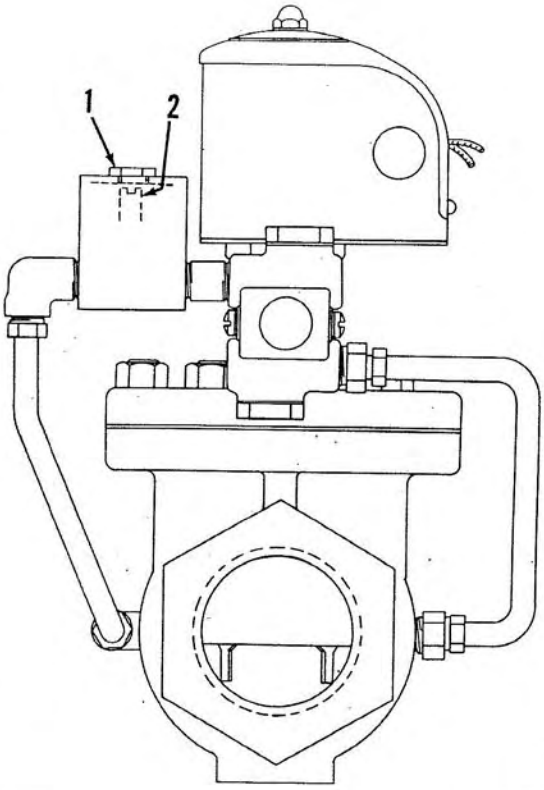

EMC 5-1450-201-20/33

1 Adjusting screw cap
2 Adjusting screw

Figure 3-19. Bypass valves SA1 and SA2.

b. Removal.

(1) Lower elevator platform until it rests on the pedestals.

(2) Close the 3-inch shutoff valve (1, fig. 3-20).

(3) Remove six screws (5) and springs securing the wiper ring pressure plate (4) to packing gland (6).

(4) Lift pressure plate and remove wiper ring (3).

Caution: **Cleanliness throughout the hydraulic system is imperative to maintain proper elevator operation. When disassembling any valves, nipples, or other hydraulic plumbing, be sure to thoroughly clean all items with potable water.**

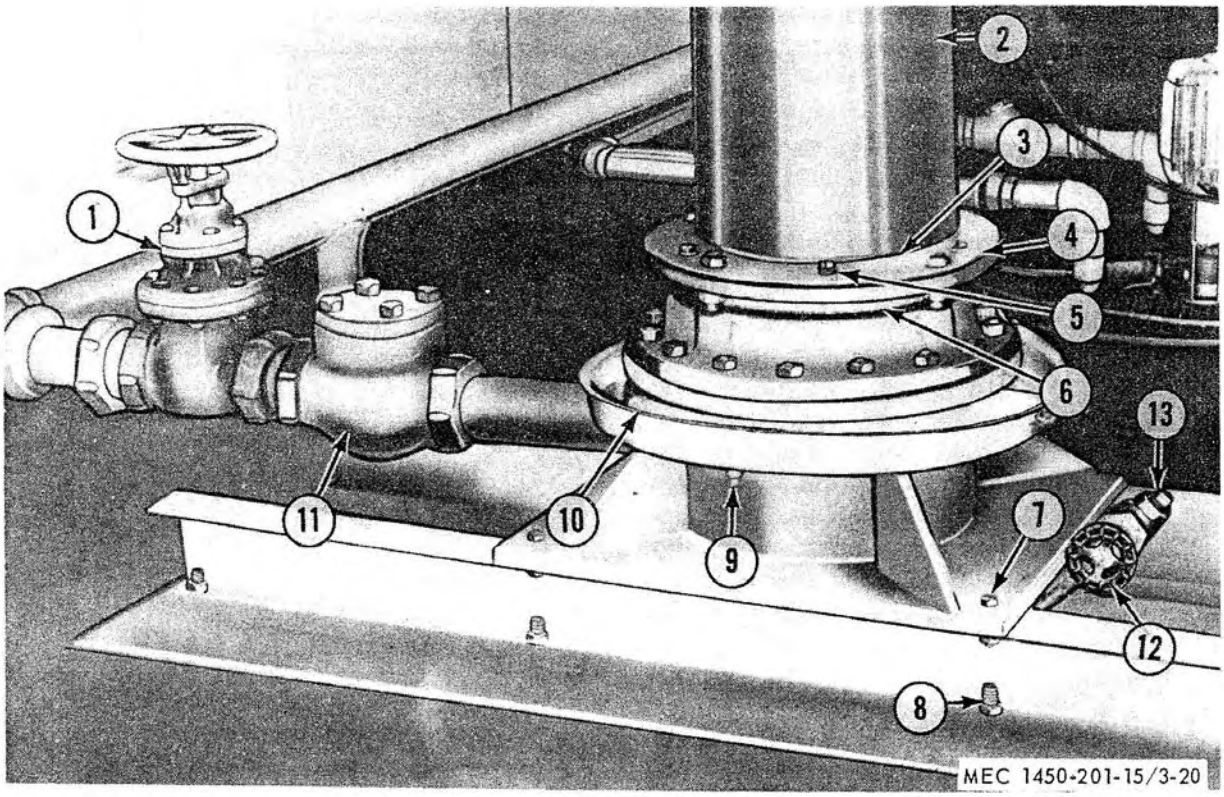

1 Shutoff valve, 3-in.
2 Cylinder and plunger assembly
3 Wiper ring
4 Wiper ring pressure plate
5 Pressure plate adjusting screw, 1/2-13 × 1-1/2 in. (6 rqr)
6 Packing gland
7 Capscrew 1/4-20 × 3 in. (2 rqr)
8 Lag bolt, 7/8-9 × 9 in. (8 rqr)
9 Drain plug, 1/2 in.
10 Drip pan
11 Check valve
12 Flushing valve
13 Flushing valve plug

Figure 3-20. Main cylinder and plunger assembly, installed view.

c. Cleaning and Inspection.

(1) Clean all parts using potable water.

(2) Replace wiper ring.

d. Installation.

(1) Position wiper ring (3) on packing gland (6).

(2) Position wiper ring pressure plate (4) on packing gland and install six springs and screws (5).

(3) Open the 3-inch shutoff valve (1).

(4) Raise and lower the elevator platform to check the seepage.

e. Adjustment.

(1) Alternately tighten opposite screws (5).

(2) Adjust screws tight enough to put tension on each spring and obtain cleaning action.

3-112. Relief Valve Gasket

a. Removal.

(1) Shut off the power to the elevator.

(2) Remove adjusting screw cap (1, fig. 3-21) from pump number 1 relief valve (5, fig. 3-22).

(3) Remove gasket (2, fig. 3-21) from valve (3).

(4) Repeat above procedure for pump number 2 relief valve.

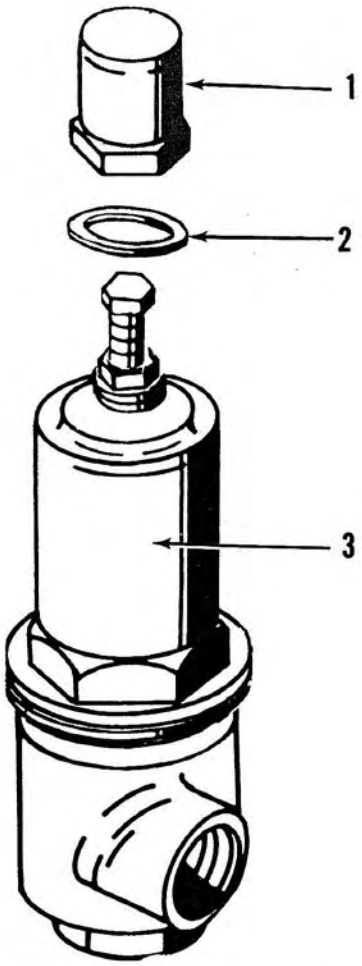

EMC 5-1450-201-20/23

1 Adjusting screw cap
2 Gasket
3 Valve

Figure 3-21. Pump safety relief valve, partially exploded.

b. Cleaning, Inspection, and Repair.

(1) Clean all parts with potable water.
(2) Replace relief valve gasket.
(3) Inspect adjusting screw cap for cracks and stripped or burred threads. Replace an adjusting screw cap with cracks or stripped or burred threads.

c. Installation.

(1) Position gasket (2) on the valve (3).
(2) Install and secure adjusting screw cap (1).
(3) Turn on the power to the elevator.

3-113. Flow Control Valve O-Rings

a. Removal.

(1) Loosen and remove acorn nut (1, fig. 3-23) from threaded valve stem (6) and pull O-ring (2) from acorn nut on door flow control valve (9, fig. 3-8).
(2) Unscrew the valve stem locknut (3, fig. 3-23) from valve stem and pull O-ring (2) from groove in valve stem locknut.
(3) Loosen valve stem cap (4) and allow the line to drain.
(4) Remove valve stem cap (4) from valve body (7) and remove O-ring (5) from under valve cap.
(5) Repeat above procedure for remaining flow control valves.

b. Cleaning, Inspection, and Repair.

(1) Clean all parts with potable water.
(2) Inspect the O-rings for cracks or excessive wear. Replace a cracked or worn O-ring.
(3) Inspect acorn nut, valve stem locknut, and valve stem cap for damaged threads. Replace if necessary.

c. Installation.

(1) Install O-ring (2) in valve stem cap (4) and thread valve stem cap into valve body (7) and valve stem (6).
(2) Install O-ring (2) in valve stem locknut (3) and secure valve stem locknut on valve stem (6).
(3) Install O-ring (2) in acorn nut (1) and secure the acorn nut.
(4) Repeat above procedure for remaining flow control valves.

3-114. Hydraulic Reservoir Access Cover Plate

a. Removal.

(1) Shut off the main power switch.

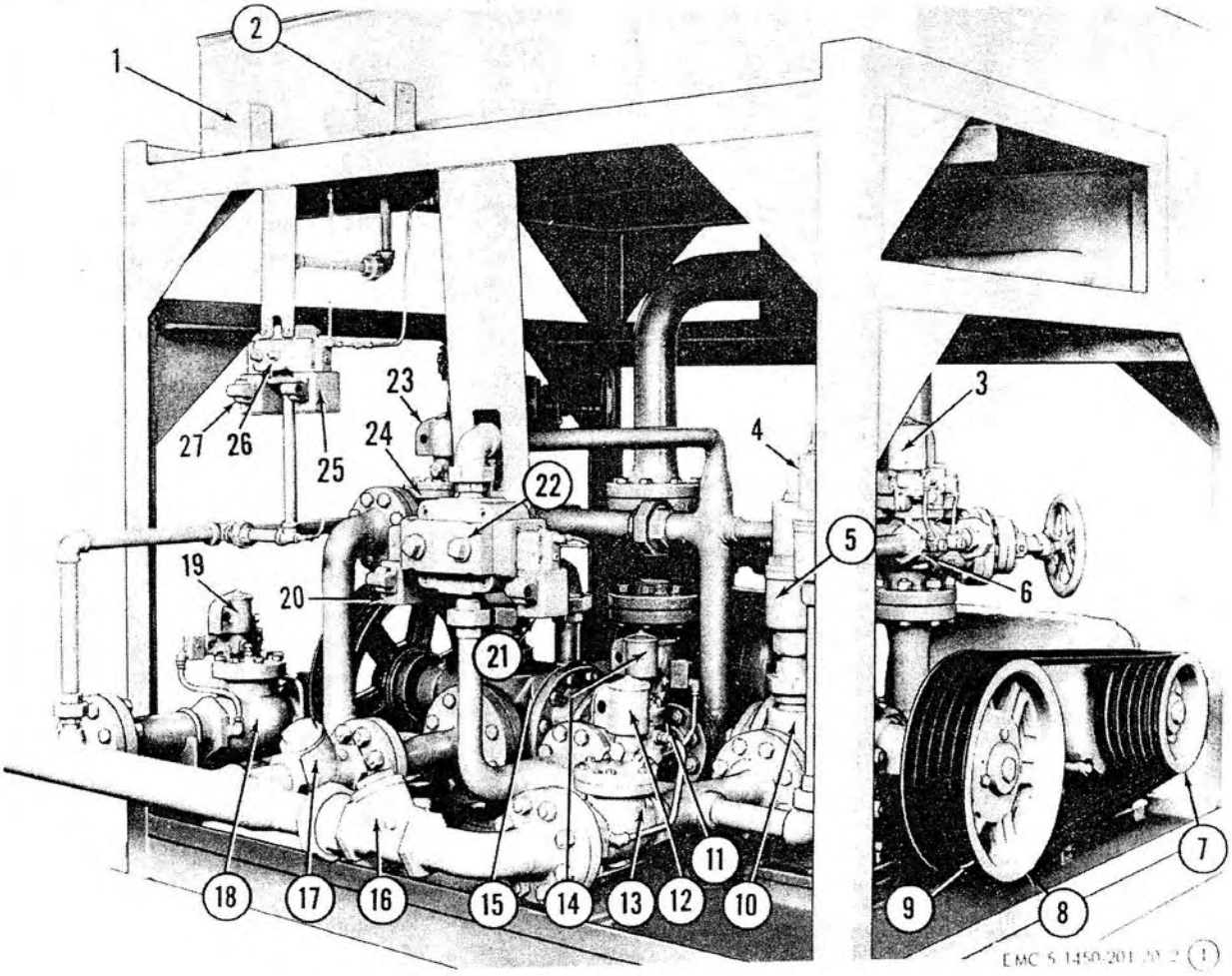

1 Pressure switch No.2
2 Pressure switch No. 1
3 Door bypass solenoid S7
4 Door relief valve, NE-50009 and NE-50010 power units
5 Pump No. 1 relief valve
6 Door bypass valve
7 Motor sheave
8 Pump sheave
9 V-belts
10 Pump No. 1
11 Pump No. 1 bypass valve
12 Elevator shutoff solenoid S6
13 Elevator shutoff valve
14 Pump No. 1bypass Solenoid SN
15 Pump No. 2
16 Pump No. 1 check valve
17 Pump No. 2 check valve
18 Two-way lowering valve
19 Lowering solenoid S4
20 Locking bar engage solenoid, S4
21 Four-way locking bar valve
22 Locking bar retract solenoid, S2B
23 Pump No. 2 bypass valve
24 Pump No. 2 bypass solenoid, SA2
25 Four-way door operating valve
26 Door operating solenoid, S1A
27 Door close solenoid, S1B

Figure 3-22 (1). Power unit, overall view.

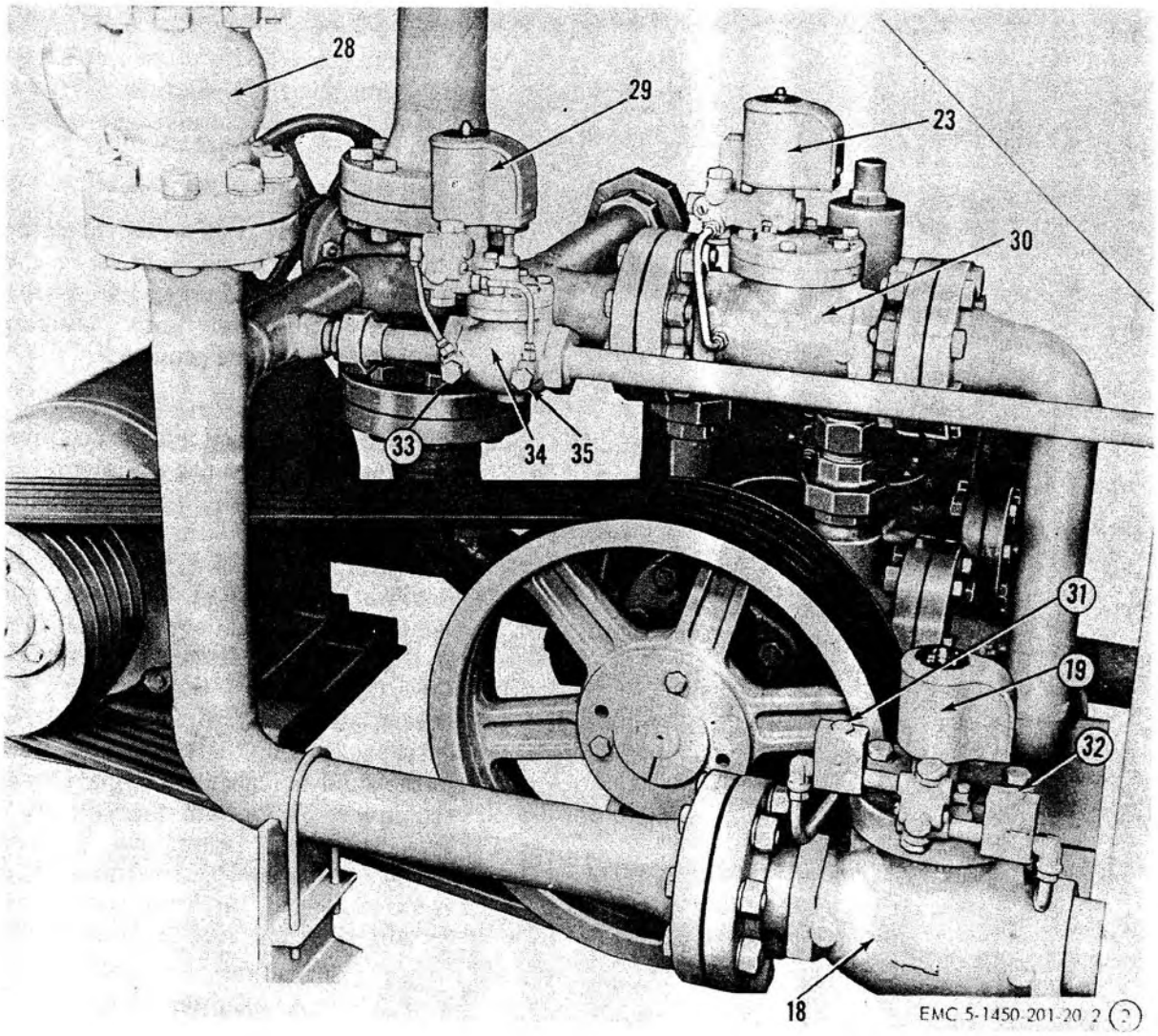

28 Tank shutoff valve, 3-inch
29 Leveling solenoid, S3
30 Pump No. 2 bypass valve
31 Lowering valve cap (opening speed)
32 Lowering valve cap (closing speed)
33 Leveling valve cap (opening speed)
34 Two-way leveling valve
35 Leveling valve cap (closing speed)

Figure 3-22 (2)—Continued.

(2) Remove 16 screws (1, fig. 3-24) from access cover plate (18).

Caution: **Prior to removal of access cover plate thoroughly clean the surrounding area. Cleanliness throughout the hydraulic system is imperative to maintain proper elevator operation.**

(3) Remove access cover plate and gasket (3) from hydraulic fluid reservoir (16).

b. Cleaning, Inspection, and Repair.

(1) Clean all parts with potable water.

(2) Inspect access cover plate for bends, breaks, or other damage. Replace a bent or broken access cover plate.

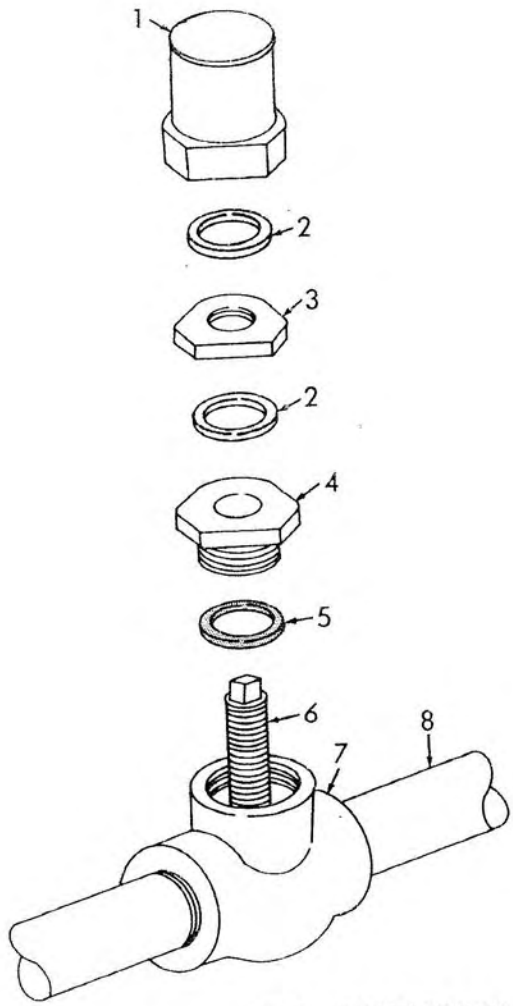

EMC 5-1450-200-20/27

1 Acorn nut
2 O-ring (2 rqr)
3 Valve stem locknut
4 Valve stem cap
5 O-ring packing
6 Valve stem
7 Valve body
8 Door hydraulic line

Figure 3-23. Door flow control valve, partially exploded.

(3) Inspect all mounting hardware for damage. Replace any damaged mounting hardware.

c. *Installation.*

(1) Position gasket (3) on hydraulj fluid reservoir (16).

(2) Position cover plate (18) on gaske and hydraulic fluid reservoir.

(3) Install 16 screws (1) and secure cove plate.

(4) Turn on the main power switch.

Caution: **If the wiper pressur plate screws are too tight, excessiv pressure on the plunger will retar plunger movement and possibl cause scoring of the plunger.**

d. *Filtering.*

(1) Cycle the doors and platforms thr times to insure proper circulation the hydraulic fluid.

(2) Place the main power switch in tl OFF position.

(3) Remove 16 screws (1, fig. 3-24) an remove the access cover plate (18 and gasket (3) from the reservo (16).

(4) Invert a pint can so that air will entrapped when the can is immers in the fluid to obtain a sample. Plun the inverted can into the fluid to level one foot below the surfa While at this level, turn the can u right to receive the sample and quic ly withdraw the can from the flui

(5) Insert the suction end of the pur hose into the reservoir and start t pump. Make sure the receiving r ervoir is perfectly clean.

Note. Use an 80-micron filter when moving the fluid from the reservoir.

(6) When the hydraulic fluid has be removed from the reservoir, open t drain valve (6) and clean the inter of the reservoir with a squeeg brush or sponge. Drain fluid resid into a container.

(7) Loosen the sight gage sealing n (7 and 10) and remove the sight ga tube (9).

(8) Remove the suction hose and the f filter elements from the reserv

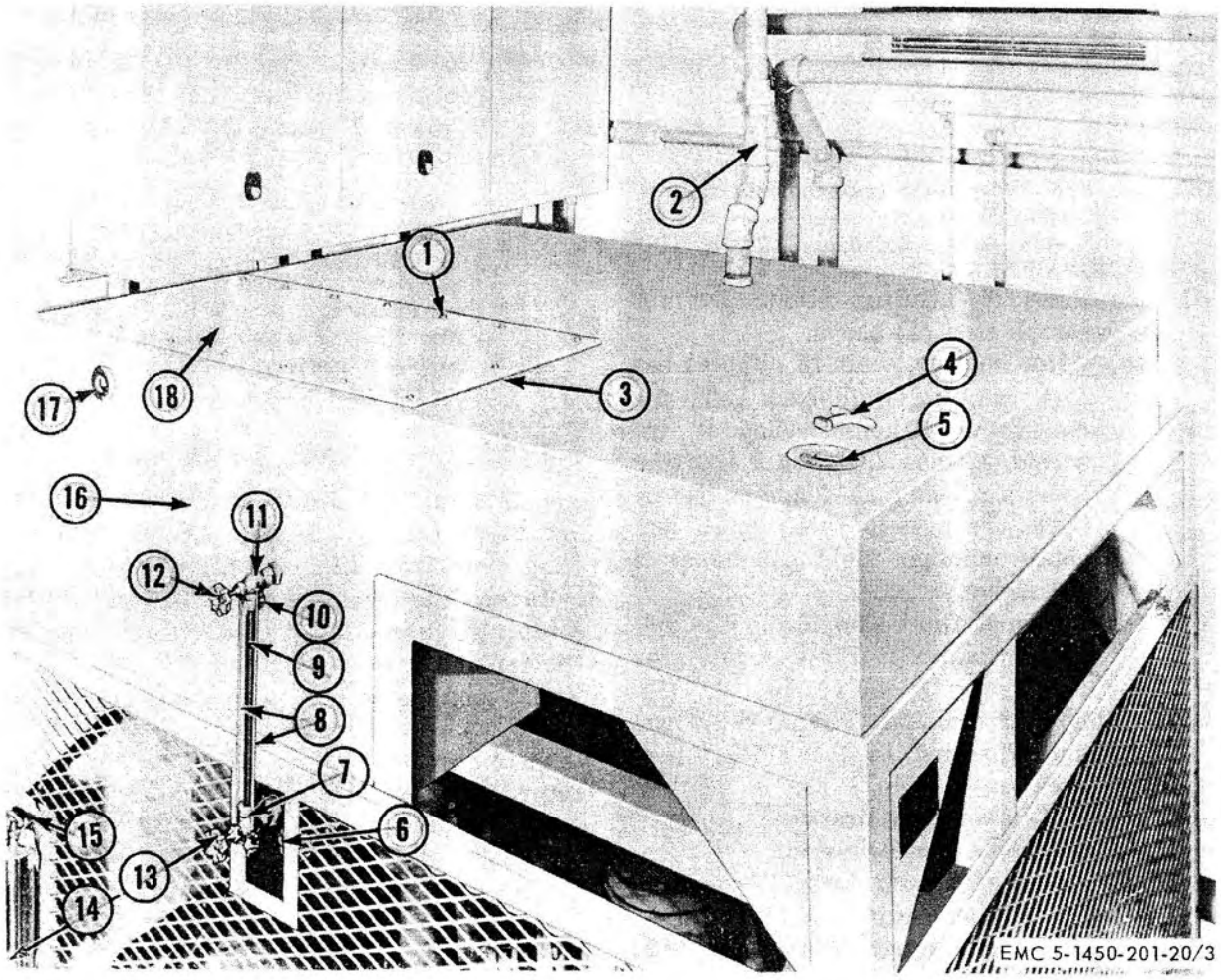

1 Screw, 1/4–20 × 5/8 in. (16 rqr)
2 Vent pipe assembly
3 Gasket
4 T-wrench
5 Reservoir filler cap
6 Reservoir drain valve
7 Sight gage sealing unit
8 Protective rod (2 rqr)
9 Sight gage tube
10 Sight gage sealing nut
11 Upper valve
12 Upper valve shutoff handle
13 Lower valve shutoff handle
14 Fire extinguisher
15 Fire extinguisher bracket
16 Reservoir
17 Hydraulic fluid level gage
18 Access cover plate

Figure 3–24. Power unit, top view.

(9) Refer to paragraph 3–117, and remove the line strainer.

e. Clean and Inspection.

(1) Clean all parts thoroughly using potable water and air dry.

(2) Inspect all parts for cracks, breaks, or other damage.

(3) Inspect reservoir for signs of metal particles and other foreign matter.

f. Install Hydraulic Fluid.

(1) Install the sight gage tube (9) and secure with the sealing nuts (7 and 10).

(2) Place the two valve handles (12 and 13) in the OPEN position. Close the drain valve (6).

(3) Refer to paragraph 3–117, and install the line strainer. Install the four filter elements.

1 Motor No. 1 starter cabinet
2 Motor No. 2 starter cabinet
3 Control power switch
4 Control relay cabinet
5 Hydraulic pressure gage
6 Pressure gage valve
7 Motor No. 2 v-belt
8 Pump No. 2
9 Motor No. 2, elevator only
10 Pump No. 1
11 Motor No. 1, locking bars, doors and elevator
12 Motor No. 1 V-belt
13 Fire extinguisher
14 Reservoir drain valve
15 Gage drain valve
16 Tubular sight gage
17 Reservoir
18 Hydraulic fluid level sight gage

Figure 1-2—Continued.

manufacturer, model, serial number, and pressure setting.

(7) An identification plate is mounted on each of the seven atkomatic type solenoid valves in the NE-5007 power unit. They specify the manufacturer, size, liquid medium, maximum and minimum pressures, type, serial number, and input rating.

(8) An identification plate is mounted on each of the five Automatic Switch Company type solenoid valves in the NE-50000, NE-50008 power unit. NE-50009 and 50010 and 50012 power units have six solenoid valves and identification plates. They specify manufacturer, catalogue number, serial number, input rating, maximum pressure, and type of liquid.

(9) An identification plate is mounted on the body of the locking bar four-way valve. It specifies manufacturer, model, and serial number.

(10) An identification plate is mounted on the body of each door four-way valve. They specify manufacturer, model, and serial number.

(11) An identification plate is mounted on the locking bar flow control valve which is used in the NE-5007 power unit only. It specified manufacturer, model, and serial number.

(12) An identification plate is mounted on the body of each door operating flow control valve located near the door cylinders. They specify the manufacturer, model, serial number, and pressure.

(13) An identification plate is mounted on each of the two Square D pressure switches applicable to NE-5007 power units only. These plates specify manufacturer, class, type, form, range, differential pressure, number, and input ratings.

(14) An identification plate is mounted on each of two Penn Controls pressure switches applicable to NE-50008, NE-50009, NE-50010, and 50012 power units. NE-50000 and NE-50004 power units utilize a single pressure switch and identification plate. These plates specify manufacturer, type, range, and model number.

(15) An identification plate is located in the motor control cabinet. It specifies the manufacturer, model, and output rating of the motor control assembly.

(16) An identification plate is mounted on each timing relay. One relay is located in each of the two motor starter cabinets, and two are located in the control relay cabinet above the power unit. These plates specify the manufacturer, serial number, and input rating.

(17) An instruction plate located on the locking bar flow control valve indicates the direction of controlled flow through the valve.

b. Tabulated Data.

(1) *Hydraulic pump No. 1.*

(*a*) *Type B and C.*

Manufacturer	Worthington Corp.
Model	3 GRMI
Capacity	168 gpm (gallons per minute)
Drive	4 V-Belts

(*b*) *Type B-4, B-5, and D.*

Manufacturer	Worthington Corp.
Model	3 GRMI Modified
Capacity	155 gpm
Drive	5 V-Belts

(4) Insert the discharge hose in the access opening and start the pump.

Note. Use a 20 or 30-micron filter when pumping the filtered fluid back into the reservoir.

(5) Check the sight gage and add additional fluid as required.

Note. When filtering in cold temperatures, 50° to 32°F., it may be necessary to heat the fluid to a maximum of 180°F. (DO NOT OVERHEAT).

(*a*) Prior to heating, obtain a fluid sample as *d* (4) above.

(*b*) After heating, wait 15 minutes before pumping fluid back into the reservoir. When heating is required, always filter back into the reservoir using a 10-micron filter.

(*c*) Cycle the system three times and obtain another fluid sample as *d* (4) above.

(*d*) Forward fluid samples to the following address: First Army area plus states, Michigan, Indiana, Illinois, Wisconsin, Minnesota, Iowa, and Missouri in the Fifth Army area to—

Laboratory Branch
Petroleum Division
Schenectady Army Depot
Schenectady, N. Y., 12306

Third and Fourth Army areas are to forward samples to—

Laboratory Branch
Petroleum Division
Charleston Army Depot
Charleston, S. C.

The Sixth Army plug the remainder of the Fifth Army area not covered by the Schenectady Laboratory, to—

Laboratory Branch
Sharpe Army Depot
Lathrop, Calif.

(*e*) The laboratory analysis report will be returned to the sending agency on DA Form 2077.

Caution: **Check the sight gage weekly, if severe discoloration is noted from normal fluid color, obtain sample as in *d* (4) above and forward immediately to the testing laboratory to ensure the fluid i: not detrimental to the system.**

(6) Install the gasket (3) and acces cover plate (18) on the reservoi (16) and secure with the 16 screw (1).

Note. The hydraulic fluid is to be filtere annually. The samples are to be forwarde quarterly. The analysis from the laborator may direct additional filtering. This is to b accomplished. A sample is to be forwarde after filtering is completed, as an assuranc sample. A log is to be kept on the analysi and the filter periods and results.

3-115. Shutoff Valves, 3-Inch and 4-Inch

a. General. The 3-inch main cylinder shut off valve (1, fig. 3-20) isolates hydrauli fluid flow from the power unit to the mai cylinder. The 4-inch number 2 pump suctio shutoff valve isolates hydraulic fluid flow fro the tank to number 2 pump (15, fig. 3-22) The 3-inch number 1 pump suction shutof valve isolates hydraulic fluid flow from th tank to number 1 pump (10). The 3-inch tan return shutoff valve (28) isolates hydrauli fluid flow from the return hydraulic system t the tank. Repair instructions are identical o all 3-inch and 4-inch shutoff valves.

b. Handwheel and Packing Remova.

(1) Remove handwheel nut (1, fig. 3-25) from stem (9).

Caution: **Cleanliness throughou the hydraulic system is imperative t maintain proper elevator operation. When disassembling any valves, nipples, or other hydraulic plumbing be sure to thoroughly clean all items.**

(2) Remove handwheel (2) from stem.

(3) Remove two adjusting nuts (3) from adjusting bolts (5).

(4) Remove packing gland (4)from adjusting bolts (5) and stem (9).

(5) Remove remaining two adjusting nuts (3) from adjusting bolts (5).

(6) Remove adjusting bolts (5) from stuffing box (7).

(7) Remove packing (8) from stuffing box.

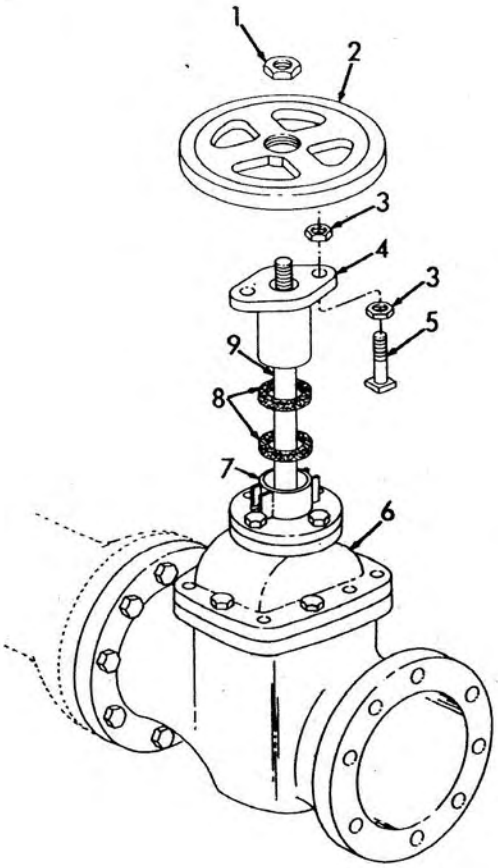

EMC 5-1450-200-20/22

1 Nut, brass, 3/8-11
2 Handwheel
3 Nut, 1/2-13 (4 rqr)
4 Packing gland
5 Bolt, adjusting, 1/2-13 × 3-3/4 in. (2 rqr)
6 Valve body
7 Stuffing box
8 Packing
9 Stem

Figure 3-25. Typical 3- or 4-inch shutoff valve handwheel and packing removal.

c. Cleaning, Inspection, and Repair.

(1) Clean shutoff valve with potable water.

(2) Inspect handwheel for cracks or breaks. Replace a damaged handwheel.

(3) Inspect packing gland for cracks, breaks, or other damage. Replace a damaged packing gland.

(4) Inspect packing box for cracks or breaks. Replace a damaged packing box.

(5) Inspect packing for wear. Replace worn packing.

(6) Inspect all mounting hardware for damage. Replace any damaged mounting hardware.

d. Installation.

(1) Position new packing (8) in stuffing box (7).

(2) Position adjusting bolts (5) in stuffing box (7) and secure adjusting bolts with two nuts (3).

(3) Position packing gland (4) down over stem (9) and on adjusting bolts (5) and secure with two adjusting nuts (3).

(4) Position handwheel (2) on stem (9) and secure with handwheel nut (1).

3-116. 1/2-Inch, 3/4-Inch, 1-Inch, and 2-Inch Manual Valves

a. General. A series of manually controlled globe or gate valves is used in the hydraulic system to restrict and control hydraulic flow. The valves are identical, except for size, and all contain preformed packing. This valve group includes the door shutoff valves (4 and 5, fig. 3-26), locking bar shutoff valves (1 and 2), door drain valves (7 and 8), filter and flushing valve (9), reservoir drain valve (6, fig. 3-24), and sediment tube valves (11).

b. Removal.

(1) Remove handwheel nut (1, fig. 3-27) from stem (6).

(2) Remove handwheel (2) from stem (6).

(3) Remove packing nut (3) from valve body (7).

(4) Remove packing gland (4) from valve body.

(5) Remove packing (5) from valve body.

c. Cleaning, Inspection, and Repair.

(1) Clean valve with an approved potable water.

(2) Inspect packing for wear. Replace worn or defective packing.

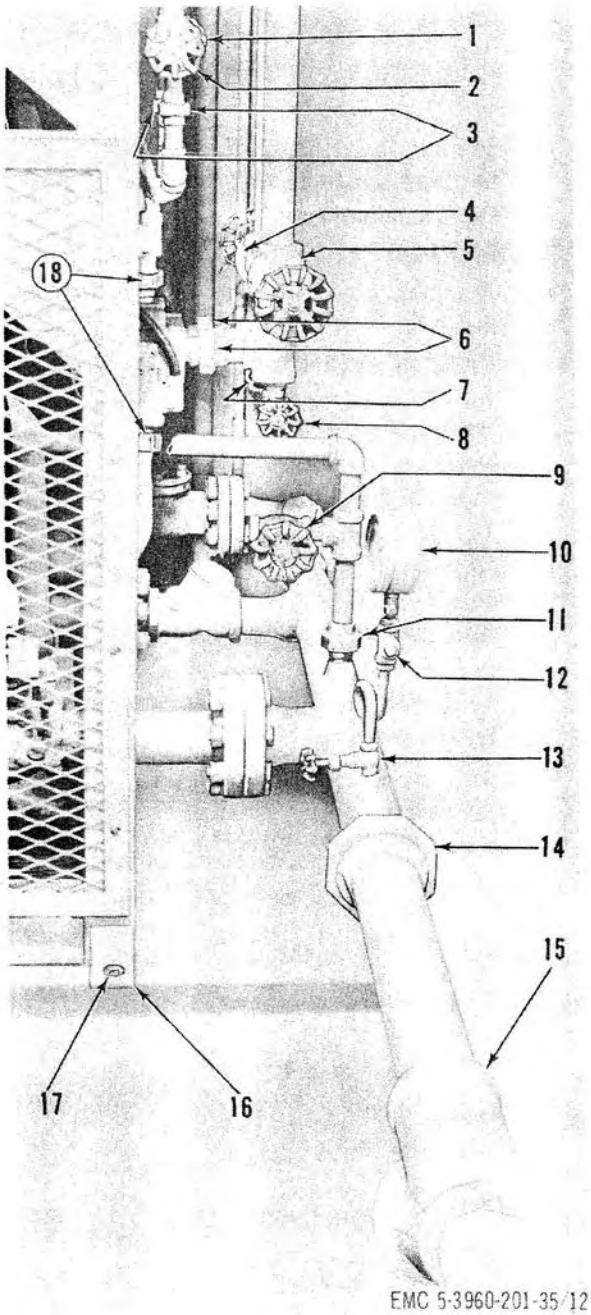

1 Locking bar shutoff valve, rod end
2 Locking bar shutoff valve, head end
3 Union, 3/4 in.
4 Door shutoff valve, head end
5 Door shutoff valve, rod end
6 Union, 1-1/2 in.
7 Drain valve, head end
8 Drain valve, rod end
9 Filtering and flushing valve
10 Pressure gage
11 Union, 1 in.
12 Pipe tee with plug
13 Pressure gage shutoff valve
14 Union, 3 in.
15 Line strainer
16 Mounting flange
17 Lag bolt
18 Union, 2-1/2 in. (2 rqr)

Figure 3-26—Continued.

Figure 3-26. Power unit manual shutoff valves, installed view.

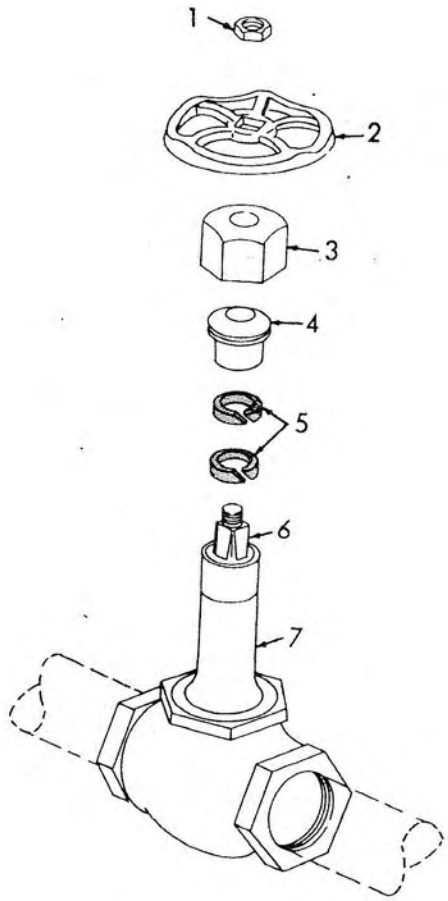

EMC 5-1450-200-20/23

1 Handwheel nut 3/8-16
2 Handwheel
3 Packing nut
4 Packing gland
5 Packing
6 Stem
7 Valve body

Figure 3-27. Manual valve, partially exploded view.

(3) Inspect handwheel for cracks or breaks. Replace a damaged handwheel.

(4) Inspect packing nut for excessive wear. Replace as necessary.

(5) Inspect handwheel nut for stripped or burred threads. Replace a defective nut.

d. Installation.

(1) Position packing (5) in valve body (7).

(2) Position packing gland (4) down over stem (6) against the packing.

(3) Install packing nut (3) and secure it to the valve body (7).

(4) Position handwheel (2) on stem (6).

(5) Install handwheel nut (1) on stem (6) and secure.

3-117. Line Strainer

a. Removal.

(1) Shut off the power to elevator.

(2) Close 3-inch shutoff valve (1, fig. 3-14) and 4-inch shutoff valve (14).

(3) Remove pipe plug (6, fig. 3-28) from end cover (5) and drain the oil from manifold (2).

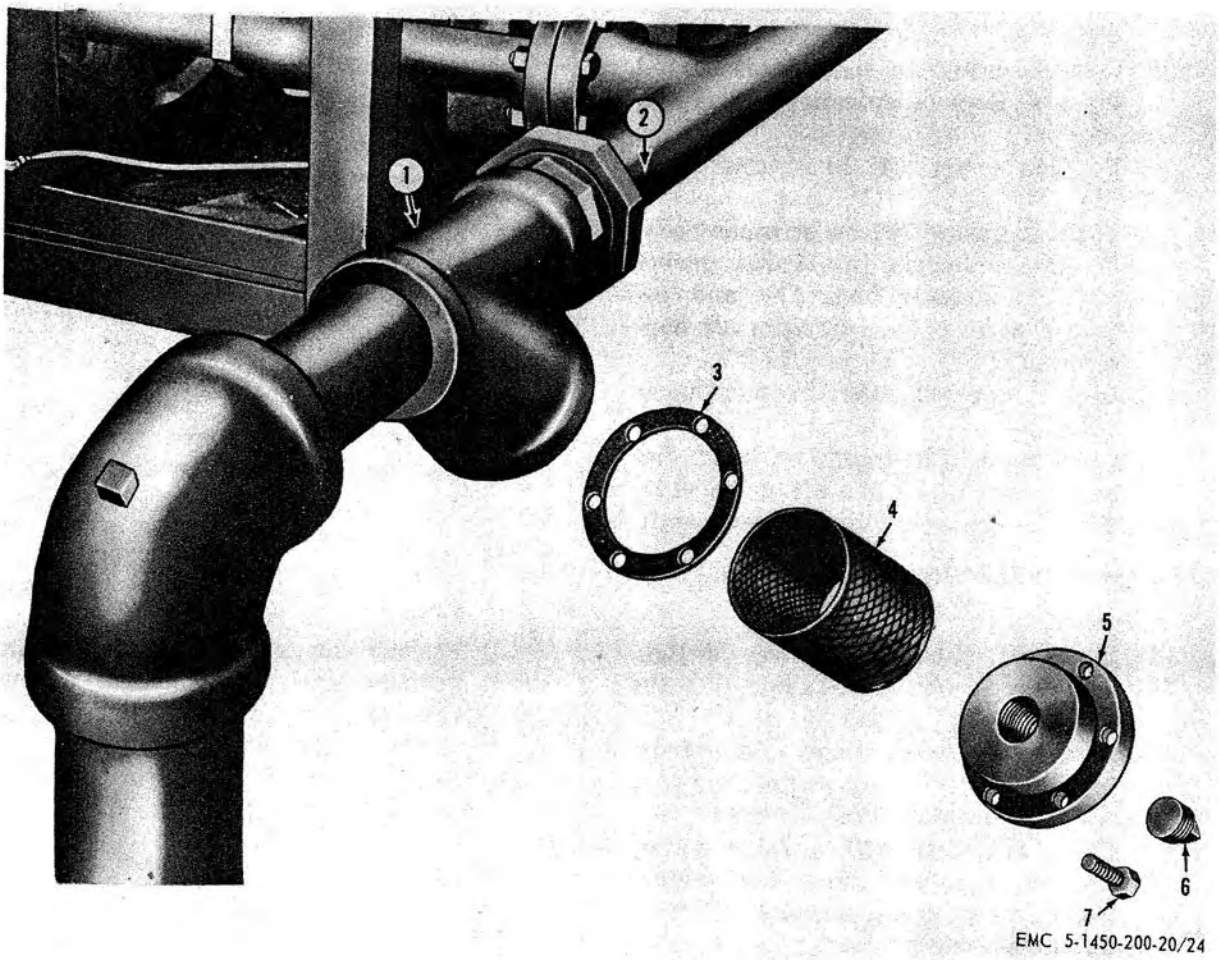

1 Strainer body
2 Manifold
3 Gasket
4 Screen
5 End cover
6 Pipe plug
7 Screw, cap, 1/2-13 × 1-1/2 in. (6 rqr)

Figure 3-28. Line strainer, removal and installation.

(4) Remove six capscrews (7) securing end cover (5) to strainer body (1).
(5) Remove end cover (5), screen (4), and gasket (3) from strainer body (1).

b. Cleaning, Inspection, and Repair.
(1) Clean all parts with potable water.
(2) Inspect screen for cracks or excessive wear. Replace a defective screen.
(3) Inspect end cover for cracks or breaks. Replace a damaged end cover.
(4) Inspect gasket for breaks or excessive wear. Replace a damaged or excessively worn gasket.
(5) Inspect pipe plug for damaged threads. Replace a damaged pipe plug.
(6) Inspect screws for stripped or burred threads. Replace defective capscrews.

c. Installation.
(1) Position screen (4) in strainer body (1).
(2) Position gasket (3) on strainer body.
(3) Position end cover (5) against gasket (3) and strainer body (1) and secure end cover to body with six capscrews (7).
(4) Install pipe plug (6) in end cover (5).
(5) Open the 3-inch shutoff valve (1, fig. 3-14) and 4-inch shutoff valve (14).
(6) Turn on the power to the power unit.

3-118. Hydraulic Fluid Pressure Gage

a. Removal.
(1) Shut off the main power switch.
(2) Close pressure gage shutoff valve (13, fig. 3-26).
(3) Remove pressure gage (10) from pipe tee (12).

b. Cleaning, Inspection, and Repair.
(1) Clean all parts with potable water.
(2) Inspect pressure gage for proper working condition. Replace a defective pressure gage.
(3) Inspect pressure gage glass for cracks or breaks. Replace a cracked or broken gage glass.
(4) Inspect mounting hardware for damage. Replace all damaged mounting hardware.

c. Installation.
(1) Install pressure gage (10) on pipe tee (12).
(2) Open pressure gage shutoff valve (13).
(3) Open the main power switch.

3-119. Fluid Level Gage

a. Removal.
(1) Start power unit and run the elevator platform up to ground level so as to bring the fluid below the level gage.
(2) Remove four screws securing the level gage (17, fig. 3-24) to reservoir (16).
(3) Remove level gage ring, gasket, and viewing port glass from power unit.

b. Cleaning, Inspection, and Repair.
(1) Clean all parts with potable water.
(2) Inspect viewing port glass for cracks or breaks. Replace a cracked or broken viewing port glass.
(3) Inspect level gage ring for cracks or breaks. Replace a cracked or broken level gage ring.
(4) Replace the level ring gasket.
(5) Inspect level ring mounting screws for stripped or burred threads. Replace any level gage mounting screws with stripped or burred threads.

c. Installation.
(1) Position the viewing port glass over hole in the reservoir.
(2) Position the gasket on sight level ring
(3) Position level ring and gasket over viewing port glass and secure to reservoir (16) with four screws.
(4) Lower elevator platform onto the pedestals and check the fluid level

3-120. Sediment Tube

a. Removal.
(1) Close the two valves (12 and 13, fig 3-24).
(2) Open the drain cock at valve (13 and drain off the fluid from sedimen tube (9).
(3) Remove two rod guards (8).

(4) Loosen two coupling nuts (7 and 10) and slide them away from valves (12 and 13).
(5) Remove tube (9) from the two valves making sure not to disturb the packing in the coupling nuts. Slide the nuts off the tube.

b. Cleaning, Inspection, and Repair.
(1) Clean all parts with potable water.
(2) Inspect tube for cracks or chips. Replace a cracked or chipped tube.
(3) Inspect coupling nuts and packing for excessive wear or damage. Replace damaged coupling nuts and packing as necessary.

c. Installation.
(1) Position couplings nuts (7 and 10) and packing on tube (9).
(2) Position tube (9) between the two valves (12 and 13).
(3) Slide the two coupling nuts (7 and 10) into position on the two valves and secure.
(4) Install two rod guards (8), close draincock at valve (13), and open valves (12 and 13).

3-121. Drip Pan

a. Removal.
(1) Remove two capscrews (7, fig. 3-20) and washers from drip pan (10).
(2) Remove drip pan (10) from plunger and cylinder assembly (2).
(3) Remove drain plug (9) from drip pan (10).

b. Cleaning, Inspection, and Repair.
(1) Clean all parts with potable water.
(2) Inspect drip pan for cracks, breaks, or other damage. Replace as necessary.
(3) Inspect drain plug for stripped or burred threads. Replace as necessary.
(4) Inspect all mounting hardware for damage. Replace all damaged mounting hardware as necessary.

c. Installation.
(1) Position drip pan (10) on plunger and cylinder assembly (2).
(2) Install two lockwashers and capscrews (7) and secure drip pan to main cylinder assembly.
(3) Install drain plug (9) in drip pan (10).

3-122. Rubber Hose

a. Hydraulic Hose. Hydraulic hose to the locking bar cylinders (7, fig. 3-9) and to the door cylinder (3, fig. 3-8) have male threaded coupling ends. Replace a worn hydraulic hose by unscrewing both ends at connections and installing a new hose.

b. Door Drain Hose. Door drain hoses are secured with O-clamps. Remove a worn drain hose by loosening the two screws in the clamps and twisting the hose at the connection to break the seal. Install a new drain hose by positioning the hose clamp on the drain hose, installing the drain hose on the connection in the elbow, and tighten the two screws in the O-clamps.

3-123. Pipe Clamps and Hangers

a. Removal.
(1) Remove lag bolts (11, fig. 3-8) from hanger (10).
(2) After lag bolts (11) have been removed, spread hanger (10) apart and remove hanger from hydraulic piping.
(3) Repeat above procedure for removing remaining hangers.

b. Cleaning, Inspection, and Repair.
(1) Clean all parts with potable water.
(2) Inspect hangers for cracks, breaks, or other damage. Replace a defective hanger.
(3) Inspect lag screws for damage or excessive wear. Replace a damaged or excessively worn lag screw.
(4) Inspect expansion shields for breaks or excessive wear. Replace a cracked or excessively worn expansion shield.

c. Installation.
(1) Position hanger (10) on the hydraulic piping.
(2) Install lagbolts (11) and secure hanger (10) to the magazine wall.

(3) Repeat above procedure in installing remaining hangers.

3-124. Filter Dry Type Vent

a. Removal.

(1) Unscrew wingbolt (1, fig. 3-29) from connector (4).
(2) Remove wingbolt (1) and cover (2) from body (3).
(3) Remove body (3) from connector (4).

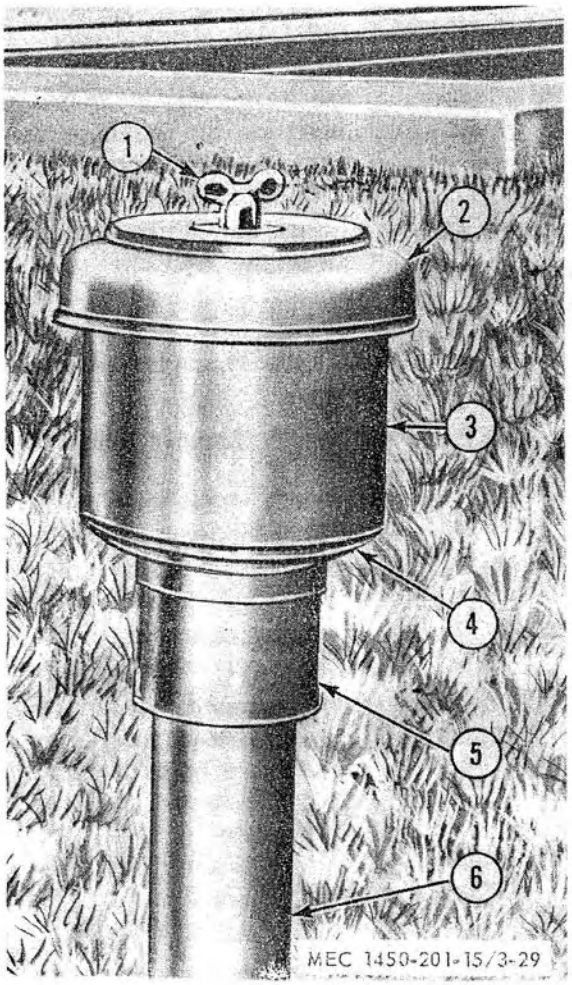

1 Wingbolt
2 Cover
3 Body
4 Connector
5 Threaded coupling
6 Vent pipe

Figure 3-29. Dry air vent, removal and installation.

(4) Unscrew and remove connector (4) from threaded coupling (5) and vent pipe (6).

b. Cleaning, Inspection, and Repair.

(1) Clean all parts with potable water.
(2) Inspect cover for dents, bends, or breaks. Replace a damaged cover.
(3) Inspect body for bends, dents, or other damage. Replace a damaged body.
(4) Inspect wingbolt for bends, or stripped or burred threads. Replace a damaged wingbolt.
(5) Inspect connector for cracks or burred threads. Replace a damaged connector.

c. Installation.

(1) Install connector (4) in threaded coupling (5) and vent pipe (6).
(2) Position body (3) on connector (4).
(3) Position cover (2) on body (3) and secure cover and body to connector with wingbolt (1).

3-125. Air Bleeding Cylinders

a. General. If erratic performance or damage to the equipment is evidenced after trouble in electrical and hydraulic components have been eliminated, malfunction of the equipment may be caused by air trapped in the hydraulic system. Air may enter the hydraulic system during the changing of the fluid or during removal or repalcement of valves and associated piping. Air bleeding is performed at the main cylinder, door cylinder, and locking bar cylinder. Bleeding the equipment at any or several of these locations can remove any air which has entered the system.

b. Bleeding Main Cylinder.

(1) Place platform on pedestals.
(2) Close all manual shutoff valves on power unit except the 4-inch valve (14, fig. 3-14) on the side of pump No. 2.
(3) Remove plug (13, fig. 3-20) from 1/2-inch drain valve (12).
(4) Open 1/2-inch drain valve (12) at base of main cylinder.
(5) Rotate pump No. 2 in its functional clockwise direction, by hand, until a

steady stream of hydraulic fluid flows from 1/2-inch valve.

(6) Close drain valve (12) and replace plug (13). Open all manual valves in power unit.

c. *Bleeding Locking Bar Cylinders.*

(1) With locking bars retracted, raise elevator platform about 4 feet above the pedestals.

(2) Open upper cylinder bleeder (11, fig. 3–9) on the rod end of each locking bar cylinder.

(3) Remove the rubber plug in the coil cover plate on the 4-way locking bar retract solenoid valve (22, fig. 3–22). Insert a screwdriver through this hole and press upward until you hear the valve operate. The valve must be held in this position until all cylinders are air bled at the rod end.

(4) When a clean, steady stream of fluid flows through the bleeder valve, the valve should be closed and tightened.

(5) When the cylinders are bled, allow the 4-way solenoid valve to close, then replace the rubber plug.

(6) Open the lower cylinder bleeder (11, fig. 3–9) at the head end of each of the locking bar cylinders.

(7) Close the locking bar shutoff valve (1, fig. 3–26) in the line to the rod end of the locking bar cylinders to keep them in full retracted position while bleeding the head end.

(8) Remove the rubber plug under the 4-way locking bar engaging solenoid valve and shift the locking bar 4-way valve as in (3), (4), and (5) above.

Note. Bleeding of the hydraulic cylinders can be accomplished more quickly and efficiently if the valves in the lines to the cylinders being bled are throttled to reduce bleeding pressures and flow. Turbulence in the cylinders is thus reduced, resulting in less air-oil mixture to be bled off.

d. *Bleeding Door Cylinders.*

(1) Raise the elevator about 4 feet off the pedestals with the doors open.

(2) Connect a high pressure hose from the filter and flushing valve (9) in the unit to the door drain valve (8) on the door supply line feeding on the rod end of the door cylinders.

(3) Open bleed valve on the rod end of the cylinders. (3, fig. 3–8). Provide a container at each cylinder to catch the flow during the bleeding operation.

Note. To open bleed valve, screw out several turns.

(4) Open both the flushing valve (9, fig. 3–26) and the door drain valve (8).

(5) When a clear, steady stream of oil flows out of the lower bleeder valve, it should be screwed down by hand and tightened with a wrench.

(6) Close the flushing valve (9) and drain valve (8).

(7) Change connection of the line from the filter and flushing valve (9) to the door drain valve (7) feeding the head end of the door cylinders.

(8) Open the bleed valve at the head end of the cylinders (3, fig. 3–8) with a wrench.

(9) Open the filter and flushing valve (9, fig. 3–26) and the door drain valve (7) in the door line.

(10) When a steady stream of oil flows from the bleeder valve, it should be closed and tightened.

(11) Close the filter and flushing valve (9) and door drain valve (7), and remove the bleeder hose.

3–126. Door Adjustments

a. General. When the door CLOSE button is depressed, if cylinders do not act uniformly, having a tendency to cause the doors to twist or bind, equalize fluid flow by adjusting the flow control valves (9, fig. 3–8). If door closing is not synchronized, adjustment of the balancing valves is required to equalize flow of hydraulic fluid to each door.

b. *Flow Control Valve Adjustment.*

(1) Operate door CLOSE button to determine the slow reacting cylinder causing the door to twise or bind.

(2) Adjust flow control valve (9) in the following manner:

(*a*) Remove acorn nut (1, fig. 3–23) and loosen valve stem locknut (3).

(*b*) Increase fluid flow to the slow cylinder by turning valve stem (6) counterclockwise.

(*c*) If increased flow to the slow cylinder does not correct the condition, reduce flow to the fast cylinder by turning valve stem (6) clockwise.

(*d*) Adjust all cylinders on each door, to eliminate binding or twisting.

c. Door Balancing Valve Adjustment.

(1) Fully open both balancing valves (8, fig. 1-3).

(2) Throttle fluid flow to the fast door by partially closing the balancing valve to the appropriate door.

(3) Repeat this throttling until the doors are properly synchronized.

Section VII. MECHANICAL SYSTEM

2-127. General

The mechanical system consists of components not directly actuated by either hydraulic fluid flow or electrical current flow. This includes the equalizer assembly, guide rail assembly, elevator doors, and locking bar linkage, leveling pedestals, buffer pedestals, and power unit drive components. The equalizer cable system compensates for the unbalanced loads on the platform and maintains the off centered elevator during its travel both up and down. Four equalizer wire ropes are looped under and over the four equalizer pulleys, two on either side of the elevator chassis frame. The guide rail consists of two vertical double V-shaped guide rails and 8-rigid casters. Door seals installed around the opening at ground level and along the door center edges, provide weather protection for the magazine area. Four leveling pedestals installed on the pit section floor, allow the elevator to come to a rest at its lowest position. Two buffer pedestals, installed in the pit section at the base of the main cylinder, cushion the elevator impact upon the leveling pedestals. Four pulleys, each connected to a respective pump or motor, furnish mechanical drive to transfer power from the two electric motors to the pumps. The V-belts that are used in the power unit drive are heavy duty, V-type belts in matching sets.

3-128. Equalizer Cable

a. General. The prime purpose of adjusting the equalizer cable (14, fig. 1-3) is to keep the cable equally stressed and to maintain the elevator platform in a level position as it moves up or down. Maximum efficiency can be obtained when the cable tension is adjusted uniformly on both sides of the elevator platform. Positive indication of equal cable stress is when the cables cross one another midway the length of the elevator platform at 6 3/4 inches below the chassis I-beams. By adjusting the equalizer adjusting eyebolts, the elevator platform can be properly leveled and the cable uniformly stressed for operation.

b. Equalizer Cable Stress Adjustment.

(1) Open the elevator doors.

(2) Momentarily press the elevator UP button to raise the platform. When the platform reaches the level where the equalizer cables are accessible from the magazine floor, press the STOP button.

(3) Measure the distance between the bottom of the chassis frame (15) I-beam and the intersecting point of the equalizer cable (14). Correct distance should be 6-3/4 inches. Check visually to see if the cables intersect midway the length of the elevator platform.

(4) Slacken or tighten the upper end of the cable (14) by adjusting nuts (11, fig. 3-12) on eyebolts (9).

(5) Repeat the above procedure for the remaining three equalizer cables.

Note. Be sure all cables are tightened uniformly to the 6 3/4-inch measurement.

c. Equalizer Cable Adjustment to Level Elevator.

(1) If one corner of the elevator platform is low and the opposite side is level on full length, tighten cable (4, fig. 3-11) on the low corner side and

loosen the other cable on the same equalizer pulley (7, fig. 3-11).

(2) If one corner is high, loosen the corresponding cable and tighten the other on the same equalizer pulley.

(3) If the elevator platform is not level and both corners of one end of the platform are to be raised or lowered, tighten or slacken one cable on each side of the platform.

d. Removal.

(1) Lower elevator platform on I-beam placed across pit opening at magazine floor level.

(2) Remove eight equalizer eyebolts (4, fig. 3-30) by removing nuts (5) from tie angles (1).

(3) Remove wire rope clip (3) from the ends of the four equalizer cables (12).

(4) Remove cables (12) from the tie angles and equalizer sheaves.

e. Cleaning, Inspection, and Repair.

(1) Clean parts with approved cleaning solvent and dry thoroughly.

(2) Inspect equalizer cable for broken or frayed strands. Replace a defective cable.

(3) Inspect bolts and clamps for damage and defects and replace defective parts as necessary.

f. Installation.

(1) With the elevator platform on the I-beams across the pit section, reeve the equalizer cable (12) from top of tie angles (1) down and under sheave grooves, along the length of the elevator chassis, over the top sheave grooves at opposite end of chassis and down to bottom of tie angles.

(2) Place cable eye through eyebolt (4) and squeeze until ends meet.

(3) Insert cable (12) through eyebolt and bend around the cable eye.

(4) Fasten with wire rope clips (3) as close as possible to the cable eye, being sure that U-shaped part bears on the short stub, not on the long cable proper.

Note. Be sure each cable line lies in its own plane when moved from one end or the other and does not cross the path of the adjacent cable.

(5) Place one eyebolt nut (5) on each eyebolt and turn it on as far as possible.

(6) Insert eyebolt through tie angle (1) bracket hole and place remaining eyebolt nut (5) on the eyebolt.

(7) Tighten outer nuts until equalizer cables are tight; then tighten inside nuts against tie angle brackets until they are secure.

Note. When tightening the outer nuts, attempt to achieve a situation in which all eyebolts extend equally through the tie angle brackets. This will facilitate equalizing adjustment.

(8) Adjust the equalizer cable (*b* and c above).

(9) Repeat above procedure to install all equalizer cables.

3-129. Equalizer Sheave

a. Removal.

(1) Remove equalizer cable (par. 3-128).

(2) Remove cotter pins (14, fig. 3-31) from sheave pin (13).

(3) Remove sheave pin (13) and guide bracket (12) from sheave mounting bracket (7).

(4) Remove sheave (8) from mounting bracket.

(5) Repeat above procedure for remaining three sheaves.

b. Cleaning, Inspection, and Repair.

(1) Clean parts with approved cleaning solvent and dry thoroughly.

(2) Inspect all parts for damage and defects or signs of excessive wear and replace defective parts as necessary.

c. Installation.

(1) Position equalizer sheave (8) and guide bracket (12) on mounting bracket.

(2) Install sheave pin (13) through mounting bracket (7), guide bracket (12) and sheave (8) and secure with cotter pins (14).

(3) Install equalizer cable (par. 3-128).

(4) Repeat above procedure to install the three remaining equalizer sheaves.

3-130. Stop Pads

a. Removal.

(1) Close elevator doors (par. 2-10).

(2) *Hydraulic pump No. 2.*

(*a*) *Type B and C.*

Manufacturer	Worthington corp.
Model	4 GRWMI
Capacity	208 gpm
Drive	4 V-Belts

(*b*) *Type B–4, B–5, and D.*

Manufacturer	Worthington Corp.
Model	4 GRWMI Modified
Capacity	175 gpm
Drive	5 V-Belts

(3) *Electric motor No. 1.*

(*a*) *Type B and C.*

Manufacturer	Imperial Electric Co.
Frame	E324U
Phase	3
Ampere	39
Cycle	60
RPM (Revolutions per minute)	1700
HP (Horsepower)	30
Voltage	416

(*b*) *Type B–4, B–5.*

Manufacturer	Imperial Electric Co.
Frame	R326U
Phase	3
Ampere	58
Cycle	60
RPM	1710
HP	45
Voltage	416

(*c*) *Type B–4, B–5.*

Manufacturer	Westinghouse Electric Co.
Frame	326U
Phase	3
Ampere	58
Cycle	60
RPM	1750
HP	40 hp, continuous, 80 hp intermittent
Voltage	416

(*d*) *Type D.*

Manufacturer	Westinghouse Electric Corp.
Model	ABDP
HP	40
Duty	Cont. 40, Intermittent, 80
Series	49
Cycles	60
Volt	416
Phase	3
RPM	1705

(4) *Electric motor No. 2.*

(*a*) *Type B and C.*

Manufacturer	Imperial Electric Co.
Frame	E324U
Phase	3
Ampere	39
Cycle	60
RPM	1700
HP	30
Voltage	416

(*b*) *Type B–4, B–5.*

Manufacturer	Imperial Electric Co.
Frame	R326U.
Phase	3
Ampere	58
Cycle	60
RPM	1710
HP	45
Voltage	416

(*c*) *Type B–4, B–5.*

Manufacturer	Westinghouse Electric Co.
Frame	326U
Phase	3
Ampere	58
Cycle	60
RPM	1750
HP	40 hp continuous, 80 hp intermittent
Voltage	416

(*d*) *Type D.*

Manufacturer	Westinghouse Electric Corp.
Model	ABDP
HP	40
Duty	Cont. 40, Intermittent, 80
Series	49
Cycles	60
Volt	416
Phase	3
RPM	1705

Note. The No. 1 and No. 2 electri motors on the individual power units a identical except for the junction boxes. sufficient room is available, and lengt of conduit is also available, it makes difference which side of the motor t junction box is on. The motors can changed from No. 1 motor to No. 2 mot by removing the end bells and switchi the rotor to the other end or vise vers as required.

Note. Westinghouse and Imperial ele tric motors are both used on B–4, a B–5 elevators. When requisitioning, addition to FSN, specify the make a model on the motor identification pla

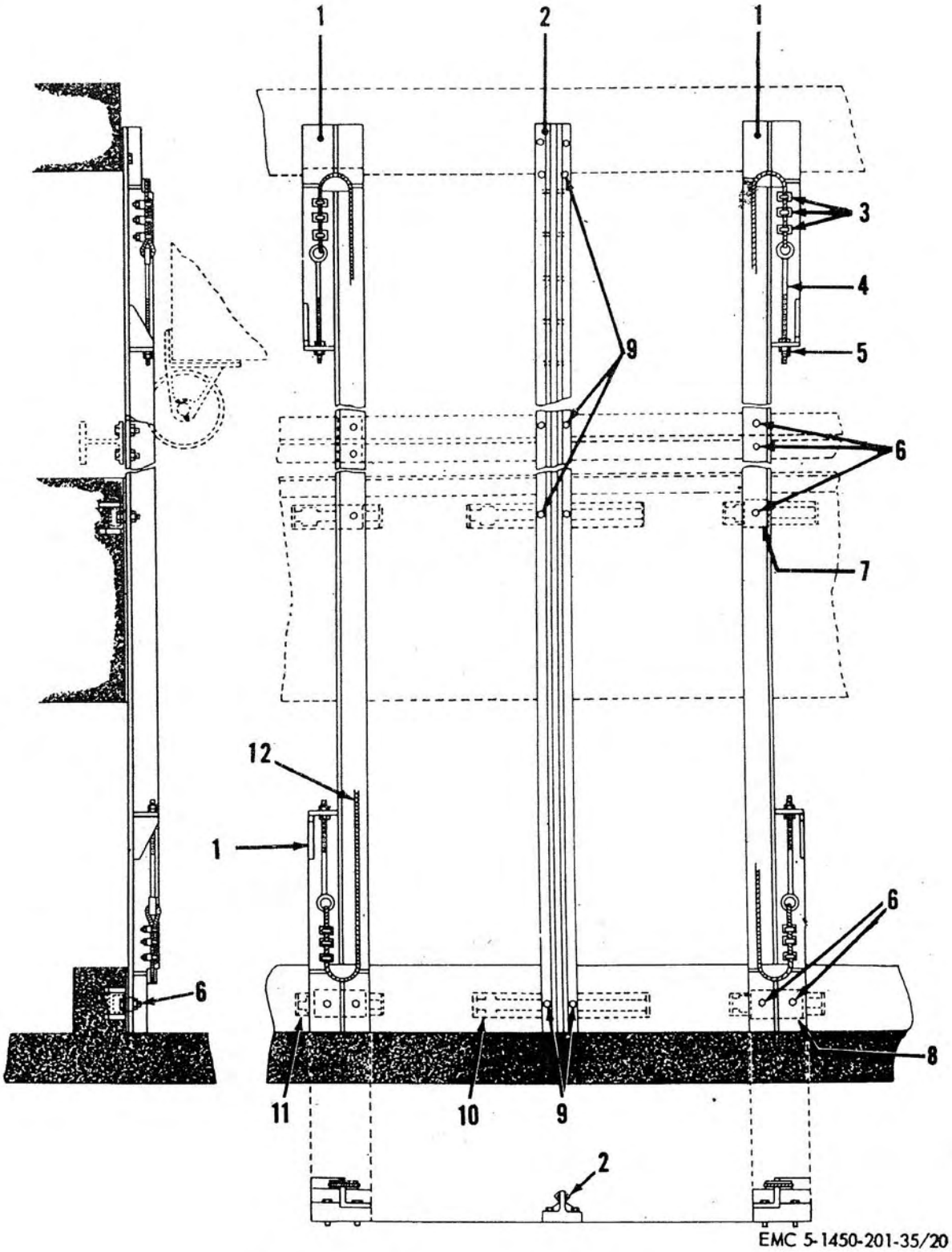

Figure 3-30. Guide rails and equalizer assembly.

1 Tie angle (4 rqr)
2 Guide rail
3 Wire rope clip (2 rqr)
4 Eyebolt (4 rqr)
5 Nut, 1-8 (8 rqr)
6 Bolt, 3/8-16 × 1 in. (10 rqr)
7 Shim (as rqr)
8 Shim (as rqr)
9 Bolt, 3/8-16 × 1-1/2 in. (10 rqr)
10 Guide rail insert
11 Tie angle insert
12 Equalizer cable

Figure 3-30—Continued.

(2) Remove 2 nuts (7, fig. 3-8) and lockwashers.

(3) Remove stop pad (8) and stop pad plate from door hinge stop.

(4) Repeat above procedure for removal of remaining stop pads.

Note. If necessary, remove the cotter pins (9, fig. 3-9) from locking bar hinge pins (8).

b. Cleaning, Inspection, and Repair.

(1) Clean parts with approved cleaning solvent and dry thoroughly.

(2) Inspect stop pad to see that it is cemented securely to the stop plate. Replace if loose.

(3) Inspect pivot pins for damaged or missing cotter pins. Inspect all hardware for damaged threads.

(4) Replace all defective or missing parts as necessary.

c. Installation.

(1) Position door stop pad (8, fig. 3-8) and stop pad plate on the door hinge stop.

(2) Install 2 lockwashers and nuts (6) to secure the stop pads and plate to the door hinge stop.

(3) Open doors and check to see that the doors rest on the stop pads.

(4) Repeat above procedure to install the remaining door stop pads.

Note. If cotter pins (9, fig. 3-9) were removed, install in hinge pins (8).

3-131. Leveling Pedestal

a. General. The four leveling pedestals installed in the pit section of the installation are held secure by four imbedded anchor bolts, and nuts, extending from the pit floor through the base plate assembly. The leveling jackscrew is locked in position by two screws and a lock collar at the neck of the pedestal extension pipe. The leveling pedestal can be adjusted to the high position, 13 inches below the magazine floor, in the pit section, with pedestal extension pipe (16, fig. 3-32) fully extended, or the low position, 2 feet 6 inches below the magazine floor with pedestal extension pipe retracted. For either position, the leveling jackscrew (13) is used for final and accurate adjustment as described below. The normal position of the elevator platform in the pit is resting on the pedestals set to their *high* position. The *low* position of the pedestals was a design provision for future use and is not presently used.

b. Adjustment.

(1) With the aid of an assistant, extend a straight edge from the ledge of the magazine floor directly over the leveling pedestal.

(2) Measure distance between leveling jackscrews and straight edge to determine direction of adjustment.

(3) Remove two capscrews (14) and lockwashers from locking collar (15).

(4) Insert a steel rod in leveling jackscrew (13). Turn clockwise to lower screw or counterclockwise to raise screw.

(5) When correct position has been obtained, install the two lockwashers and capscrews (14) in locking collar (15).

(6) Repeat procedure above the remaining three leveling pedestals in the pit section. All pedestals must be at same position before lowering the elevator.

(7) Lower the elevator platform to the "low" position. Observe if the elevator platform settles evenly on all four pedestals. Repeat above procedure if necessary.

(8) Close the elevator doors.

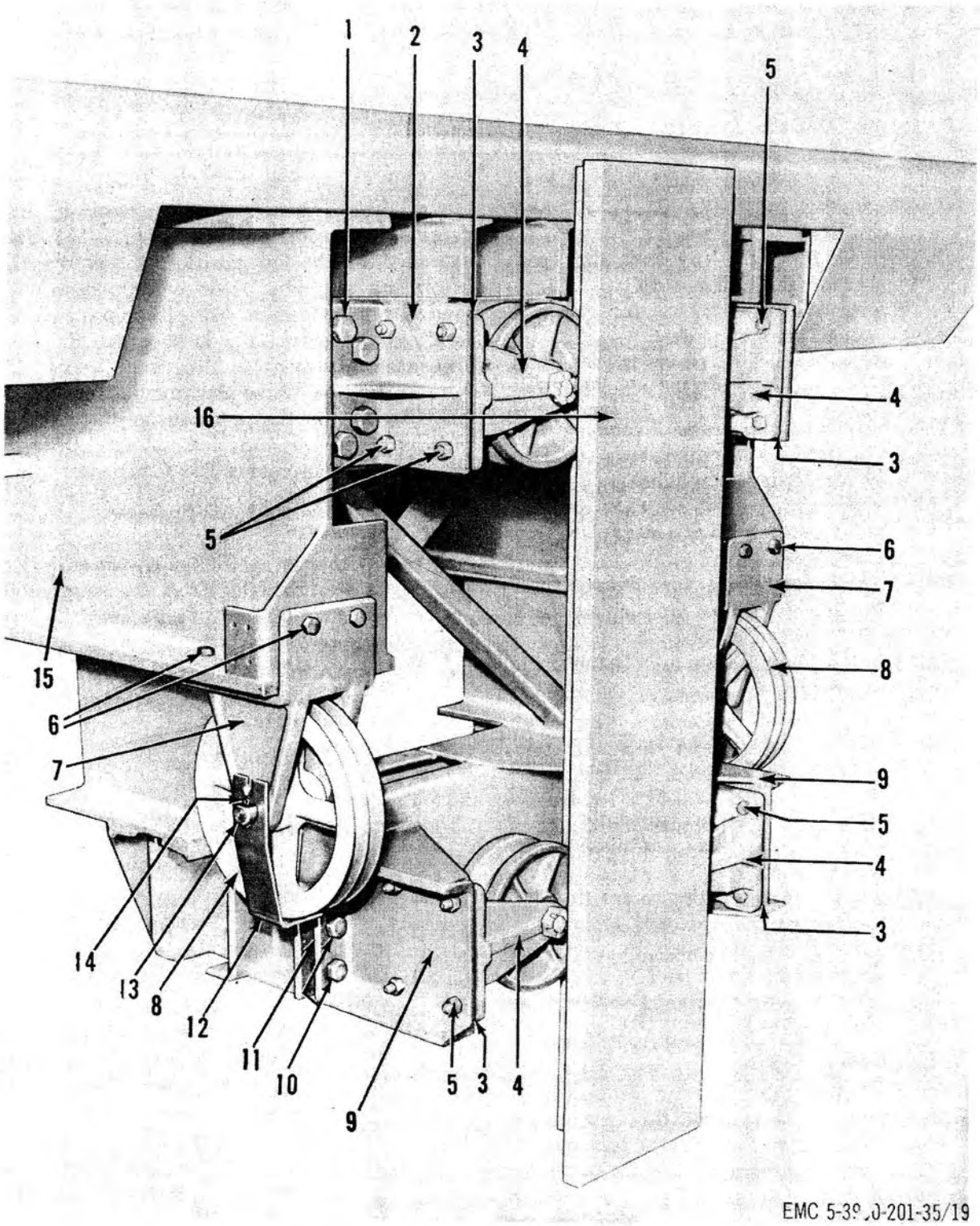

Figure 3-31. Equalizer sheave and bracket, removal and installation.

1 Bolt, 1-14 × 3 in. (8 rqr)
2 Upper caster bracket
3 Caster shim
4 Caster assembly
5 Bolt, 5/8-11 × 2-1/4 in. (16 rqr)
6 Bolt, 5/8-11 × 2 in. (6 rqr)
7 Sheave bracket
8 Sheave
9 Lower caster bracket
10 Bolt, 7/8-9 × 3 in. (4 rqr)
11 Shim (as rqr)
12 Guide bracket
13 Sheave pin
14 Cotter pin
15 Chassis frame
16 Guide rail assembly

Figure 3-31—Continued.

c. Removal.

(1) Raise the elevator platform.

(2) Remove four nuts (12) from anchor bolts (21).

(3) Lift leveling pedestals up off anchor bolts (21).

d. Cleaning, Inspection and Repair.

(1) Clean all parts with an approved cleaning solvent.

(2) Inspect leveling pedestal base plate assembly for cracks or breaks. Replace a damaged pedestal base plate assembly.

(3) Inspect extension pipe assembly for cracks or breaks. Replace a damaged extension pipe assembly.

(4) Inspect jackscrew for stripped or burred threads. Replace a stripped or burred jackscrew as necessary.

(5) Inspect headless pin for excessive wear. Replace an excessively worn headless pin.

(6) Inspect all mounting hardware for damage. Replace any damaged mounting hardware as necessary.

e. Installation.

(1) Place 2 x 4 blocking between the anchor bolts (21) on which the leveling pedestal is to be installed.

(2) With the aid of an assistant, place the leveling pedestal on the blocking with the small gusset of the base plate assembly (20) facing the center of the pit section. Slide leveling pedestal on the blocking to aline holes in the base plate assembly (20) with anchor bolts (21).

(3) Remove blocking so as to allow seating of the leveling pedestal on the anchor bolts (21).

(4) Install the four nuts (12) on the anchor bolts (21) and secure.

3-132. Buffer Leveling Pedestal

a. General. The buffer-type pedestal is hydraulic and is used with the leveling pedestals to absorb the shock of the elevator platform when the elevator platform DOWN button is depressed and the elevator platform comes to rest on the pedestals in the pit section. When the elevator DOWN button is depressed and elevator platform strikes the low limit switch the elevator platform then slows down and strikes the buffer-type pedestal which absorbs the shock, and the platform comes to rest on the leveling pedestals.

b. Adjustment. The buffer-type pedestal can be adjusted by loosening the setscrew (2, fig. 3-32) on the buffer cap (1) and screwing the buffer cap either up or down, or by screwing the extension (9) and piston rod (3) either up or down until the proper adjustment is reached. Make sure the cylinder (8) is full of hydraulic fluid.

c. Removal.

(1) Raise the elevator platform.

(2) Remove four nuts (12) from anchor bolts (11).

(3) Lift buffer pedestal up of the anchor bolts.

d. Cleaning, Inspection, and Repair.

(1) Clean all parts with an approved cleaning solvent.

(2) Inspect buffer pedestal for oil leaks, cracks, or broken welds. Replace a leaking, cracked, or broken buffer pedestal as necessary.

(3) Inspect mounting hardware for damage. Replace all damaged mounting hardware as necessary.

e. Installation.

(1) Place 2 x 4 blocking in the center of the grout on which the buffer pedestal is to be installed

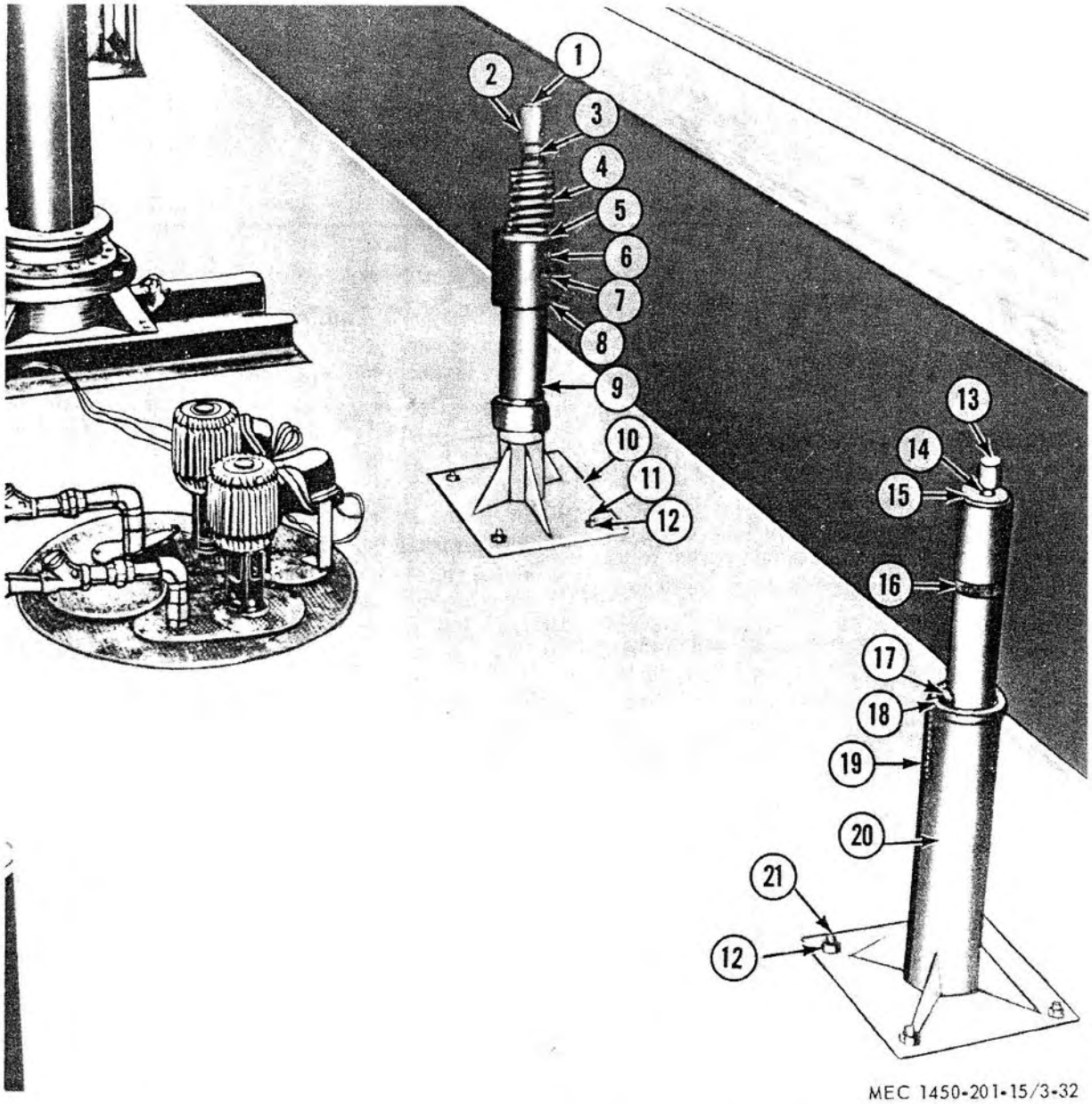

1 Buffer cap
2 Setscrew, 3/8–16 × 1/2 in.
3 Piston rod
4 Buffer spring
5 Cylinder cap
6 Spanner wrench slot
7 Filler plug, 1/8 in.
8 Cylinder
9 Extension
10 Base
11 Bolt, 3/8–10 × 12 in. (4 rqr)
12 Nut, 3/4–10 (8 rqr)
13 Jackscrew
14 Screw, cap, 3/8–16 × 1/2 in. (2 rqr)
15 Jackscrew locking collar
16 Pedestal extension pipe
17 Headless straight pin
18 Screw, 1/4–20 × 1/2 in.
19 Safety chain
20 Pedestal base assembly
21 Bolt, 3/4–10 x 10 in. (4 rqr)

Figure 3–32. Pedestal adjustment, removal and installation.

(2) With the aid of an assistant, place the buffer pedestal on the blocking with the small gusset of the base (10) facing the center or the pit section.
(3) Slide buffer pedestal on the blocking to aline holes in the base plate (20) with the anchor bolts (11).
(4) Remove the blocking to allow seating of the buffer pedestal on the grout.
(5) Install the four nuts (12) on the anchor bolts (11) and secure the buffer pedestal.

3-133. Motor V-Belts

a. Adjustment.

(1) Remove safety guard from power unit.
(2) Loosen nut (12, fig. 3-33) on motor (16).
(3) Turn adjusting screw (13) either clockwise or counterclockwise to obtain the correct adjustment.
(4) V-belts are properly adjusted when they can be depressed approximatley three-fourths of an inch.
(5) After the adjustments have been made, tighten down nuts (12) on motor (16).

b. Removal.

(1) Loosen nut (12) and turn adjustment screw (13) counterclockwise and let the motor (16) slide toward the pump.
(2) Remove V-belts (5) from the motor sheave and pump sheave.

Caution: **Never force or pry V-belts over sheaves. This may permanently damage belts.**

c Cleaning, Inspection, and Repair

(1) Wipe the V-belts clean with a cloth.
(2) Inspect for cracks, frays, or signs of excessive wear and replace a defective V-belts.

Caution: **If one or more V-belts are to be replaced, install a complete new set of matched belts to avoid stretching or breaks.**

d. Installation.

(1) Position V-belts (5) on the motor sheave and pump sheave.
(2) Screw the adjusting screw (13) in to obtain the correct adjustment.
(3) Tighten down nuts (12) on motor (16).
(4) Install the safety guard on the power unit.

3-134. Motor Sheaves

a. General. The motor sheaves (10, fig. 3-33) are constructed of heavy duty cast iron. The sheaves are connected to the motor by a tapered, split-type sheave hub (8) which is keyed to the motor drive shaft (9). The tapered bore of the sheave (10) fits flush on the sheave hub and three screws provide a rigid connection.

b. Removal.

(1) Remove the motor drive V-belts (par. 3-133).
(2) Remove 3 screws (11) and lockwashers securing the sheave (10) to the hub (8).
(3) Screw 2 of the capscrews (11) into the 2 jackscrew holes (7) evenly, until sheave (10) frees itself from the hub (8).
(4) After sheave (10) has been removed from the hub (8), remove the 2 capscrews (11) from the sheave.
(5) Remove socket-head screw (4, fig. 3-34) and lockwashers (3) from hub (6) and remove spacer (10) from the slot.
(6) Remove setscrew (5) from hub (6).

Caution: **Drive a small wedge in the split of the hub to prevent any damage to the hub in driving it off.**

(7) Slide hub (6) off motor drive shaft (1) and key (2).
(8) Repeat steps (1) through (7) above to remove the remaining motor sheave and hub.

c. Cleaning, Inspection, and Repair.

(1) Clean parts with approved cleaning solvent and dry thorughly.

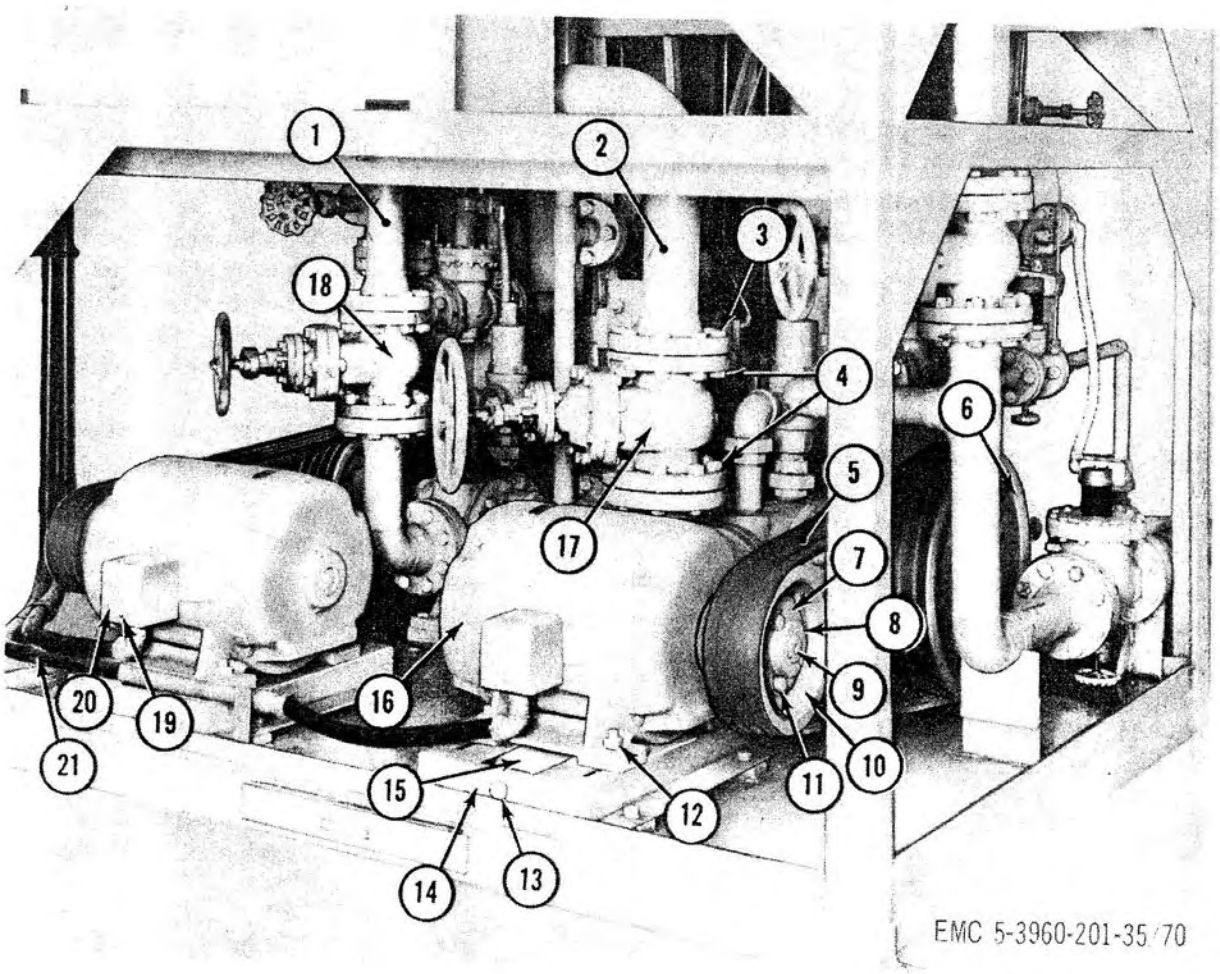

1 Suction manifold, pump No. 1
2 Suction manifold, pump No.2
3 Bolt, 3/4–10 × 3–1/2 in. (8 rqr)
4 Nut, 3/4–10 (8 rqr)
5 V-belt
6 Pump sheave
7 Sheave jackscrew hole
8 Hub
9 Motor drive shaft
10 Motor sheave
11 Screw, cap, 5/8–11 × 2–1/2 in. (3 rqr)
12 Nut, 5/8–11 (4 rqr)
13 Adjustment screw
14 Motor sub-base
15 Motor adjustment frame
16 Motor
17 Gate valve
18 Gate valve
19 Cover screw
20 Junction box cover
21 Conduit

Figure 3–33. Power unit, sheaves and V-belts, installed view.

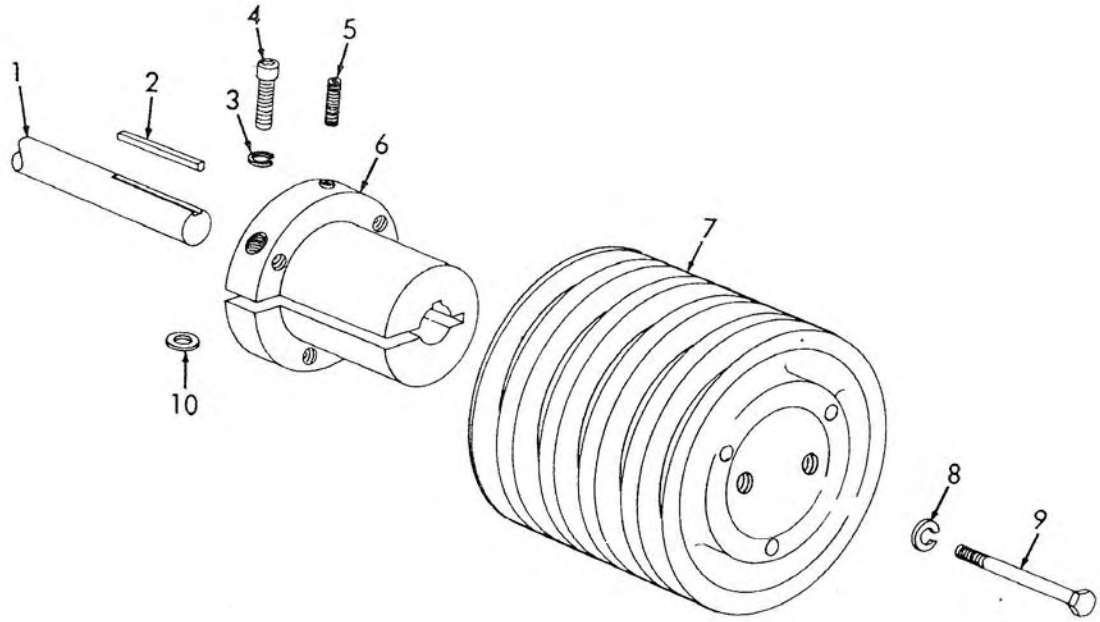

EMC 5-1450-200-20/31

1 Motor drive shaft
2 Key, 1/2 × 1/2 × 4 in.
3 Washer, lock, 3/8 in.
4 Screw, socket-hd, 3/8-16 × 1-1/2 in.
5 Setscrew, 3/8-16 × 1-1/2 in.
6 Pulley hub
7 Groove pulley
8 Washer, lock, 5/8 in. (3 rqr)
9 Screw, cap, 5/8-11 × 2-1/2 in. (3 rqr)
10 Spacer

Figure 3-34. Motor sheave hub, exploded view.

(2) Inspect motor sheave for cracks, breaks, or elongated holes. Replace a defective sheave.

(3) Inspect motor sheave hub for cracks and excessive wear. Replace a defective hub.

(4) Inspect all hardware for defects and repalce all defective parts as necessary.

d. Installation.

(1) Position key (2) in motor drive shaft (1).

(2) Slide hub (6) on shaft (1) and install with spacer (10), lockwasher (3), socket-head screw (4), and setscrew (5).

(3) Position motor sheave (10,fig. 3-33) on hub (8) and secure sheave to hub with three lockwashers and capscrews (11).

(4) Install V-belts (par. 3-133).

(5) Repeat steps (1) through (4) above for installing the remaining motor sheave and hub.

3-135. Pump Sheaves

a. General. The pump sheaves (6, fig. 3-33), of the hydraulic pumps are identical in construction, being constructed of heavy duty cast iron, and reinforced with ribbed recessed arms. The pump sheaves are connected to their respective pumps by a tapered, split type, sheave hub which is keyed to the pump drive shaft. The sheave and sheave hub are taper fitted and clamped together by three capscrews providing rigid connection.

b. Removal.

(1) Remove the V-belts (par. 3-133).

(2) Remove the three capscrews and lockwashers from the pump drive sheave (6).

(3) Install two of the capscrews in the jackscrew holes and screw in evenly until the pump drive sheave slips off the pump drive sheave hub.

(4) Remove the two capscrews from the jackscrew holes.

(5) Removal of the pump drive sheave hub is identical to removal of the motor drive sheave hub (par. 3-134).

c. *Cleaning, Inspection, and Repair.*

(1) Clean all parts with an approved cleaning solvent.

(2) Inspect pump sheaves for cracks, breaks, or elongated holes. Replace a defective pump sheave.

(3) Inspect pump sheave hub for cracks, breaks, or other damage. Replace a defective pump sheave hub.

(4) Inspect all mounting hardware for damage. Replace all defective mounting hardware.

d. *Installation.*

(1) Installation of the pump sheave hub is the same as installation of motor sheave hub (par. 3-134).

(2) Position pump sheave (6) on the pump sheave hub and secure the pump sheave to the hub with the three lockwashers and capscrews.

(3) Install the V-belts (par 3-133).

(4) Repeat (1) through (3) above for installing the remaining pump sheave and hub.

3-136. Elevator Safety Guard Assembly

a. *Removal.*

(1) Remove nine nuts (5, fig. 3-35) from screws (2).

(2) Remove door (1) from hinges (3).

(3) Remove eight capscrews (9) from pit floor angle (10).

(4) Remove screws (11) and separate front panel (6) from side panel (8).

(5) Repeat (1) through (4) above for removing remaining front and side panels.

b. *Cleaning, Inspection, and Repair.*

(1) Clean all parts with an approved cleaning solvent.

(2) Inspect panels for bends or breaks. Straighten out bends and weld breaks as necessary.

(3) Inspect door for bends or breaks. Straighten out bends and weld breaks as necessary.

(4) Replace either a door or panel that is beyond repair.

(5) Inspect door hinges and mounting hardware for damage. Replace a damaged door hinge or any mounting hardware as necessary.

c. *Installation.*

(1) Position front and side panels (6 and 8) on pit floor angle (10) and secure with capscrews (9).

(2) Position side panel (8) and front panel (6) toegther and secure with screws (11).

(3) Position door (1) on hinges (3) and secure with screws (2) and nuts (5).

(4) Repeat (1) through (3) above for installing the remaining front and side panels.

3-137. Caution and Instruction Plates

a. *Removal.*

(1) Remove the two screws in main power breaker switch plate.

(2) Remove the main power switch instruction plate.

(3) Repeat the above prrcedure in removing the instruction plate in the control cabinet.

(4) Remove the four drive screws that secure the identification pl-ate to the power unit.

(5) Repeat (4) above for the removal of the remaining identification plates.

b. *Cleaning, Inspection, and Repair.*

(1) Clean all parts with an approved cleaning solvent.

(2) Inspect the instruction plates for obscured lettering, bends, or other damage. Replace all damaged instruction plates.

(3) Inspect all mounting hardware for damage. Replace all damaged mounting hardware.

c. *Installation.*

(1) Position the main power breaker switch plate on the breaker switch panel and secure with the two screws.

(2) Repeat above procedure in installing the instruction plate in the control cabinet.

(3) Position the identification plate on the power unit and secure with four drive screws.

(4) Repeat (3) above for installing the remaining identification plates.

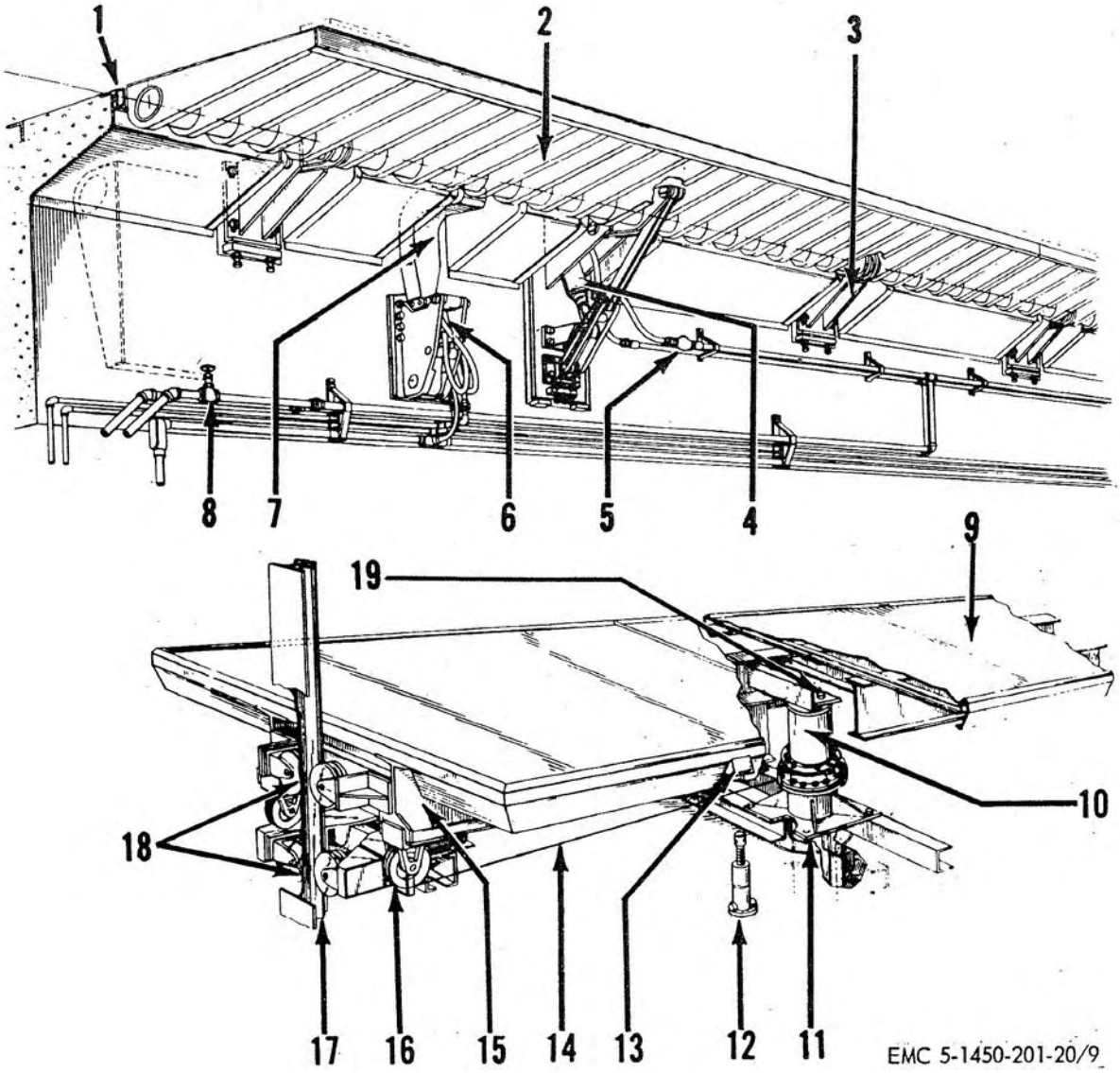

1 Door seal
2 Elevator door
3 Plain door hinge
4 Door cylinder
5 Flow control valve
6 Locking bar cylinder
7 Locking bar
8 Globe valve, 1 1/2 inch, door balancing
9 Elevator platform assembly
10 Hydraulic cylinder plunger
11 Main cylinder
12 Pedestal leveling jack
13 Chassis bolster
14 Equalizer cable
15 Elevator chassis frame
16 Equalizer pulley
17 Guide rail
18 Guide rail caster

Figure 1-3. Component locations of elevator and door assemblies.

Note. Westinghouse motors, only are used on D-type elevators. When requisitioning, in addition to FSN, specify make and model on the motor identification plate.

(5) *Relief valve, pump No. 1.*

(*a*) *Type B and C.*

Manufacturer _____J.E. Lonergan Co.
Model _____HRV-12 Special

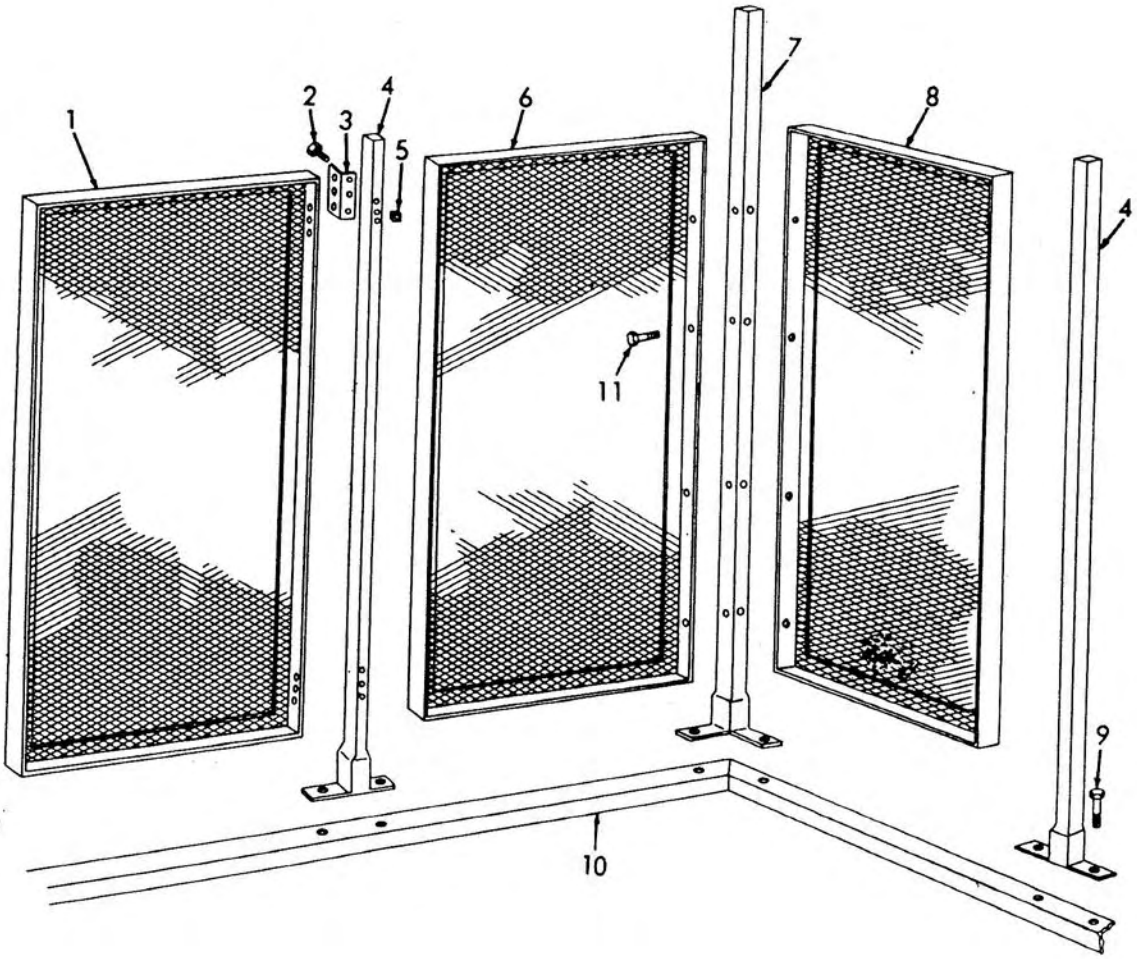

EMC 5-1450-200-20/32

Figure 3-35. Elevator safety guard assembly, exploded view.

1 Door
2 Screw, 1/4-20 × 2-1/2 in. (18 rqr)
3 Hinge (3 rqr)
4 Post (2 rqr)
5 Nut, 1/4-20 (18 rqr
6 Front panel
7 Post
8 Side panel (2 rqr)
9 Screw, cap, 3/8-16 × 1 in. (8 rqr)
10 Pit floor angle
11 Screw, 1/4-20 × 3/4 in. (16 rqr)

Figure 3-35—Continued.

CHAPTER 4

DEMOLITION OF MATERIEL TO PREVENT ENEMY USE

4-1. General

When capture or abandonment of this special hydraulic elevator equipment to any enemy is imminent, the responsible unit commander must make the decision either to destroy the equipment or to render it inoperative. Based on this decision, orders are issued which cover the desired extent of destruction. Whatever method of demolition is employed, it is essential to destroy the same vital parts of this special hydraulic elevator equipment and all corresponding repair parts.

4-2. Demolition To Render Equipment Inoperative

a. Mechanical Means. To render the equipment inoperative by mechanical means, use sledge hammers, crowbars, picks, axes, or any other heavy tools which may be available together with the tools normally included with the equipment to destroy the following:

(1) All relays in the control relay cabinet.

(2) All solenoid valves in the power unit.

Note. The above steps will render the unit inoperative. Completion of the following steps will further destroy the unit.

(3) Master control station.

(4) Elevator control station.

(5) Motor starter.

(6) Pump and motor V-belts and sheaves.

(7) All accessible limit switches.

(8) Motor starters.

(9) Transformers and service entrance panels.

b. Demolition by Misuse. To destroy the elevator by misuse, contaminate the hydraulic fluid with sand, dirt and other abrasives. Then operate the elevator as many times as possible before abandonment.

4-3. Demolition By Explosives or Weapons Fire

a. Explosives. Listed below are the vital parts, in order of priority of demolition, for demolition by explosives (fig. 4-1). Refer to FM 5-25.

(1) A 5-pound charge between each motor and pump in the power unit.

(2) A 5-pound charge at the base of the main cylinder and plunger assembly.

Note. The above steps will render the unit inoperative. Completion of the following steps will further destroy the unit.

(3) A 2-pound charge in each service entrance panel.

(4) A 2-pound charge in each motor starter and control relay cabinet.

(5) A 1-pound charge on the master control station.

(6) A 2-pound charge on each operating cylinder.

b. Weapons' Fire. Direct fire on the elevator with the heaviest practical weapons.

4-4. Other Demolition Methods

a. Demolition by Scattering the Concealment. Remove all easily accessible vital parts such as valves and limit switches and scatter them through dense foliage, bury them in dirt or sand, or throw them in a lake, river, stream, and other body of water.

b. Demolition by Burning. Pack rags, clothing, or canvas in around the power unit, relay and motor starter cabinets, and service entrance panels and transformers. Saturate this packing with gasoline, oil, or diesel fuel, and ignite. Destruction by burning should be used only when no other method is available. Burning at a high temperature for a long period of time is required for effective demolition.

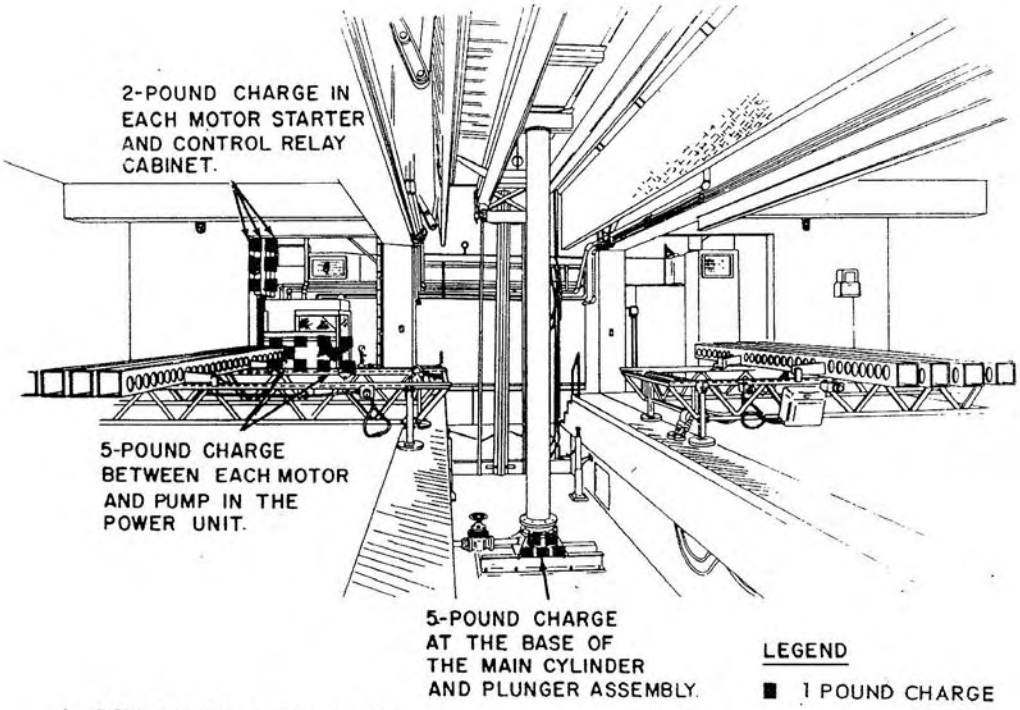

A. POWER SUPPLY END VIEW

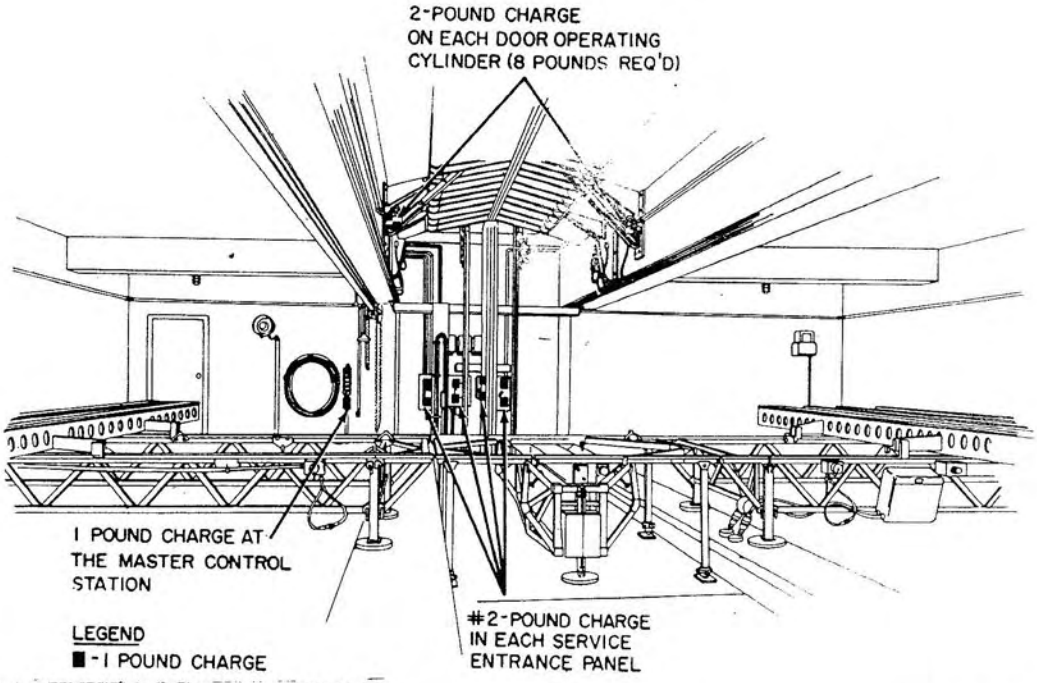

B. ELECTICAL CONTROL END VIEW

MEC 1450-201-15/4-1

Figure 4-1. Placement of charges.

4-5. Training

All operators should receive thorough training in the destruction of this special hydraulic elevator equipment. Refer to FM 5-25. Simulated destruction, using all of the methods listed above, should be included in the operator training program. It must be emphasized in training, that demolition operations for carrying out destruction is limited. For this reason, it is necessary that operators be thoroughly familiar with all methods of destruction of equipment, and be able to carry out demolition instructions without reference to this or any other manual.

CHAPTER 5

LIMITED STORAGE

5-1. Preparation of Equipment for Storage

a. Inspection. Perform a complete inspection of the elevator as prescribed in paragraphs 2-2, 3-7 and 3-8 and DA Form 2321 (Work sheet for preventive maintenance and technical inspection of special purpose hydraulic elevators and doors).

b. Preservation.

(1) *Cleaning and drying.* Prior to the application of any preservative or paint, thoroughly clean all surfaces to be coated with an approved cleaning solvent; wash with soap and water, or steam clean as applicable. Care will be taken to prevent damage to electrical circuits and accessories during the cleaning operation. After cleaning and before applying preservatives or paint, all surfaces and parts will be thoroughly dried.

(2) *Painting.* Surfaces will be cleaned; rust corrosion, and so on will be removed, and surfaces repainted as required. This includes all surfaces which may effectively protected by paint without interference to the operation of the equipment. Refer to TM 9-213 for painting instructions.

(3) *Wire Rope.* Exterior surfaces of wire rope will be cleaned and coated with type P-1 preservative or heavy grease, whichever may be available.

(4) *Preservative.* Coat all exposed precision machined surfaces with type P-6 preservative. Coat all exposed non-precision machined surfaces that are unpainted with P-9 preservative.

(5) *Weatherproofing.* Seal or cover the elevator doors and personnel entrance to minimize entry of water or dirt.

c. Lubrication. Lubricate the elevator (LO 5-1450-201-15-1 and LO 5-1450-201-15-2).

5-2. Inspection and Maintenance of Equipment in Storage

a. Inspection. When equipment has been placed in storage, all scheduled preventive maintenance services including inspection will be suspended and preventive maintenance inspection will be performed as specified herein. Refer to AR 743-505.

b. Worksheet and Preventive Maintenance. DA Form 2321 will be executed on each major item of equipment when equipment is initially placed in limited storage and every 30 days thereafter. Required maintenance will be performed promptly to insure that the equipment is mechanically sound and ready for immediate use.

CHAPTER 6

DIRECT AND GENERAL SUPPORT AND DEPOT MAINTENANCE INSTRUCTIONS

Section I. GENERAL

6-1. Scope

a. The following instructions are for the direct and general support and depot maintenance personnel. They contain information on equipment maintenance that is beyond the scope of the tools, equipment, personnel, or supplies normally available to organizational maintenance.

b. Report all equipment improvement recommendations as prescribed by TM 38-750.

6-2. Record and Report Forms

For record and report forms applicable to direct and general support and depot maintenance, refer to TM 38-750.

Note. Applicable forms, excluding SF 46 which is carried by the operator, will be kept in a maintenance and operating case, mounted near the operator's controls.

Section II. DESCRIPTION AND DATA

6-3. Description

A general description of this special purpose elevator equipment, including location and identification, will be found in paragraph 1-3.

6-4. Tabulated Data

a. General. This paragraph contains all the overhaul data pertinent to direct and general support and depot maintenance personnel.

b. Time Standards. Table 6-1 lists the number of man-hours required under normal conditions for various operations in the maintenance and repair of the elevator equipment. The man-hours listed are not intended to be rigid standards. Under adverse conditions, the operations will take considerable longer; whereas, under ideal conditions with highly skilled mechanics, most of the operations can be accomplished in considerably less time.

Table 6-1. Time Standards

	Man-hours
30 LUBRICATION AND SERVICE-ELEVATOR, SPECIAL PURPOSE.	
3001 Equalizer Assembly:	
Wire rope, equalizer	1.8
(Lubricate and periodically adjust.)	
3006 Pedestal Leveling Jacks:	
Jack screw	.4
(Lubricate and periodically adjust.)	
40 ELECTRIC MOTORS (OTHER THAN ENGINE ACCESSORIES)	
4007 Drive Components:	
Drive belts	0.8
(Adjust and aline V-belt drive.)	
42 ELECTRICAL EQUIPMENT	
4203 Circuit Breakers, Cut-Out Devices:	
Relay assembly, timing	0.2
(Adjust only.)	
Switch assembly, limit	0.2
(Adjust and lubricate.)	
Switch pressure	0.3
(Adjust only.)	
4206 Thermostatic, Automatic and Manual Control Devices:	
Valve assembly, solenoid two-way	1.4
(Disassembly, clean, reassemble and adjust.)	
Valve assembly, solenoid four-way	1.2
(Disassemble, clean and reassemble.)	
43 HYDRAULIC, AIR AND VACUUM SYSTEMS (EXCLUDE BRAKE SYSTEMS)	
4301 Strainers, Filters, Hose, Pipe, Fittings, Tubing:	
Strainer assembly, pipe line	2.0
(Remove screen, clean and replace.)	