BULLETIN SOR 12-2-20M

Rod Price

1963 GENERAL CATALOG

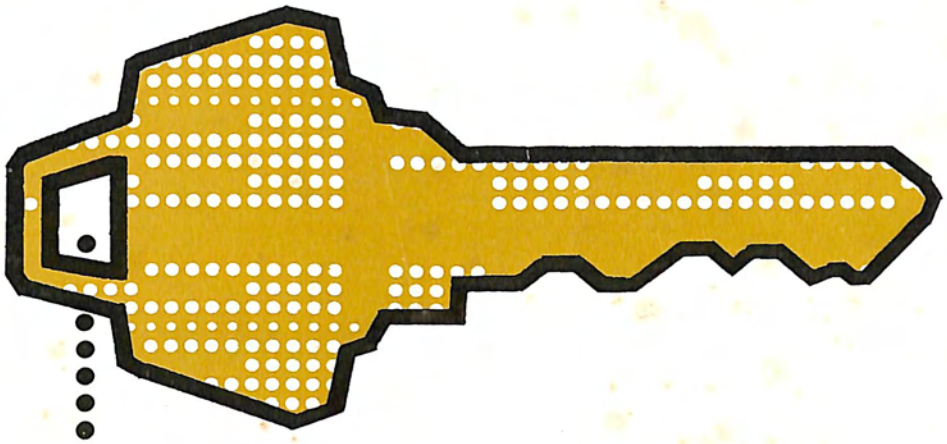

Soroban®

ENGINEERING, INC.

BOX 1717/MELBOURNE/FLORIDA

THE KEY TO...
QUALITY DATA PROCESSING
DEVICES AND SYSTEMS

INTRODUCTION:

During March of 1954, Soroban received its first order — an order for one $430 Custom Coding Keyboard. Ground breaking for a 2500 square foot factory located on the corner of Feast Road and New Haven Avenue (2 miles West of Melbourne, Florida and 30 miles South of Cape Canaveral) was now justified by an order backlog. Soroban's first facility was occupied 30 days later, during April of 1954.

During the years which have followed, additions have been made both to Soroban's plant and product line. Catalog data presented on the following pages summarizes the product growth — a growth that has extended Soroban's complement of standard products from the lone keyboard design, to a multitude of electromechanical peripheral and data-processing equipments. While the product line has been broadened, a series of plant expansions has finally culminated in the relocation of all manufacturing, engineering, and administrative facilities onto a 40-acre tract in the Port Malabar Industrial Park, Palm Bay, Florida (mail address, Melbourne, Florida).

The new 55,000 square foot facility contains one of the South's finest machine shops suitable for production manufacture of electromechanical devices. In addition, Brevard Graphics, Inc., a leader in the production of quality technical manuals and literature, and a wholely owned subsidiary of Soroban, is housed at the Port Malabar facility. It is Brevard Graphics who have produced this, our 1963 General Catalog.

The Soroban staff continues to develop new and improved products, continually aware that the Soroban key opens the door to quality, reliability, and performance second to none.

TABLE OF CONTENTS

SUPER-SPEED PERFORATOR

The GP-2 is a data recorder designed to accurately and reliably record very high speed telegraph messages, instrumentation observations, computer output data, etc., in standard punched tape. The operating speed, extreme reliability of punching, plus long life and ease of maintenance make the GP-2 the most significant advance during recent years in the art of punch-tape recording.

In the GP-2, reciprocating motions for cycling both the tape-feed and punching operations are derived from a pair of constant diameter three-lobe (triangular) cams driven from a constant rotational power source. Enclosing "U" shaped cam-followers whose parallel sides maintain contact with the opposing sides of the cams during cam rotation generate the punch's positive displacement cyclic drive motions. When the camshafts are driven at a constant speed, the cam-followers become stationary at the extremes of their cyclic strokes for one-sixth of each camshaft revolution. During these dwell intervals, the feed and punching

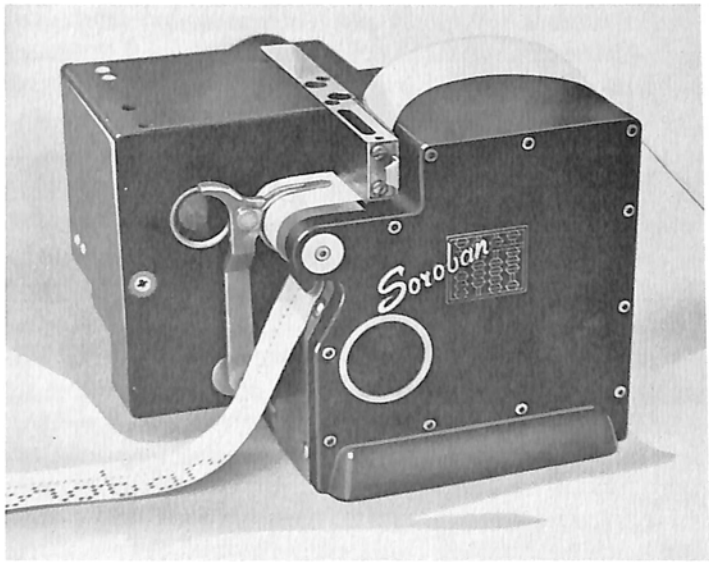

MODEL GP-2 PERFORATOR

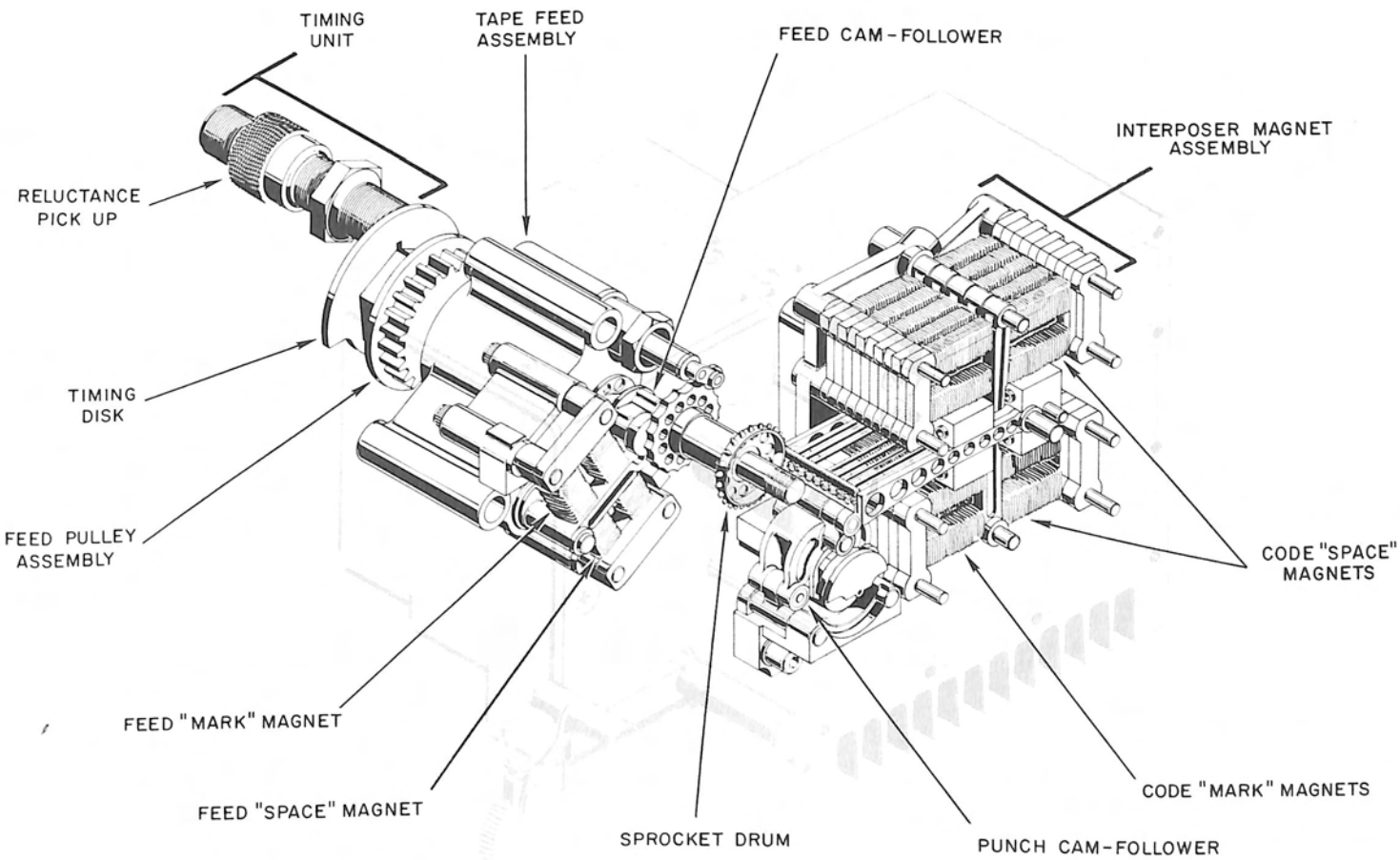

COMPONENT PARTS OF THE GP-2 PERFORATOR

loads are selectively coupled or uncoupled from their respective followers. The relative phasing of the cams, which are operated in an oil splash bath, is established by a toothed drive belt between them.

The three lobe cam systems permit generation of reciprocating motions free of resonance effects so common to spring-loaded cam-followers operated at high speeds. Drive power required to overcome forces exerted by the follower springs encountered in the more common spring-loaded cam-follower systems is not expended in the GP-2's cam systems. Positive following is maintained throughout the complete punch operating cycle. In addition, the dwell intervals produced by the three-lobe cams eliminate the impacts and adjustment instabilities which are encountered when coupling and decoupling comparable feed and punching loads to the more common sinusoidal drive sources.

FEED — In the punch's tape-feed system, two separate dwell intervals in the cyclic pivotal drive motion provide time for positively coupling and decoupling the tape-drive sprocket to the feed-driving member. The resultant mechanism permits tape to be both power accelerated from rest as feed commences and smoothly driven to rest following feed. Since impacts are eliminated, sprocket hole deterioration and mechanical wear are reduced to a minimum. To initiate forward transport of tape, energy is applied to the large upper magnet of the push-pull pair visible in the photograph of the tape-feed mechanism during the period while the feed follower is pivoting in a clockwise direction. During this return interval, the armature reset cam inhibits engagement of the feed pawl with the feed ratchet's sprocket teeth, thereby permitting full magnet pull to be established. During the interval when the feed follower is stationary at its maximum clockwise, or commence-feed position, the pawl is smoothly inserted between internal rectangular teeth of the feed sprocket by precise contouring of the retreating armature reset cam. During pawl insertion, the feed magnet's armature rotates counterclockwise extending the pawl through the feed cam-follower's slitted boss, positively locking the feed cam-follower to the sprocket drum. The cam-follower then pivots counter-clockwise, driving the sprocket drum, so as to feed tape. After the follower and its driven sprocket have pivoted to the extreme counterclockwise position, the follower again becomes stationary and the pawl is removed from driving engagement by the reset cam. If further feed is to be inhibited, magnet drive is transferred to the smaller "space" magnet of the feed mechanism. A spring-loaded detent roller maintains the feed sprocket indexed following tape advance. To prevent resonance effects, the detent roller's torsion spring has been designed to resonate at frequencies no lower than 2,000 cycles per second. It should be noted that although the torsion spring is the only spring in the GP-2, it does not contribute any active driving force to position the sprocket during the dynamic operation of the punch.

The basic feed geometry eliminates sliding motions between engaged driving parts since both the pawl and the driving follower are pivoted on the driven sprocket's axis. The configuration effectively eliminates wear. All working parts of the punch are contained within an oil splash bath enclosure. In addition, all bearing surfaces in the feed drive system are pressure lubricated.

TAPE PUNCHING—By comparison to the motion required for feed, the motion of the punch cam-follower is restricted to one of translation. For each translation

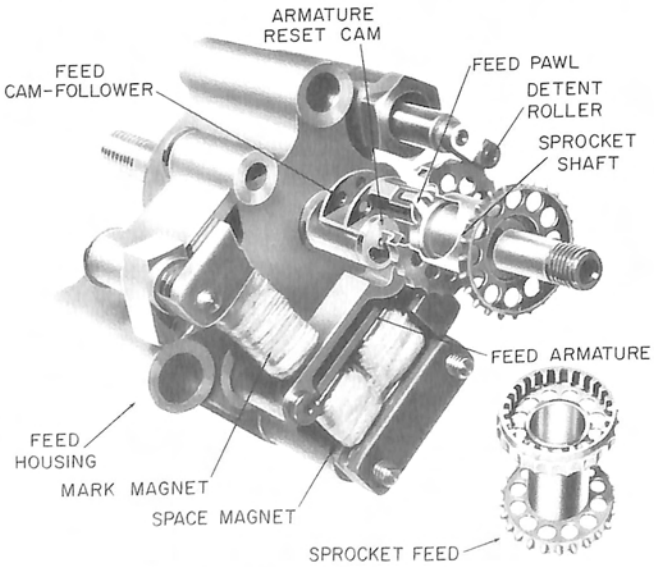

TAPE FEED MECHANISM

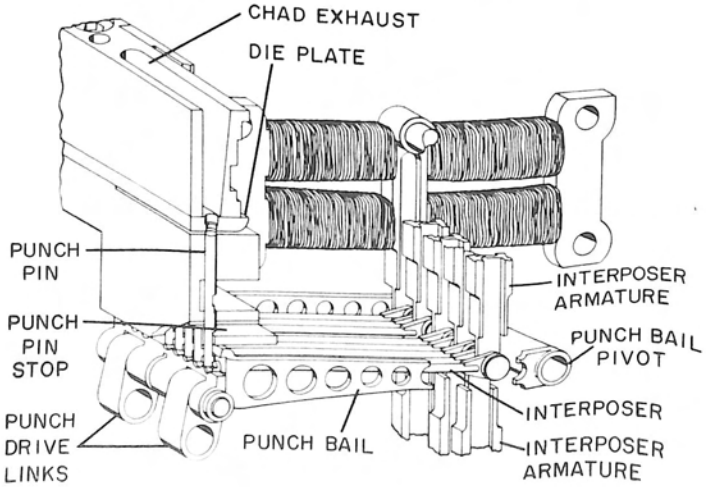

PUNCH AND DIE ASSEMBLY, PUNCH BAIL, AND INTERPOSERS

of the cam-follower from one side to the other, the punch bail-link anchor-link toggle system delivers a single drive cycle to the punch bail. One complete rotation of the punch camshaft sequences the punch bail through two punch cycles. The punch bail is stationary with punch pins retracted for one-third of each punch cycle. For a punch operated at 300 codes per second, the punch shaft must be rotated at 9,000 rpm and the feed shaft at 18,000 rpm. As mentioned earlier, gearing of the shafts is accomplished through use of a Gilmer timing belt (a rubber chain).

During the punch bail's stationary interval, punch interposers in line with a file of punch pins are selectively extended from the bail to engage their associated punch pins (see punch and die assembly drawing). During upward drive, the bail thrust is transferred through the interposers to drive the selected punch pins through the tape. After the tape has been fully perforated, during the return stroke of the punch bail, the punch pins are positively withdrawn by engagement of the bail's edge with the flat notch ground into each pin.

Positive insertion and removal of code interposers is assured by use of push-pull electromagnets, one set for each interposer. One magnet inserts an interposer (mark) and another removes it (space). Transistor driven modified horseshoe, or "U" shaped electromagnets are employed.

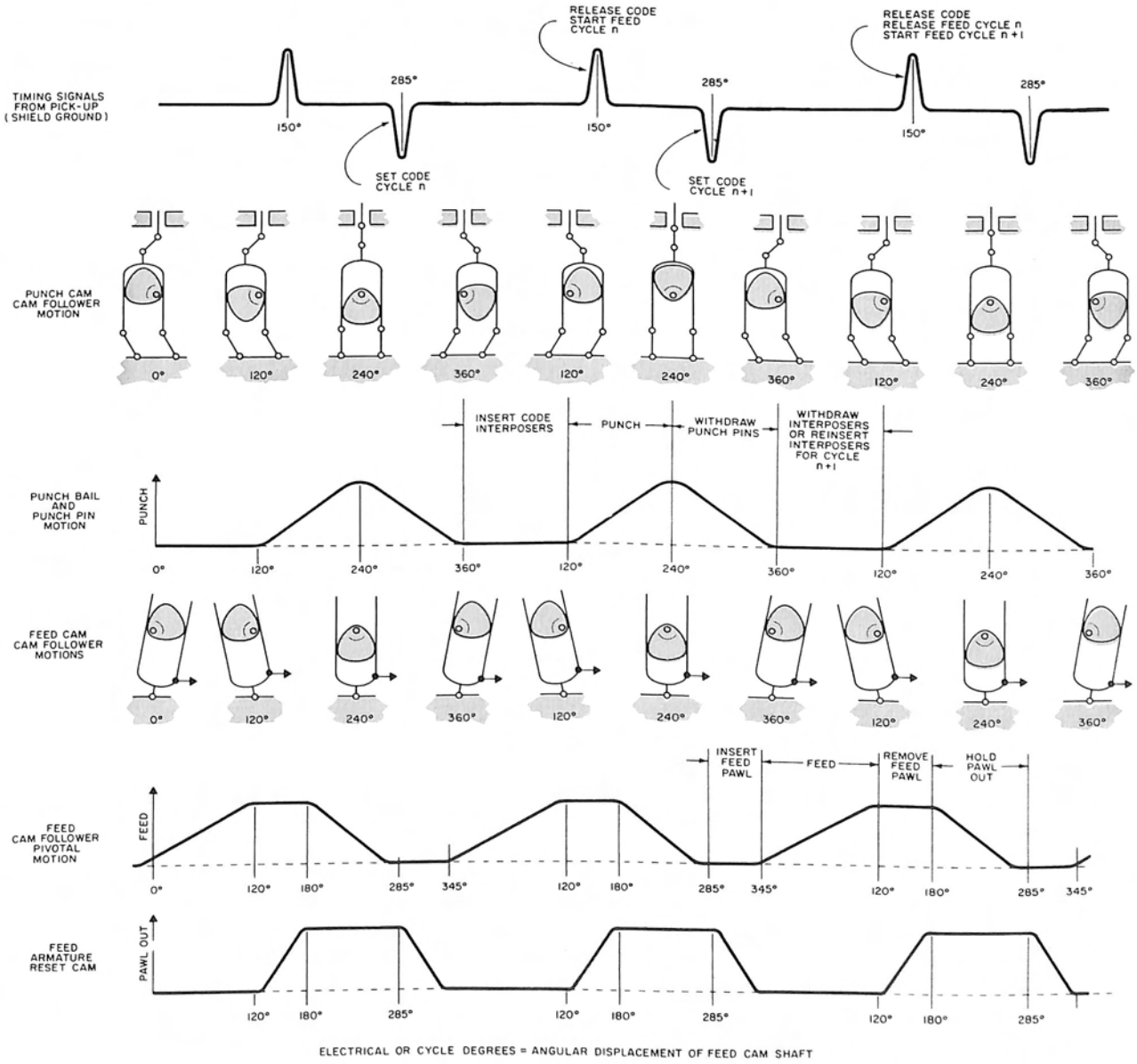

CAM ACTIONS AND MECHANICAL MOTIONS IN RELATION TO PUNCH TIMING

PHASING OF SYNCHRONIZING SIGNALS — The GP-2's electrical drive signals are applied in synchronism with the output signals of a timing reluctance pickup. A notched iron disc mounted on the rear of the feed camshaft bridges or opens the reluctance pickup's air gap. Thus, when the disc rotates to the point where iron bridges the pickup's gap, a magnetic circuit is established and an output pulse of given polarity is produced. Removal of the iron produces a pulse of opposing polarity.

Initial production GP-2's were provided with a synchronizing pickup mounted on the punch motor-mount casting. Field adjustment of the spacing between the pickup and the sync disc was required so as to produce a gap of from 0.030 to 0.045 inches. Model GP-2A punch heads are now available wherein the pickup is internal to the punch head, factory adjusted, such that the only field adjustment previously required finally has been eliminated.

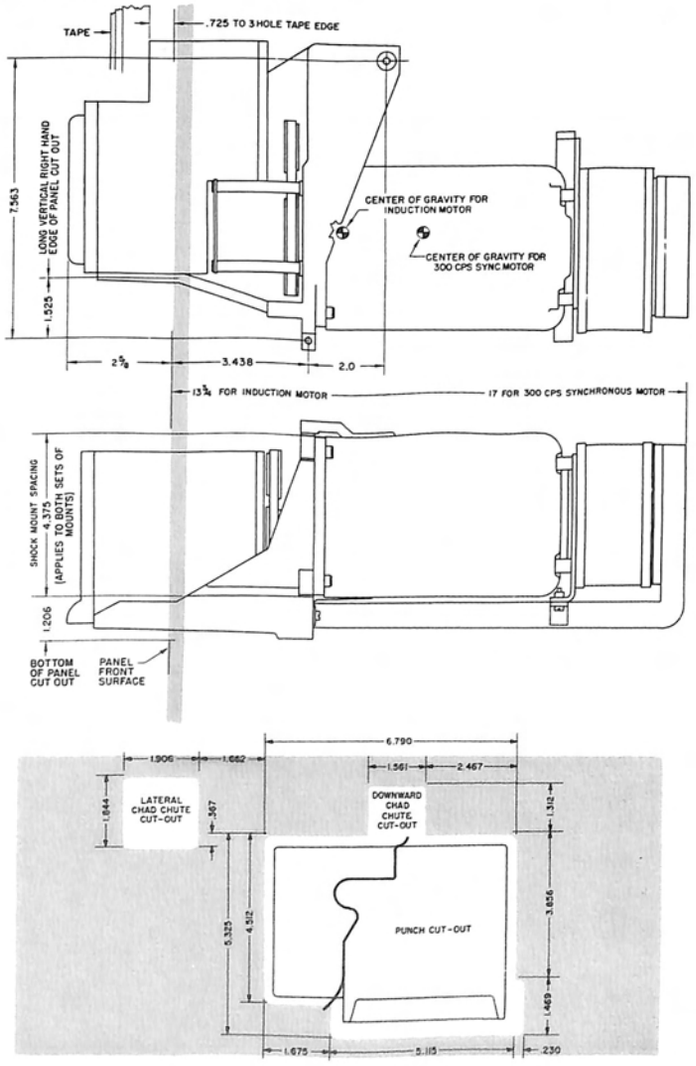

OUTLINE DIMENSIONS OF THE GP-2 AND SHOCK MOUNT INCLUDING PANEL "CUT-OUT" DIMENSION

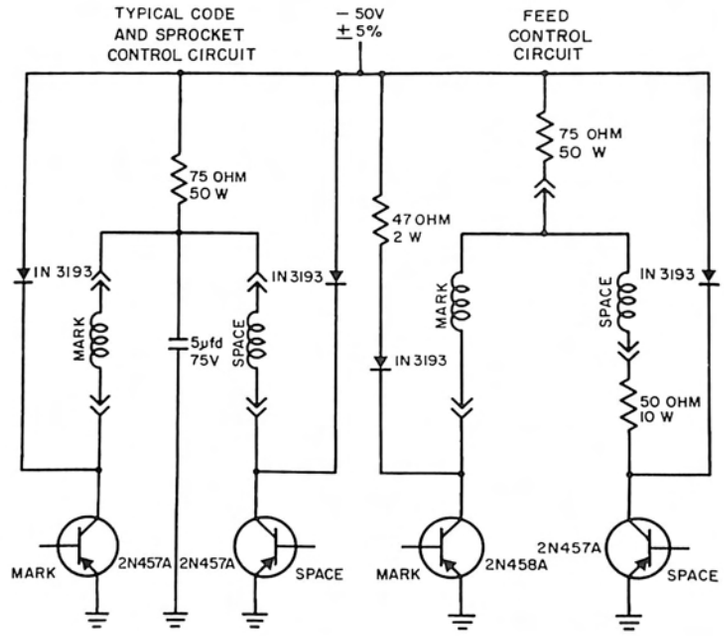

NOTE
DRIVE TO TRANSISTOR BASE MUST BE SUFFICIENT TO SWITCH 1.5 AMP.

CAUTION
DO NOT USE POLARIZED CAPACITOR.

GP-2 MAGNET CONTROL CIRCUITS

PUNCH DRIVE CIRCUITS — To achieve adequate response times, the time constant of the GP-2 control magnets must be reduced through appropriate design of the external drive circuits. Initial overvoltaging of the magnet coils through use of series dropping resistors and peaking capacitors is a definite necessity. The GP-2 should not be operated from drive sources of lower potential than 50 volts. Warranties only apply to punches operated from circuits as illustrated on this page. Please note that the specified circuit inserts the series dropping resistor between the punch magnets and the battery bus. The configuration provides protection against accidential application of full battery voltage to the coils by a test probe or clip lead shorting to ground during debugging. Application of full battery potential to the coils is destructive.

Care should be exercised to remove drive from the control magnets when the drive motor is turned off and cooling is removed. As a suggestion, it is recommended that space-magnet current be applied to all magnets when the drive motor is turned on. After the drive motor is turned off, while the motor is coasting to a stop, drive should be held on the space magnets for the required 5 seconds or so, and removed thereafter.

CHECKING — As an optional feature provided at extra cost, the GP-2 is available with code-checking features wherein penetration of the punch pins into the die plate is sensed. This feature is not available on the LP-2 tape perforators.

Checking is accomplished by notching each of the punch pins. A compact reluctance pickup is then mounted adjacent to each notch. The pickup is positioned such that when the punch pin has traveled a distance sufficient to penetrate the die plate, the unnotched portion of the punch pin has closed the magnetic circuit so as to produce a pulse of given polarity. A pulse of opposite polarity is produced when the punch pin is withdrawn. The most useful of the checking pulses occurs at approximately 200 degrees of the punch cycle; a timing which permits inhibiting of feed should an error be detected.

Tests with the GP-2 demonstrate that in the event of a tape jam, paper tape will break before the sprocket holes are torn out. A tape jam while punching plastic tape will produce a sprocket-feed error. To check for such errors, a feed reluctance pickup senses each advance of the punch's drive sprocket. Thus, to be valid for all types of tapes, checking of tape transport in the GP-2 requires interlocking the detection of a satisfactory drive - sprocket feed - operation, coupled with sensing of no-tape and tight-tape.

It should be noted that checking of a GP-2 perforator is a luxury of questionable value in most practical applications. This appraisal is based on the fact that few if any other punch-tape-processing equipments which might subsequently handle a GP-2 produced tape will exhibit an error frequency within an order of magnitude of that of the GP-2 itself. In an unchecked GP-2 one may expect to record hundreds of rolls of tape without generation of a single recording error.

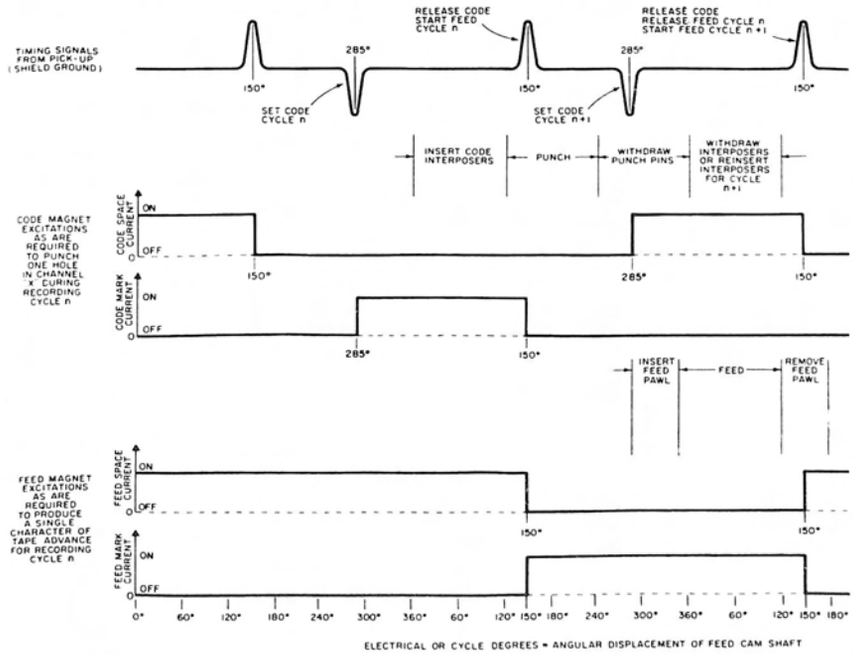

PUNCH SYNCHRONIZATION AND CONTROL SIGNALS

GP-2 MECHANICAL SPECIFICATIONS

Operating Speed	300 codes per second (nominal). A recording and tape feed cycle is executed in just over 3 milliseconds. Following each such recording cycle, the punch may be directed either to record in the immediately succeeding cycle, or pass over any number of such 3 millisecond cycles.
Code Characteristics	Models available for perforating either 5, 6, 7, or 8-hole tapes, inverted 5 level patterns, or advanced feed-hole patterns.
Feed Spacing & Hole Tolerances	In all instances, the round holes are held to spacing and size tolerances improved over the values specified by the Electronic Industries Association Standard RS 227 for one-inch perforated tape (8 level) and the subsequent 11/16-inch (5 level) tape standard. The maximum accumulated error in feed is ±0.005 inches in 6 inches of punched tape, corresponding to 60 recorded characters.
Punch Size, Unmounted	6½ inches wide, 5 inches high, 6½ inches deep, extends 2¾ inches forward of mounting panel.
Weight	9 lbs. unmounted punch. 28 lbs. max. punch with induction motor mount.
Punch Cooling Requirement	Free flow of air is required to supply the 100 cfm blower affixed to punch mount. Punch mounts are available either to intake or exhaust air from the lower front lip of the punch.
Operating Thermal Rise	40°C with continuous operation at 300 codes per second.
Lubrication	Oil splash bath lubrication for punch pins, cams, and bails. Pressure lubrication of the complete feed mechanism. Oil change is recommended after 500 hours of operation. Crankcase capacity, 6½ fl. oz.
Environmental Operation	Design of the punch is such that severe environmental requirements can be met. Particular emphasis has been placed on adherence to MIL-E-16400 and MIL-I-26600.
Punch Head Servicing Schedule	2500 one-thousand foot rolls of dry paper tape minimum or 6000 rolls of oiled paper tape, or 1000 hours of operation, whichever occurs first.
Chad Disposal	While punching 8 level delete codes at 300 codes per second, one cubic inch of chad is produced every six seconds. Normally chad is routed through a gravity chute feeding to the left of the punch head.
Tape Restrictions	The GP-2 will perforate any paper or relatively flexible plastic tape of thickness between 0.0025 and 0.005 inches.
Starting Torque	For a new punch, 60-ounce inches must be available from the drive motor.
Drive Motor	1/3 HP induction motor. 3350 rpm, 115 volt, 3½ ampere, 60 cycle. Starting current, 10 ampere, max. Motor and punch are generally provided on a center-of-gravity shock mount.

GP-2 ELECTRICAL SPECIFICATIONS

Code Interposer Magnets (Mark & Space)	3 watts maximum continuous dissipation, 10 to 14 mh, 6 ohms, 480 ma min. Design center with normal 60% duty cycle circuitry, 620 ma.
Feed Magnet-Mark	6 watts maximum continuous dissipation, 75 to 90 mh, 16 ohm, 440 ma min. Design center, 550 ma.
Feed Magnet-Space	1.6 watts maximum continuous dissipation, 6 to 10 mh, 5 ohms, 330 ma min. Design center, 380 ma.
Magnet Insulation	300 volt DC test. Transients must be suppressed to a voltage of less than 100 volts peak.
Synchronization Signals	6 volts peak-to-peak, ¼ millisecond duration from 1000 ohm source from factory adjusted GP-2A and 10 volts peak-to-peak from GP-2 when pickup is spaced .030 inches to .045 inches from sync disc. Signal-to-noise ratio 10:1 or better.

See Punch Ordering Questionnaire, Page 68

LP-2 LOW-SPEED PERFORATOR

Soroban's 150 character per second Model LP-2 Low-Speed Tape Perforator operates at a speed which matches or exceeds that of any other commercially available tape punch. However its operating speed is indeed low when compared to its companion, the 300 code per second Soroban Model GP-2.

A comparison of the artist's conception of both the GP-2 and LP-2 demonstrates the similarity of their designs. Both are housed in die cast anodized aluminum cases. Many components of the two equipments are identical and interchangeable. Both display identical lubrication systems as well as similar three-lobe cam systems to produce identical positive displacement cyclic tape-feed and punch driving forces.

In the LP-2, a single-end electromagnet configuration replaces the push-pull magnets of the GP-2 for positioning both the code interposers and feed pawl. Coil springs provide the necessary armature return forces to both the interposers and the feed pawl. In addition to other limiting components, the spring returns inhibit operation of the LP-2 at speeds in excess of approximately 150 codes per second. When operating at 150 codes per second, the power dissipated in the punch head falls to a level below that requiring forced air cooling. Thus, a simple plate may be used for the LP-2's punch-motor mount, without resort to expensive air ducts and blowers as are encountered with the GP-2. As with the GP-2A, synchronization of the LP-2 is from a factory adjusted internal pickup. Integration of the pickup into the punch head provides a mechanism free of field adjustments.

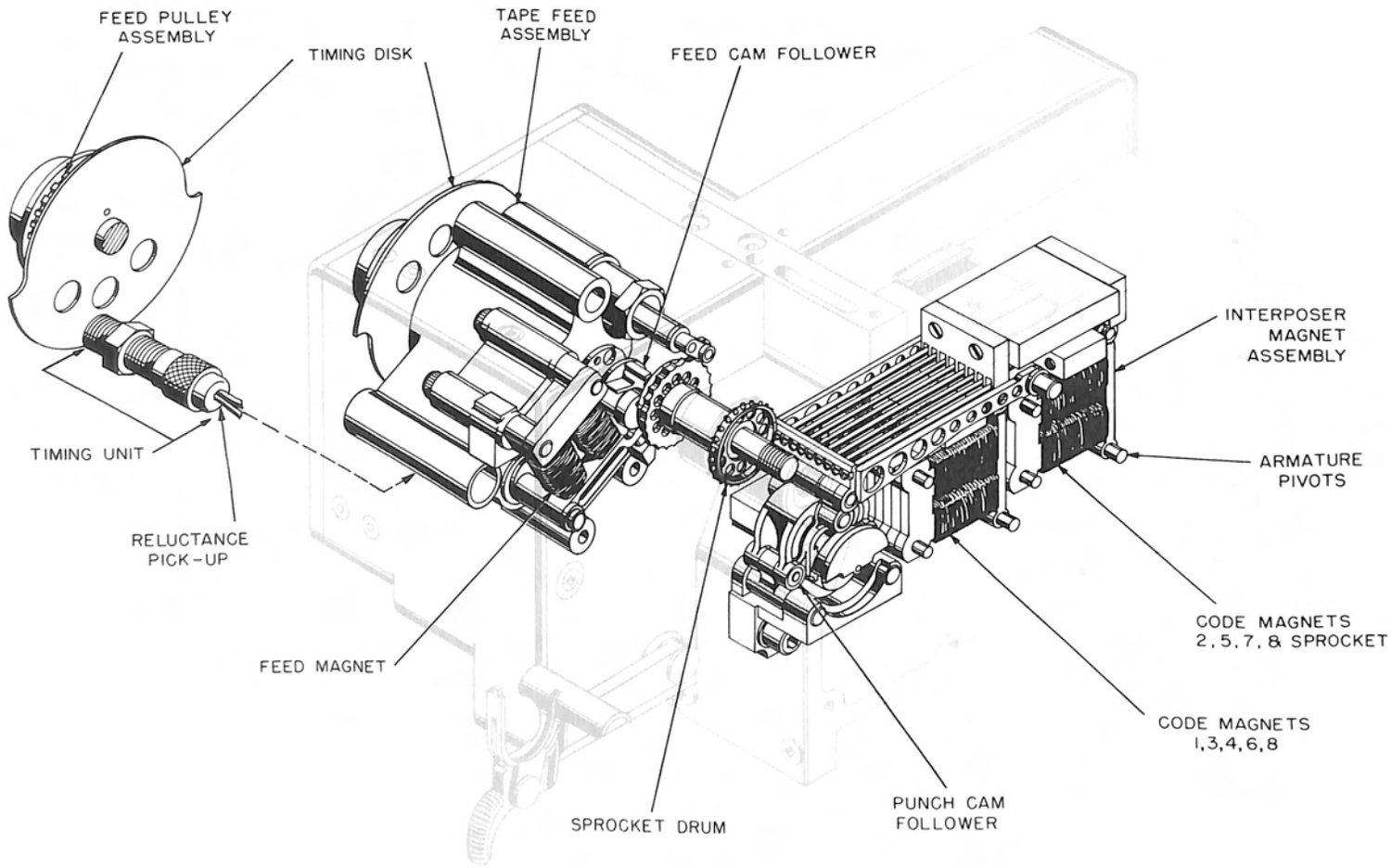

COMPONENT PARTS OF LP-2 PERFORATOR

LP-2 LOW-SPEED PERFORATOR

The effectiveness of the LP-2's counterbalances has produced a mechanism so free of vibration that chad worms, as are produced while punching heavily oiled tape, will not normally break up. Thus chad removal from the LP-2 must be either through a vacuum chad disposal system or through a simple straight back gravity chad chute. The very short path of the straight back chad chute permits dumping of chad before the worms produce chute blockage. On the other hand, air turbulence of the vacuum chad disposal system breaks up the worms so effectively that the chad may be pumped to any convenient remote collection box through simple ¼-inch tubing. In equipments where vacuum chad disposal is provided, the air source for the system is obtained from a carbon vane air pump mounted integral to the punch's drive motor.

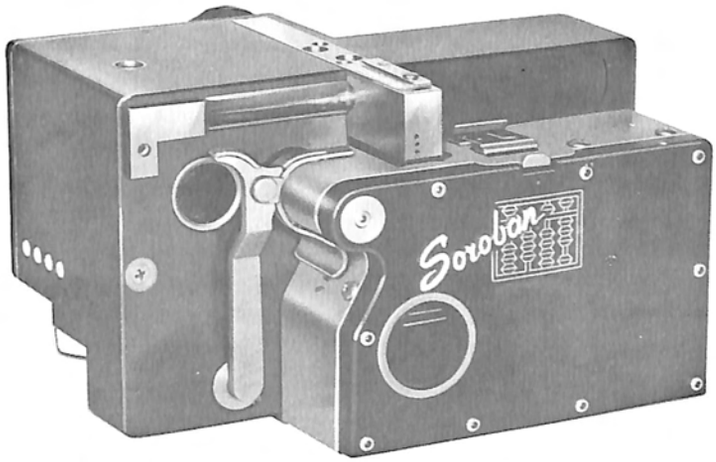

MODEL LP-2 PERFORATOR

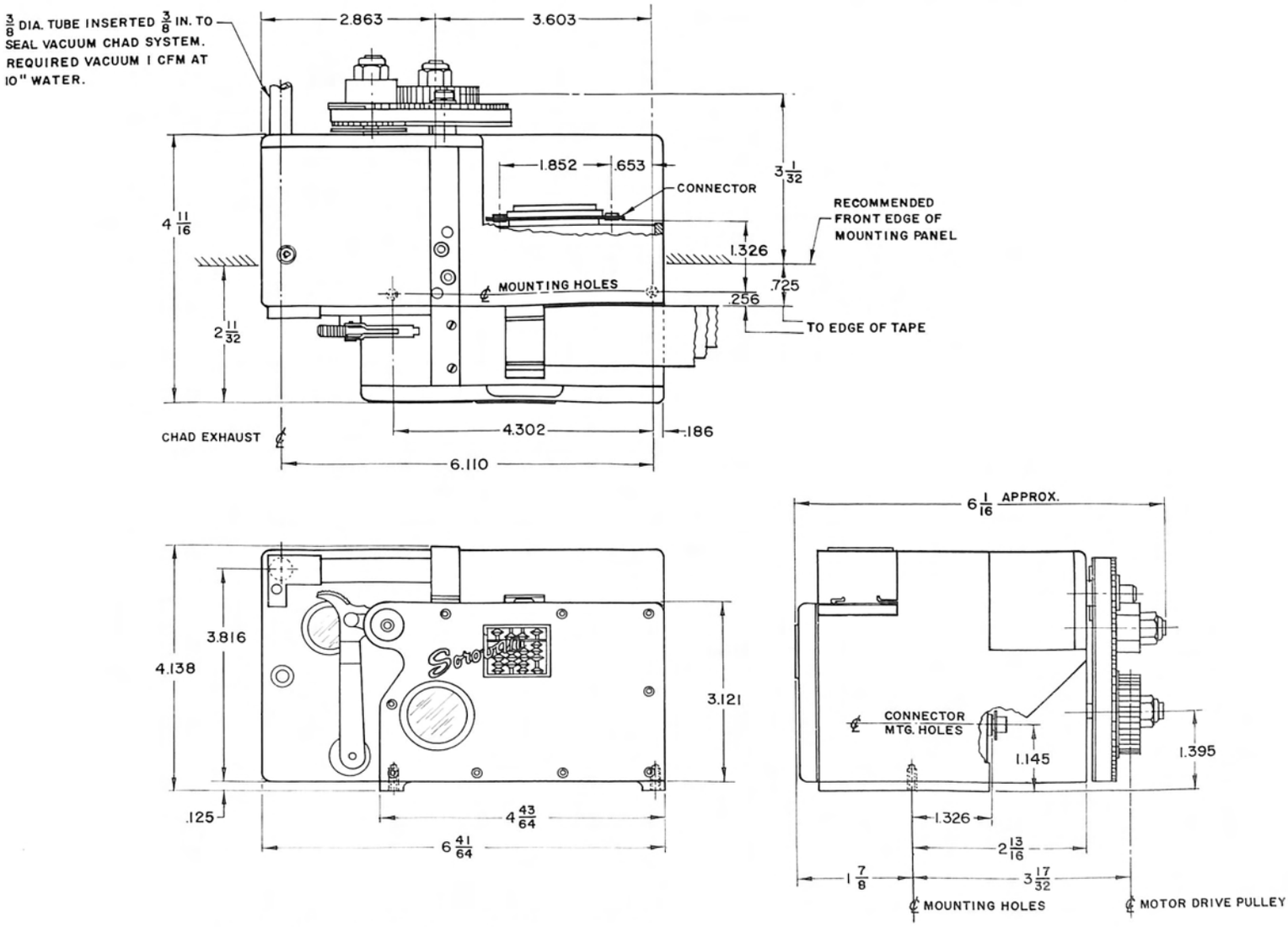

OUTLINE DIMENSIONS, LP-2 PERFORATOR

Either a new LP-2 or a GP-2 will require 60-ounce inches of starting torque from its drive motor. After a few hundred hours of operation, this figure will fall, possibly to a value as low as 30 to 40-ounce inches. Because of the poor starting torque characteristics of most induction motors, a ⅓ HP rated induction motor is recommended for drive of either punch. By comparison, only a 1/10 HP repulsion-start induction run-motor would be required to drive an LP-2 at 150 codes per second. Since repulsion-induction motors do not exhibit a trouble-free life comparable to that obtainable from the punch, use of the larger induction motor is strongly recommended.

The LP-2 was designed to permit addition of a printing station to the punch head for production of interpretive tape (see PT-1). The design required relocation of the code magnets from their GP-2 positions to the lower half of the code-magnet stack. The resulting geometry has enhanced the ease of tape loading, since tape is now carried directly across the top of the punch.

PUNCH DRIVE CIRCUITS — Although not as critical as with the GP-2, the time constant of the LP-2 control magnets must be reduced through appropriate design of external drive circuits. Initial overvoltaging through use of series dropping resistors is a necessity.

The LP-2 punches are warranted if operated from the circuits illustrated on this page. Circuits proposed for operation at voltages lower than 28 volts should be submitted to Soroban for engineering approval. Please note that the specified circuit inserts the series dropping resistor between the punch magnets and the battery bus. The configuration provides protection against accidental application of full battery voltage to the coils by a test probe or clip lead shorting to ground during debugging. Application of full battery potential to the coils is destructive.

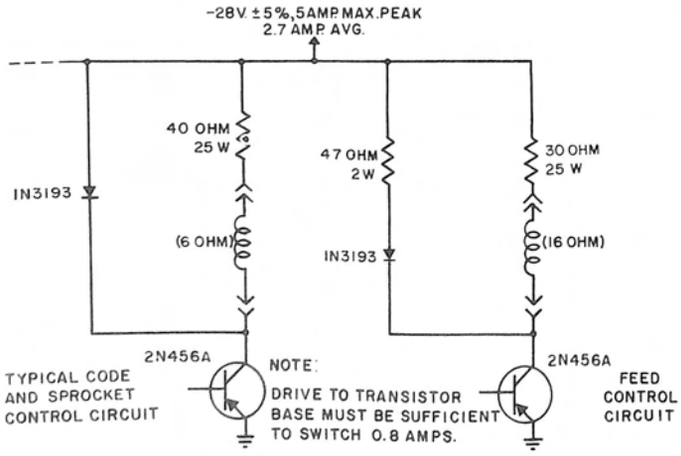

LP-2 MAGNET CONTROL CIRCUITS

LP-2 MECHANICAL SPECIFICATIONS

Operating Speed	150 codes per second (nominal). A recording and tape-feed cycle is executed in approximately 7 milliseconds. Following each such recording cycle, the punch may be directed either to record in the immediately succeeding cycle, or pass over any number of such 7 millisecond cycles.
Code Characteristics	Models available for perforating either 5, 6, 7 or 8-hole tapes, inverted 5-level patterns, or advanced feed-hole patterns.
Feed Spacing & Hole Tolerances	In all instances, the round holes are held to spacing and size tolerances improved over the values specified by the Electronics Industries Association Standard RS 227 for one-inch perforated tape (8 level) and the subsequent 11/16 inch (5 level) tape standard. The maximum accumulated error in feed is ±0.005 inches in 6 inches of punched tape, corresponding to 60 recorded characters.
Punch Size, Unmounted	6¾ inches wide, 4¼ inches high, 6 inches deep, extends 2½ inches forward of mounting panel.
Weight	9 lbs. unmounted punch. 24 lbs. max. punch with induction motor mount.
Punch Cooling Requirement	The punch and motor dissipate approximately 150 watts.
Operating Thermal Rise	40°C with continuous operation at 150 codes per second.
Lubrication	Oil splash bath lubrication for punch pins, cams, and bails. Pressure lubrication of the complete feed mechanism. Oil change is recommended after 500 hours of operation. Crankcase capacity, 6½ fl. oz.
Environmental Operation	Design of the punch is such that severe environmental requirements can be met. Particular emphasis has been placed on adherence to MIL-E-16400 and MIL-I-26600.
Punch Head Servicing Schedule	2500 one-thousand foot rolls of dry paper tape minimum or 6000 rolls of oiled paper tape, or 5000 hours of operation, whichever occurs first.
Chad Disposal	Disposal of chad is available either through vacuum system or through short, straight-back chad-chute.
Tape Restrictions	The LP-2 will perforate any paper or relatively flexible plastic tape of thickness between 0.0025 and 0.005 inches.
Recommended Drive Motor	1/3 HP induction motor. 3350 rpm, 115 volt, 60 cycle. Starting current, 10 ampere, max., running current 2 amperes.
Punch Starting Torque	60-ounce inches, max.
Motor Sprocket & Drive Belt	For 150 code per second operation from 3350 rpm motor, use 27-tooth pulley. Punch motor-pulley center-distance for 46 tooth, .234 pitch Gilmer belt should be held to 2.564 ±.005 inches.
Punch Drive Sprocket	21 tooth .234 pitch.

LP-2 ELECTRICAL SPECIFICATIONS

Code Interposer Magnets	3 watts maximum continuous dissipation, 10 to 14 mh, 6 ohms, 480 ma min. Design center with normal 60% duty cycle circuitry, 620 ma.
Feed Magnet	6 watts maximum continuous dissipation, 75 to 90 mh, 16 ohms, 440 ma min. Design center, 550 ma.
Magnet Insulation	300 volt DC test. Transients must be suppressed to a voltage of less than 100 volts peak.
Synchronization Signals	4 volts peak-to-peak, ¼ millisecond duration from 1000 ohm source from factory adjusted internal pickup. Signal-to-noise ratio, 10:1 or better.

See Punch Ordering Questionnaire, Page 68

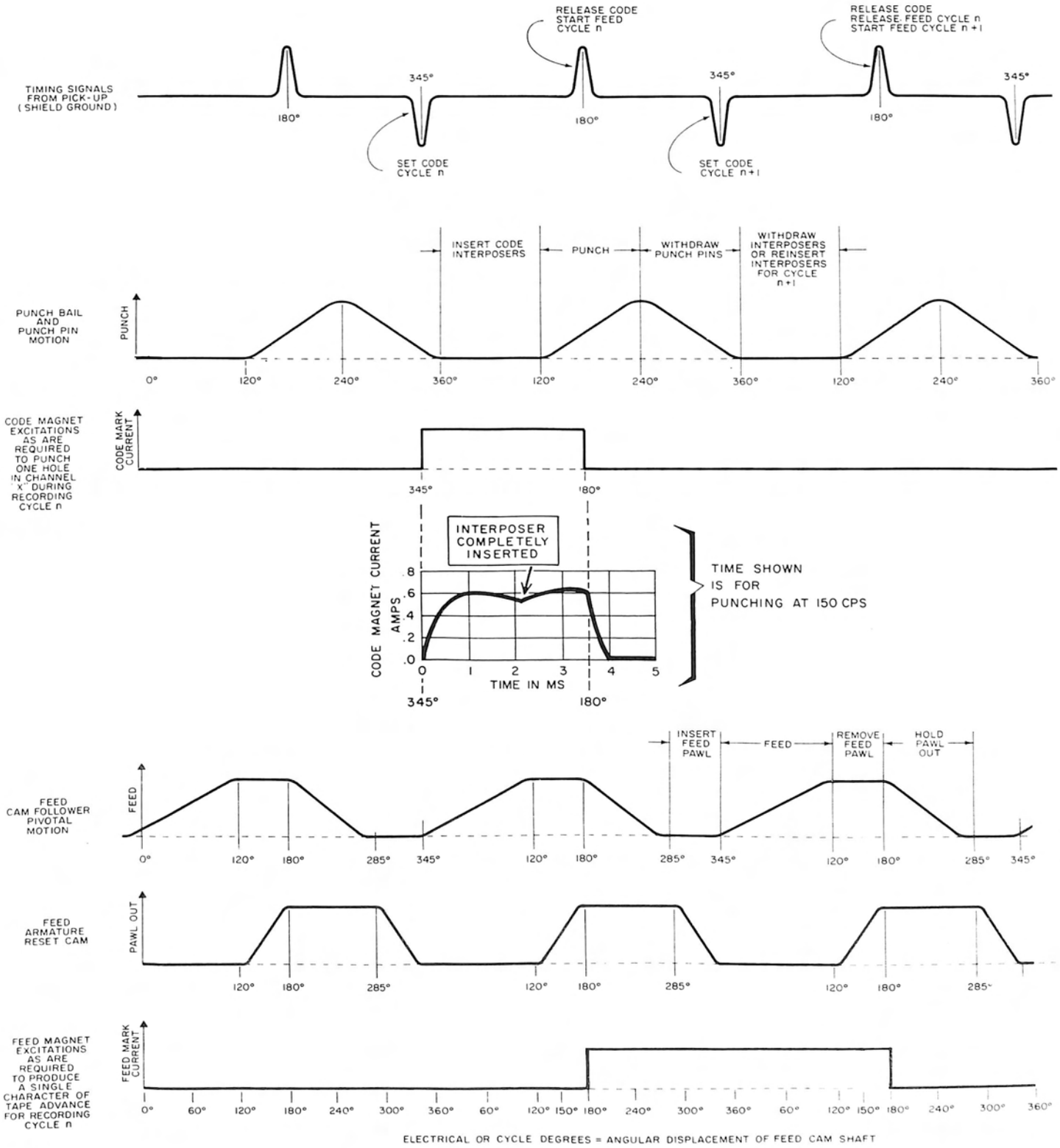

TIMING DIAGRAM

PT-1 PERFORATOR-PRINTER

The Model PT-1 Printers were designed to permit high-speed recording of digital data in standard punched paper tape while simultaneously printing the characters represented by the punched data along the edge of the tape. Thus the PT-1 permits recording of telegraph messages at the rate of 1,000 words per minute, or logging of instrumentation data at 100 codes per second.

The Model PT-1 Perforator-Printer consists of a Model LP-2 Punch upon which is mounted a separate detachable print head. Synchronization requires that the two units be geared together and operated as an integrated equipment. The mechanical construction of the print head is very similar to that of the CT-1 Serial Columnar Tabulator; most components of the two equipments being interchangeable. In both, the basic type font consists of an octagonal drum, approximately 3/8-inch in diameter. In the PT-1, the inch-long drum accommodates up to eight characters or symbols on each of its eight faces to permit printing of up to 64 symbols. Simple exchange of type drums permits rapid conversions between codes and/or type styles.

Printed either in the sprocket channel, or in the 7th or 8th channel positions of standard 7 or 8 hole tapes, printing is displaced the standard 6½ punched characters behind the punched counterpart of the printed character. For legibility, Soroban recommends printing in either the 7th or 8th channel in preference to printing between the sprocket holes, as is specified in a recent EIA proposed standard. The PT-1 accommodates 5, 6, 7, or 8 level tapes.

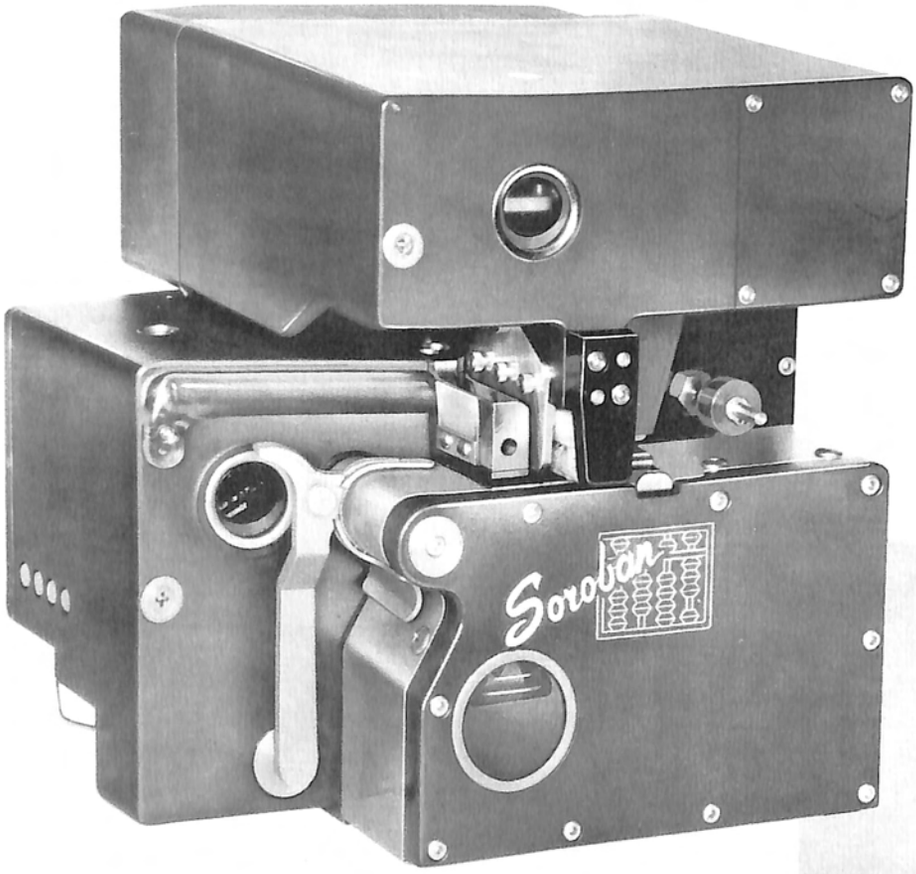

MODEL PT-1 PERFORATOR-PRINTER

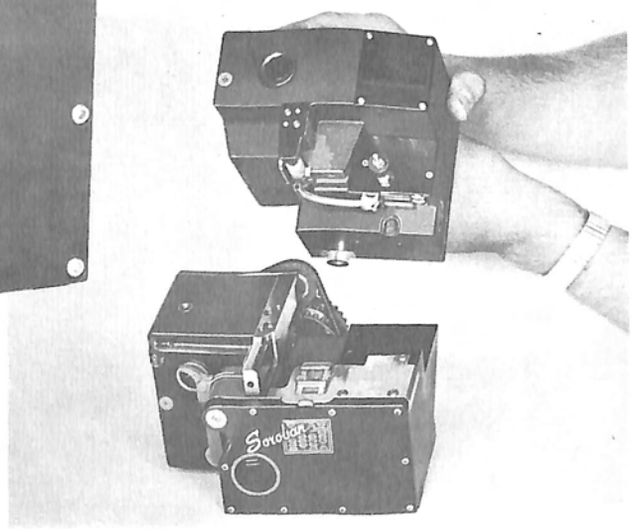

DETACHABLE PRINT HEAD FITS LP-2 PERFORATOR

PT-1 PERFORATOR-PRINTER

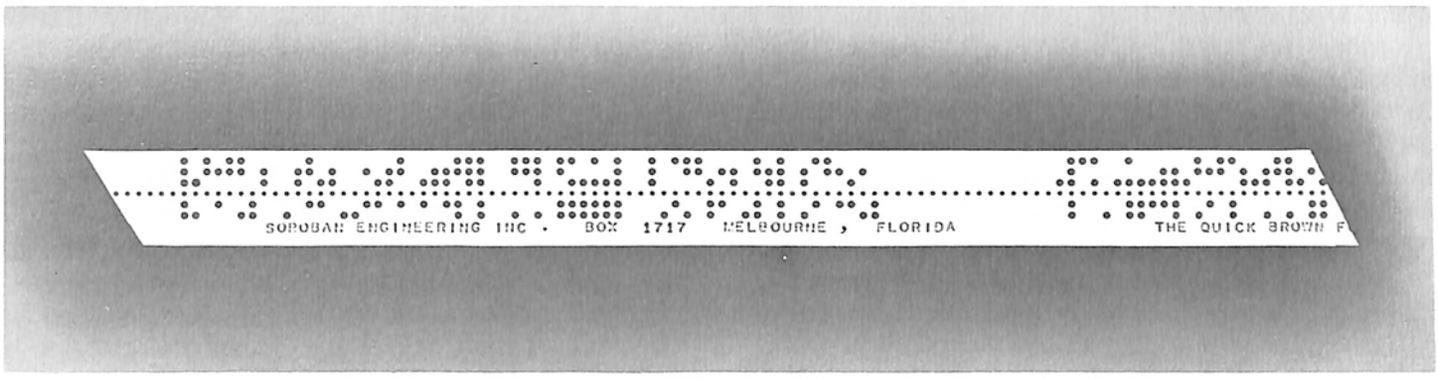

TAPE SAMPLE PRODUCED BY PT-1 PERFORATOR-PRINTER

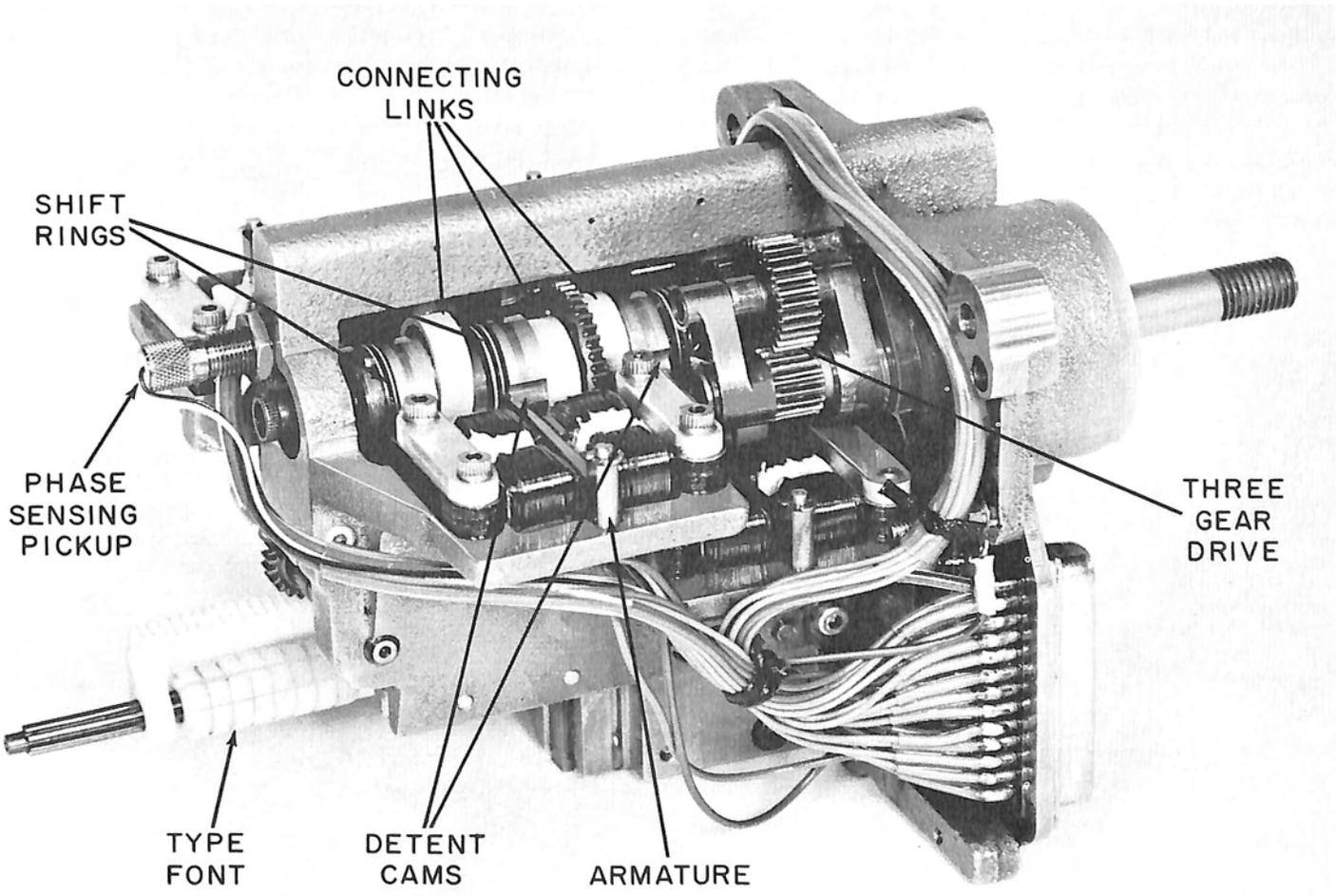

PT-1 PRINT HEAD MECHANISM

HOW A CHARACTER IS SELECTED — The type cylinder contains an 8 x 8 matrix of 64 print symbols. Two identical 3-bit rack and pinion differential adders are used to mechanically position the type drum to any selected one of the eight translational and rotational matrix positions. The three-bit adders selectively index the drum to succeeding print positions without first returning it to a zero reference position. Connecting links from three selectively positioned eccentrics provide the drive motions which, when summed by the two differential adders, position the type drum. The design requires the three eccentrics to deliver 1, 2, and 4 units of displacement to their respective connecting links. The eccentrics are positively detented in either of their extreme "up" or "down" positions. They may be repositioned only by actuation of dog clutches which rigidly couple the eccentrics to their drive shafts. To produce a rigid coupling free of backlash, minimum clearances must exist between the coupled dog clutch's parts. Relative motions may not exist between the part to be driven and the drive source when the clutch is actually engaged. Since the eccentrics are stationary when clutch engagement or disengagement is required, the main shaft must also be driven to rest during the actual clutching operation. Thus, in the PT-1 the shafts which position the eccentrics, hereafter referred to as main shafts, are driven through a three-gear drive which provides a cyclic rotational motion containing a single dwell period equal to 60 degrees of each basic print cycle. The clutch is actuated during this dwell interval.

The actual operation of the dog clutches may be followed in the accompanying artist's conception. An inspection of the drawing reveals that each clutch magnet pair positions a freely moving coupling pin guided within the eccentric. The pin may be forced either to the left or right by the magnet pair. Positioning the coupling pin into the drive hole of an appropriate drive disc creates the only condition where the main shaft can reposition an eccentric. During the main shaft's 60° dwell interval the coupling pin is positioned either into coupling engagement, or into bearing engagement against a smooth drive disc upon which it will slip. Positioning of the various eccentrics provides the 2^0, 2^1, or 2^2 incremental motions, which when added, establish the linear displacement of the 3-bit adders' output racks. The two output racks' translations are converted, one to rotate the print drum through its splined shaft, and the other to

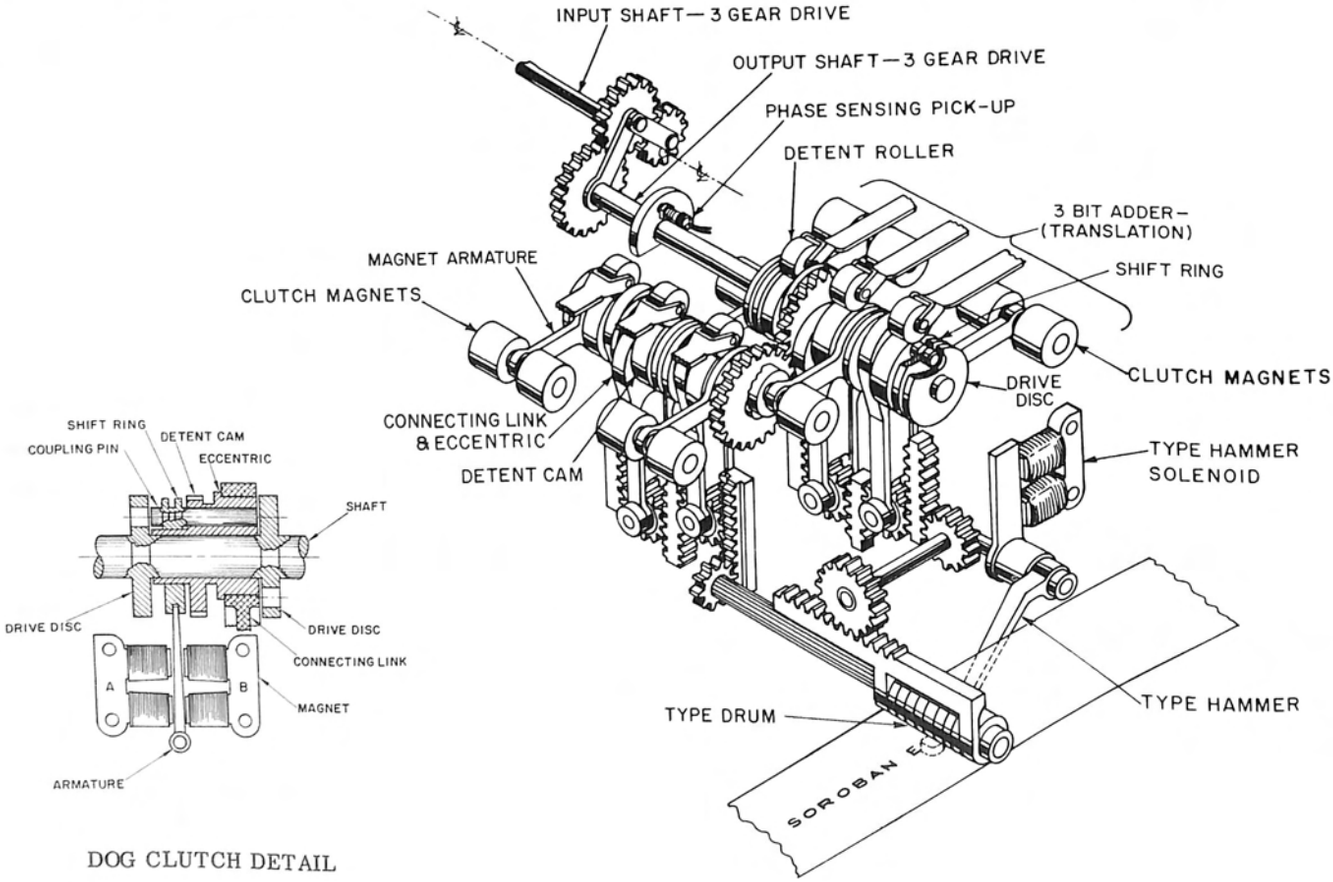

DOG CLUTCH DETAIL

CHARACTER SELECTION MECHANISM

translate the drum. Thus, selective operation of the six magnetically controlled dog clutches will position the type drum to any predetermined one of its 64 possible positions.

A review of the dog-clutch detail reveals that appropriate application of electrical drive will correctly position the print drum regardless of whether an eccentric is in the "up" or "down" position when the clutch is actuated. For example, if the detented eccentric in the artist's sketch were properly positioned for the next print cycle, the control magnets would be driven to push the coupling pin to the right, a condition wherein it slips against the smooth hard surface of the rotating disc. If on the next character selection, the eccentric were still in its proper position, drive to the control circuits would be transferred to move the pin to the left, again leaving the detented eccentric properly positioned. However if the eccentric were to be repositioned, magnetic drive would have been retained on the right magnet to force the coupling pin into coupling engagement.

A reluctance pickup and timing disc attached to the main shaft generates pulses of opposing polarity to indicate when the coupling holes in the drive discs are proceeding from the bottom to the top, or vice versa. These signals dictate which magnet of each magnet pair is to be driven when the respective coupling holes go from top-to-bottom, and vice versa.

Since the print drum is stationary for nearly one-third of each print cycle, print-hammer timing tolerances may be very coarse. A simple solenoid actuated print hammer is employed in the PT-1.

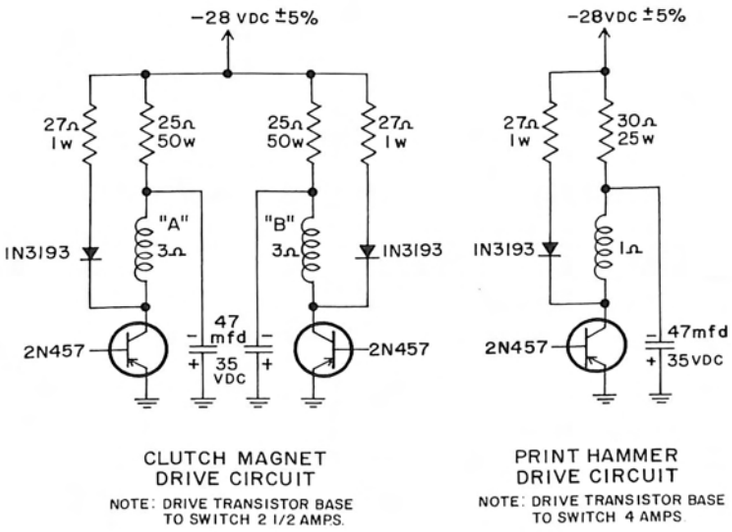

PT-1 MAGNET CONTROL CIRCUITS

PT-1 SPECIFICATIONS

Basic Components	LP-2 Perforator and CT-1 Printing mechanism.
Maximum Operating Speed	Punch 100 characters per second and simultaneously print 6½ characters behind the punched counterpart. Models available to print either between sprocket holes, or in the 7th or 8th channels of 7 or 8 level tape.
Tape	0.0025 to 0.005 inches thick 5, 6, 7, or 8 level tape which will accept an ink imprint.
Print Color	Color produced by ¼ inch inked ribbon. Purple or black recommended.
Type Characteristics	⅜ inch diameter x 1 inch long octagonal print drum, each face of which accommodates eight characters .080 inches high. Prints up to 64 discrete symbols.
Input Codes	6 bits to the Printer to specify one of 64 print symbols. Up to 8 bits to the punch.
DC Power Requirements	With specified drive circuits, 10 amperes total at 28 volts divided between 6 amperes average for printer head and 4 amperes average for punch.
Weight	15 lbs., unmounted printer punch. 30 lbs., punch with induction motor.
Finish	Anodized Aluminum.
Size	6¾ inches wide, 7¼ inches high, 6¼ inches deep, extends 2¾ inches forward of mounting panel.
Punch Characteristics	See data for LP-2.
Printer Clutch Magnets	Rated 4 watts max. continuous dissipation, 3 ohms. Drive circuits should use one ampere design center.
Print Hammer Magnet	Rated 6 watts max. continuous dissipation, one ohm. Drive with 3-4 ampere pulse for approx. 2 ms.
Magnet Insulation	300 volt DC test. Transients must be suppressed to a voltage of less than 100 volts peak.
Synchronization Signals	Factory adjusted internal pickups. Punch timing unit provides 3 v.p.p. and Printer phase unit 1 volt peak-to-peak, ¼ ms duration from 1000 ohm source. Signal-to-noise ratio 10:1.
Recommended Drive Motor	To provide adequate starting torque, 1/3 HP induction motor, 3350 rpm, 115 volt, 60 cycle. Starting current, 10 amperes, max. Running current 2½ amperes.
Punch-Printer Starting Torque	70 ounce inches, max.
Lubrication	For printer, oil jet from internal gear type oil pump. Crankcase capacity 1½ fluid ounces. For Punch, see LP-2 characteristics.
Operating Thermal Rise	40°C for continuous operation at 100 codes per second.
Punch-Printer Cooling Requirements	The Punch-Printer and motor dissipate approximately 175 watts.
Environmental Operation	Design is such that severe environmental conditions can be met. Emphasis has been placed on adherence to MIL-E-16400 and MIL-I-26600.

See Punch Ordering Questionnaire, Page 68

PRINTER DRIVE AND CONTROL CIRCUITS — As is true of most high performance electromechanical equipments, the time constant of the PT-1 control magnets must be reduced through appropriate design of external drive circuits. Initial overvoltaging through use of series dropping resistors is necessary.

The PT-1 punches are warranted only if operated from the printer control circuits illustrated herein, and the LP-2 punch circuits illustrated on an earlier page. Circuits proposed for operation at voltages lower than 28 volts should be submitted to Soroban for engineering approval. Please note that the specified circuit inserts the series dropping resistor between the controlling magnets and the battery bus. The configuration provides protection against accidential application of full battery voltage to the coils by a test probe or clip lead shorting to ground during circuit debugging. Application of full battery potential to the coils is destructive.

The dog clutch, which consists of two discs on opposite sides of an eccentric, is described in detail on the previous page. As illustrated and described there, each disc contains a single hole, the holes being displaced 180° apart. In the technical discussion of the clutch control circuit which follows, phase "0" position is defined as that position where the left disc is positioned with its hole up, and the right disc with its hole down. In phase "1," the reverse condition exists. The accompanying curves show the relative positions of the holes in the clutch discs as the drive shaft is rotated.

As previously described, the clutches are engaged by magnetically positioning a coupling pin. When the position of an eccentric is to be changed, the pin must be inserted into one of the dog-clutch drive-discs during the 60 degree main shaft dwell period. The direction to move the pin (i. e. which magnet, A or B must be energized) is dependent upon the phase of the printer and the input code bit (zero or one).

The following rule governing magnet excitation covers the situation, as its operation will demonstrate:

Printer Phase	Input Code Bit	Turn On Magnet
"0"	0	A (left pull)
"0"	1	B (right pull)
"1"	0	B (right pull)
"1"	1	A (left pull)

The control can be performed with an exclusive "OR" circuit. If either the printer phase or the input code is "one," but not both, energize magnet "B"; otherwise energize magnet "A." Magnet "A" pulls the coupling pin to the left and magnet "B" pulls it to the right.

In the example illustrated in the timing diagram, three punch-printer cycles are shown. The incoming code bits are "1" in the first two cycles and "0" in the third cycle. The illustrated example shows the eccentric starting in the down or "0" position. The first cycle is of phase "0" as indicated by the printer phase sensing signal.

NOTE: THE ECCENTRIC WAS IN THE UP, OR "1" POSITION IN THE DOG CLUTCH'S CROSS-SECTION ON THE LAST PAGE

Since in this cycle, the phase is "0" and the input bit is "1," magnet "B" is energized. Magnet "B" pushes the coupling pin to the right. Since the hole in the right disc is in its down position, the coupling pin is pushed into coupled engagement. As the disc rotates, the eccentric with its coupling pin is delivered to its up or "1" position. During the succeeding dwell period, the print hammer is operated so as to print the selected character.

During the second printer cycle, the phase and input bit are both "1," so magnet "A" is energized. This pushes the coupling pin which is now in an up position towards the left, out of the right disc coupling hole, into bearing engagement with the left disc. Since the left disc coupling hole is in the down position, the pin merely slips against the polished flat surface of the left disc as it turns. The eccentric remains in the "1" position. During the dwell interval at the end of the drive cycle, the print hammer is again actuated.

Since in the next cycle (cycle three), both the input bit and the phase are "0," magnet "A" is again energized. The coupling pin is thereby pushed to the left into coupled engagement. As the drive disc rotates, the eccentric is returned to its down or "0" position. An examination of the punch signals indicates that neither a hole was punched, nor a tape-feed executed. Hence the print drum has been returned to a zero position. Actuation of the print hammer is inhibited.

Please note that the timing of the LP-2 perforator has been compromised in the PT-1 to permit both the printer and punch to be sequenced from but two timing reluctance pickups. The compromise has increased the punch magnet duty cycle from 55% to just over 80%, a duty cycle where the punch portion of a PT-1 could now consume a maximum average current of 4 amperes (8 level punch).

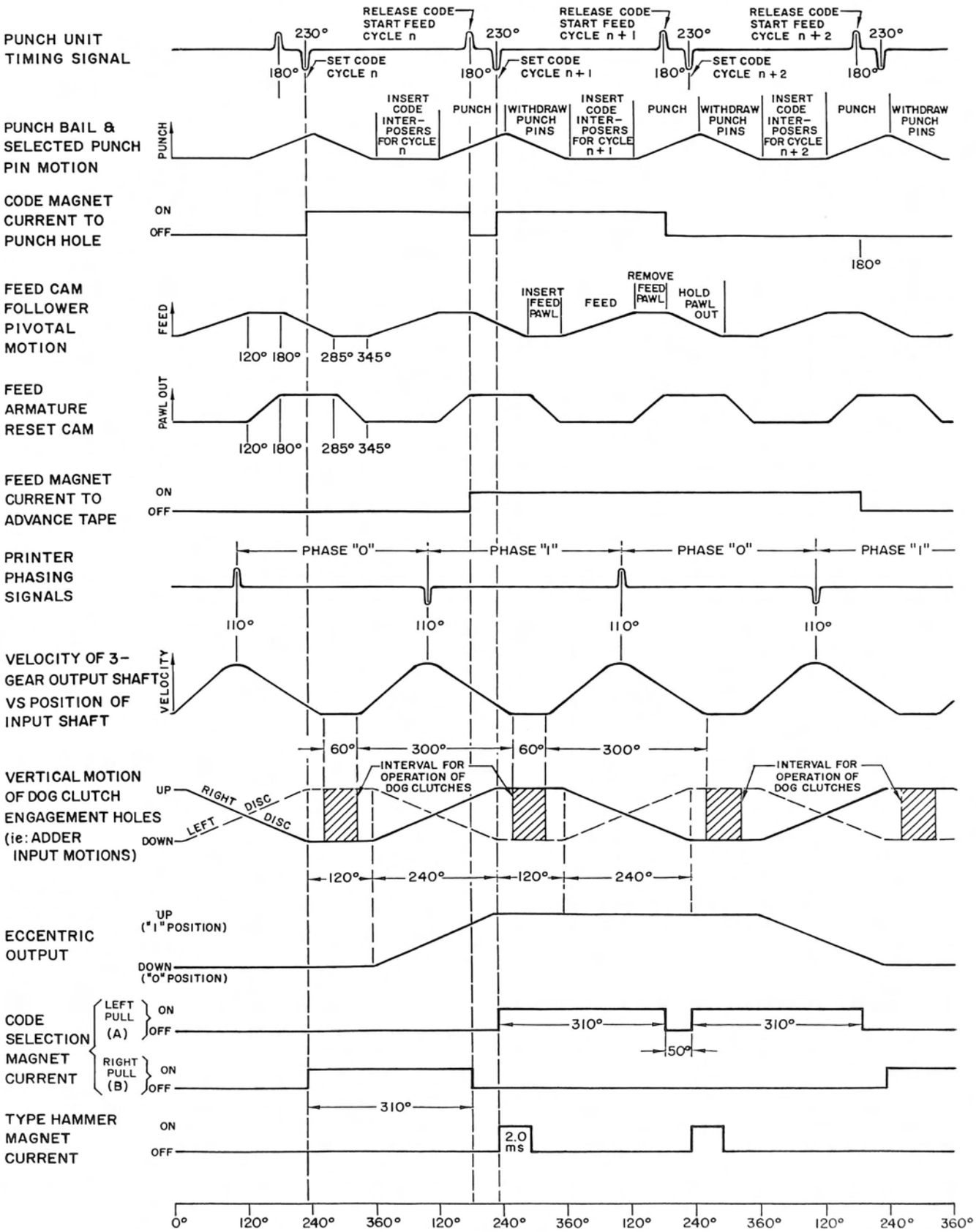

PUNCH-PRINTER MOTIONS AND CONTROL SIGNALS

PANEL AND DESK-TOP

All of the tape perforators described on earlier pages are available as components of a complete panel assembly which includes facilities both for supply of tape from rolls, or from packs of fanfold tape, as well as for tape pickup. In addition, the 150 cps LP-2 is available in a commercial quality package designed for desk-top operation (i.e. the LP-2-DESK). Although the latter is equipped with a roll tape supply system, tape spooling is not provided.

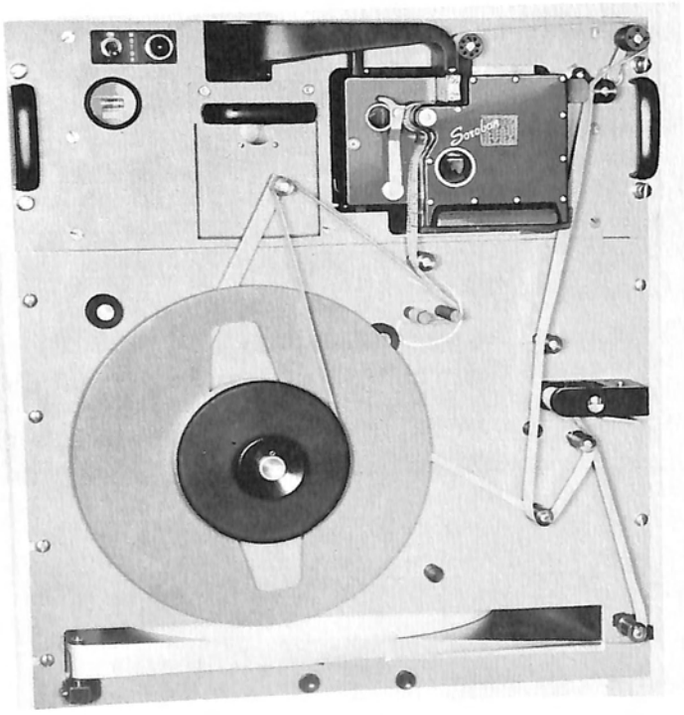

GP-2-300P5K PUNCH AND PANEL ASSEMBLY

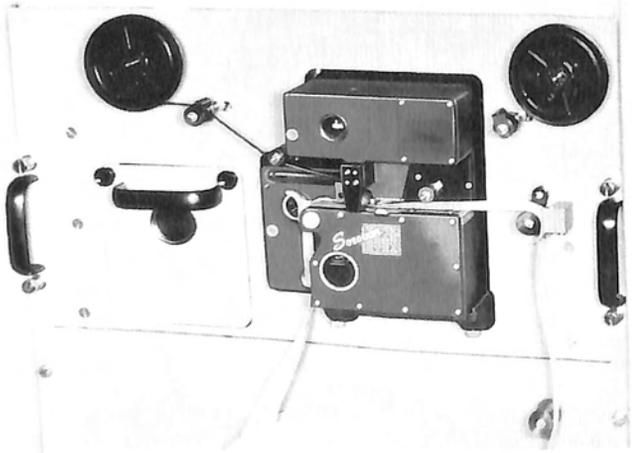

PT-1-PNS PUNCH AND PANEL ASSEMBLY

The Model GP-2 and LP-2 Tape Punches, and the PT-1 Punch-Printer, together with their drive motors but without panel mounts, cooling, or chad disposal, all weigh between 25 and 30 pounds. When panel mounted, their chad collection and drive belts become interlaced with other components to provide a compact but massive assembly serviceable only when exposed on all sides. Because the complete assembly now weighs between 50 and 60 pounds, normal screw mounting makes it excessively bulky and awkward to handle. Simple servicing requires that the punch and motor-mount panels be slide-hardware equipped.

By comparison, the tape supply and spooling panels are relatively light (20 to 30 lbs. max.) and easy to handle. Since only a small portion of the behind-the-panel volume is required for mechanical components, all unused space is available for electronic circuitry.

The similarities between the three punch motor-mounting panels are illustrated in the line drawings on the next page. Each of the three "Punch Motor-Mount Panels" can be operated in conjunction with any of the three "Tape-Handling Panels" which are sketched below them.

It should be noted that rolls of tape are used in all of the tape-supply devices pictured herein. Although use of fanfold tape permits simplifications in the

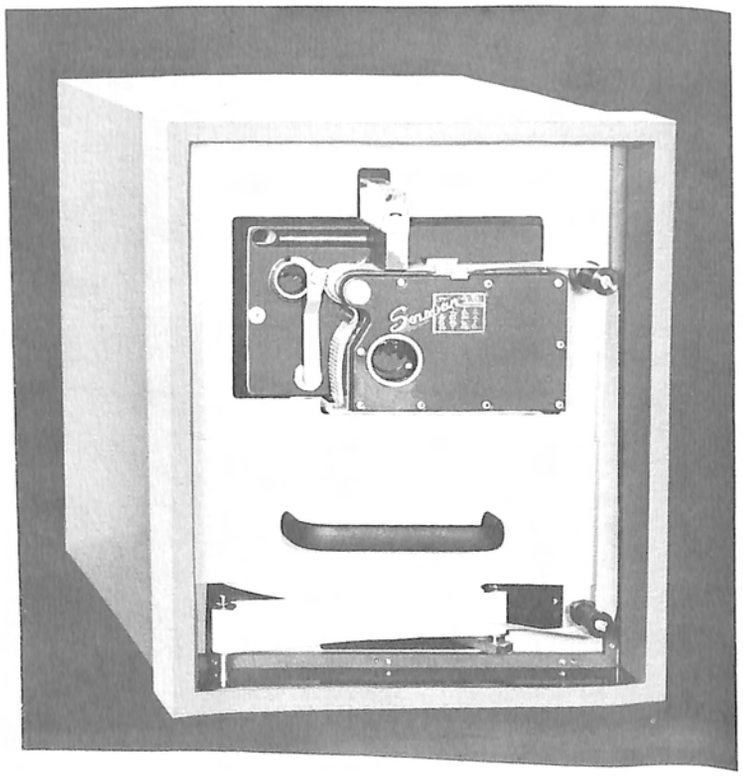

LP-2 DESK PUNCH AND CABINET ASSEMBLY

design of tape-supply devices over the equipments illustrated, fanfold tape has three inherent disadvantages. First, as generally manufactured, fanfold tape produces an abnormal amount of lint. The common method for producing such tape is for the manufacturer to periodically nick his slitting saws. Thus a full width of paper is first partially slit and then folded at full paper width. The fanfold packs are finally broken away from the main folded stack with a device resembling a butcher knife. The tufts, which are barely visible along the tape edge, spew an abnormal amount of dirt.

The dirt problem is so great that if intake of cooling air is at the front of a GP-2 punch operated with most commercial fanfold tapes, the cooling ducts become blocked within 48 hours of continuous operation. The second problem with fanfold tape results from the frequent occurrence of nicks at the folds. The nicks frequently bend back to produce a double tape thickness which will occasionally jam in the die block. The final complaint is price — with fanfold tape often quoted as high as three times the price of an equivalent length of rolled tape.

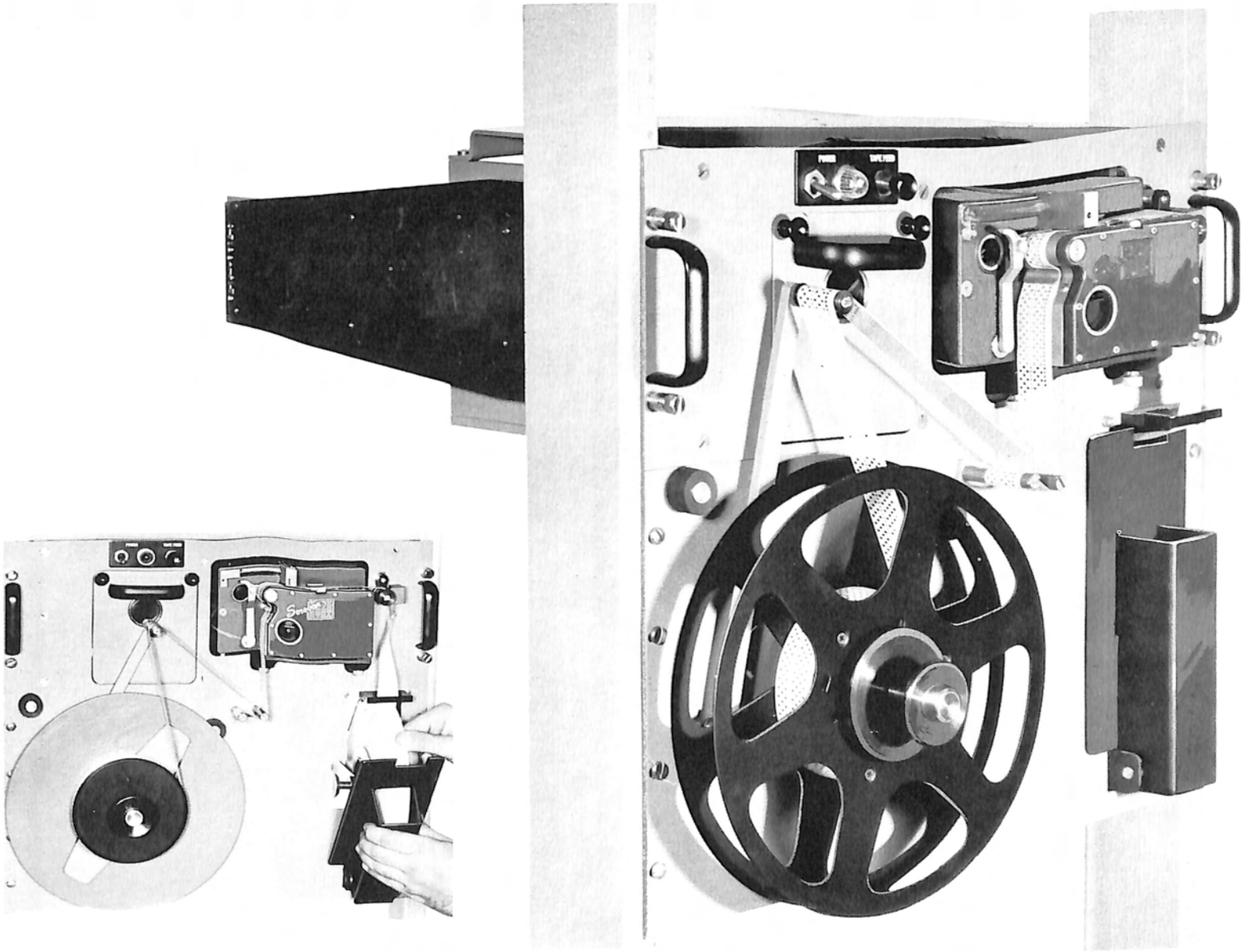

LP-2-150P PUNCH AND PANEL ASSEMBLY

PUNCH MOTOR-MOUNT PANELS

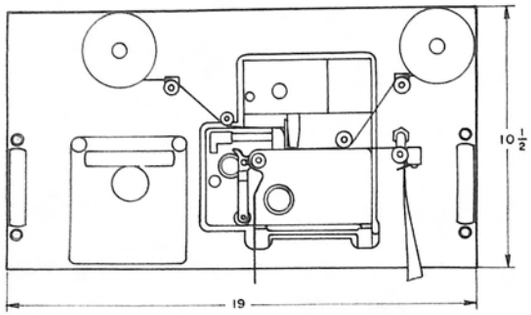

The **Model PT-1-100 Panel** consists of a 10½ inch high by 14 inch deep panel assembly for support of a Model PT-1 Perforator, its ink-ribbon mechanism, a vacuum chad collector, and induction drive motor with integral vacuum pump (the 100 in PT-1-100 designates operation at 100 codes per second, ± 5%). If data cannot be recorded at full speed, it is recommended that a lower speed drive more closely matching the data rate be provided (i.e. a 65 cps PT-1-65 would appear to be physically identical to the PT-1-100 except for the gearing between the punch head and its motor, and would be used for recording data which occurs at rates up to 60 codes per second – i.e. 65 less 5%). A "no-tape" switch is provided to sense the presence of tape as it enters the punch. Cooling blowers are not included as part of this assembly. The slide hardware equipped PT-1-XXX weighs 62 lbs., consumes 175 watts, contains a 115 volt, 60 cycle, 1/3 HP motor which requires 10 amperes of starting current and 2½ amperes of running current.

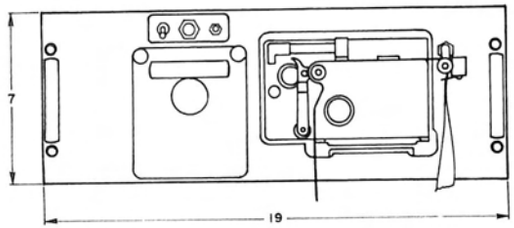

The **Model LP-2-150 Panel** consists of a 7 inch high by 14 inch deep panel assembly for support of a Model LP-2 Perforator, vacuum chad collector, and induction drive motor with integral vacuum pump (the 150 in LP-2-150 designates a nominal 150 codes per second drive wherein an induction motor drives the punch at a speed between 151 and 154 codes per second). A "no-tape" switch is provided to sense the presence of tape as it enters the punch. Cooling blowers are not included as part of this assembly. The slide hardware equipped LP-2-150 weighs 52 lbs. and consumes approximately 150 watts. The unit contains a 115 volt, 60 cycle, 1/3 HP induction motor with a 10 ampere starting current and 2 ampere running current.

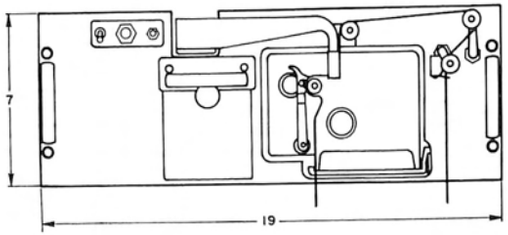

The **Model GP-2-300 Panel** consists of a 7-inch high by 14-inch deep panel assembly for support of a Model GP-2 Perforator, gravity chad collector, cooling air blower and duct system, and induction drive motor (the 300 in GP-2-300 designates operation at 300 codes per second, ±5%). Cooling air can either exhaust or intake at the lower front lip of the punch. If data cannot be recorded at the full data rate of the GP-2-300, the Model GP-2-240 (240 codes per second, ±5%) permits recording of data at rates up to 225 cps. If a minimum of 300 codes per second **must** be recorded, a special order hysteresis synchronous motor which extends 17 inches behind the panel can be provided. Although the synchronous motor will drive the punch at a speed between 305 and 310 codes per second, the poor starting torque characteristics require an equipment warm-up time in excess of 2 minutes as compared to the 5 to 10 seconds required for an induction motor. The power consumption of the synchronous motor is almost twice that of an equivalent induction motor. All GP-2-Panel Assemblies are equipped with a "no-tape" switch. The slide hardware equipped GP-2-300 and GP-2-240 both weigh 53 lbs. and consume approximately 275 watts. Both contain a 115 volt, 60 cycle, 1/3 HP induction motor with a 10 ampere starting current and 3½ ampere running current.

TAPE HANDLING PANELS

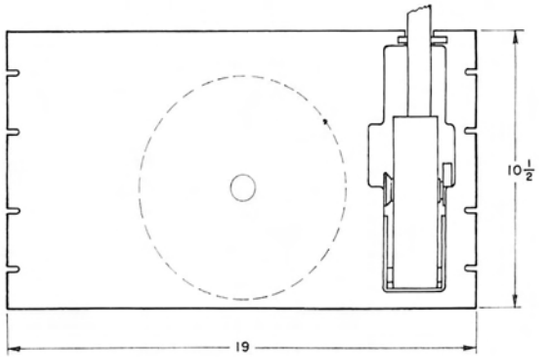

The **Model PNS Tape Supply Panel** contains a supply hub capable of supporting the standard 2" I.D. cardboard core of a 1000-ft. roll of paper tape (8" O.D.). When incorporated as the tape handling component of a GP-2 super-speed tape-punch system, the hub is mounted on low friction bearings. The hub assembly is equipped with a braking system operated by a slack arm. Thus, when punching is interrupted, the slack arm controls braking of the rotating supply reel to prevent tape spilling. The hub and brake assembly supports the supply reel in a plane normal to the plane of the panel. The supply mechanism extends 5 inches to the left of the right panel edge and 14 inches to the rear. For the lower speed punches, it is practical to use a simpler constant friction brake to prevent tape spilling. The tape-supply roll is often mounted on and parallel to the plane of the front surface when the constant friction brake is used. The PNS panels are equipped with both "tight-tape" and "low-tape" switches. A 300 code per second panel mounted GP-2 equipped with a Model PNS Panel is designated a Model GP-2-300 PNS Punch Assembly.

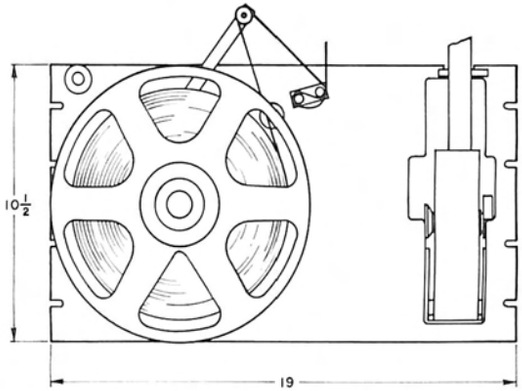

The **Model P Tape Panel** contains a tape-supply system similar to that described for the Model PNS, as well as a tape spooler. In the Model P Panel, tape is picked up and spooled onto a 10½ inch diameter NAB hubbed reel by an assembly which extends 7½ inches behind the panel. NAB hubbed reels are available with a removable edge flange and a removable central band. Tape either may be handled on the flanged reels or on center-feed supply devices by removal of the tape roll from the reel, followed by removal of the core band. The reel is driven from 1/40 HP, 1140 rpm induction motor rated at 7½ oz. in. full-load torque, with 0.9 ampere starting and 0.5 ampere running current. A bridge rectifier provides power for control of either a magnetic clutch which couples the reel hub to the drive motor, or a brake which brakes the rotating reel to a halt. Actuating signals for the clutch and brake are derived from the position of a spring loaded tape-tensioning slack-arm located between the punch head and the spooler. A "broken-tape" contact operates whenever tape tension is removed and the slack arm returns to its stop. A double-post snubber between the spooler and the punch decouples the 2-pound tape-spooling tension measured at the reel from being reflected to the sprocket. When the tape is properly threaded through the snubber, the pull on the tape at the sprocket is reduced to 6 ounces, or less. A 300 code per second panel mounted GP-2 equipped with a Model P Panel is designated a Model GP-2-300P Punch Assembly.

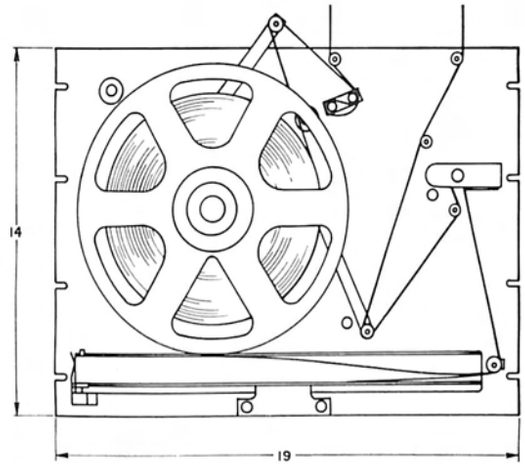

The **Model P5K Tape Panel** contains a tape spooler as is used in the Model P Panel, plus a tape supply system, of up to 5000 foot capacity. Tape is pulled from a supply roll by a pinch-roller drive-capstan powered by a 1/40 HP induction motor identical to that employed in the spooler. The solenoid actuated pinch roller is sequenced from a slack-arm sensing-switch. The equipment was designed to permit supply of tape from high inertia rolls. The horizontal tape tray which extends 17 inches behind the panel accommodates rolls of tape up to 16 inches in diameter. Paper tape is available on special order in 16 inch diameter 4000 foot splice-free rolls of .004 thick paper tape. Similar rolls of .003 inch tape contain in excess of 5000 feet of tape. The P5K Tape Supply System is equipped with both a "low-tape" and a "tight-tape" switch. A 300 code per second panel mounted Model GP-2 equipped with a Model P5K Panel is designated a Model GP-2-300P5K Punch Assembly.

PUNCH CONSOLES

Sound absorbing cabinet enclosures are available as Consoles to house all of the panel - mounted punches described on the previous pages, together with their driver and control circuits. For punches equipped with tape pickup facilities, access to the punch is through a glass door at the front of the cabinet. Since tape produced by perforator printers is generally read by the operator as it leaves the punch head, a plain cabinet as pictured is provided for the PT-1 Consoles. Available punch-panel assemblies are described on the previous page, together with their detailed operating specifications.

LP-2 CON PUNCH CONSOLE

All Soroban standard consoles are designed with a two - code buffer store which permits recording of asynchronous data at any rate up to the full speed of the punch. Input 5 to 8 bit codes are accepted by the consoles whenever the console buffer's "ready" line is on (i.e. at -10 volts). When the buffer is full, the "ready" line goes off. A "select" line permits remote control of the punch drive motor. Actuation of the select line by a -10 volt "NOR" drive signal turns the motor on. As soon as operating speed is reached, the "ready" line comes on. The select line is returned-to-zero when recording is complete, and the motor is to be turned off. As an optional feature, a time delay

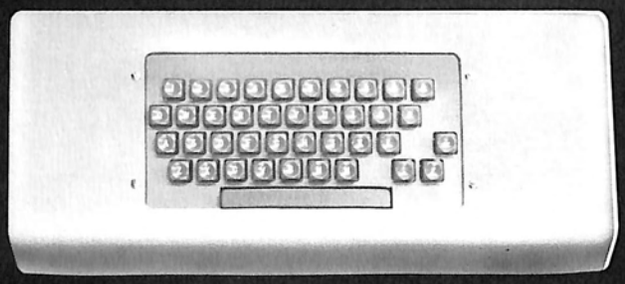

ALL SOROBAN CONSOLES ARE AVAILABLE WITH AN AUXILIARY ALPHAMERIC KEYBOARD DESIGNED TO PRODUCE TAPE IDENTIFICATION CHARACTERS. WHEN AN IDENTIFICATION KEYBOARD IS USED WITH A 300 CODE PER SECOND PUNCH, SYMBOLS SIMILAR TO THE HEADER TAPES ACROSS THE TOP OF THIS PAGE ARE PRODUCED AS FAST AS A TYPIST MAY MAKE HER KEYBOARD ENTRIES (SEE **FKP-IDENT** IN A LATER CATALOG SECTION).

relay can be provided which will retain power on the punch drive motor for a minute or more after the select line has been turned off. Thus, in a typical computer application where readout occurs relatively frequently (i. e. more often than once each minute), the motor will run continuously and the punch will remain constantly available for immediate recording.

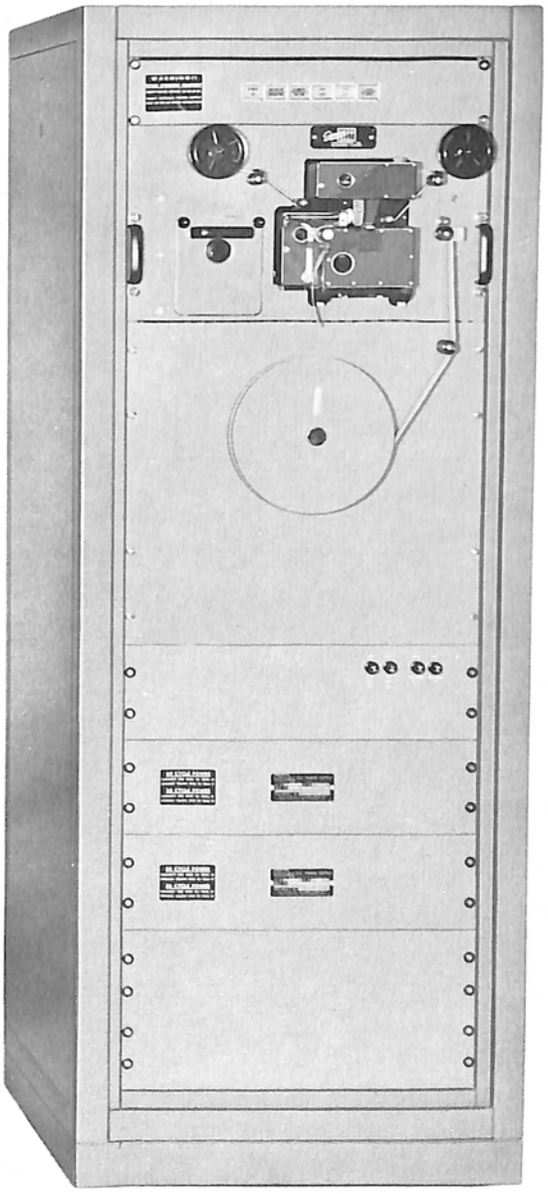

MODEL PT-1 PERFORATOR-PRINTER CONSOLE

CONSOLE SPECIFICATIONS

INPUT SIGNAL REQUIREMENTS:

Code Lines: The parallel input code lines feed diode "AND" gates equipped with a 15K pull-down resistor to –20 volts. A "zero digit" clamps the input to 0 volts. A "one digit" permits the input to fall to –10 volts. Although the rise and fall times are not critical, the code levels must be settled at least 20 microseconds prior to application of the read-strobe pulse, and remain stable until at least 5 microseconds after the read strobe has disappeared.

Read Strobe: The input read strobe feeds a "NOR" circuit of 10K input impedance. The negative strobe pulse must have a width at the top of at least 20 microseconds, and must start at 0 volts, fall to –10 volts and return to 0 volts, with 5 microseconds or less rise and fall times.

Select Line (i.e. Motor Start-Stop Control): The 10K impedance "select" line feeds a DC level into a "NOR" circuit. The motor "on" condition is represented by –10 volts, motor "off", 0 volts.

Tape Feed: An external contact closure of the two "tape feed" lines will cause tape to be fed for the duration of the closure. Although any code can be prewired to be punched during tape feed, tape feed usually consists of punching only the sprocket hole.

OUTPUT SIGNAL CHARACTERISTICS:

All output control signals are generated by "NOR" circuits with a 10 ma drive capability at 0 volts and a 1K pull-down resistor to –20 volts.

Buffer Ready: The buffer-ready line is used to control the input data rate. The "ready" line will be at –20 volts whenever the buffer is ready to accept data. At all other times the line will be at 0 volts. The buffer-ready line rises to zero approximately 2 microseconds after application of the read strobe, and remains at zero until the input code has been shifted to the second stage of the 2-code buffer store. The ready line fall is delayed between 30 microseconds and up to seven tenths of the basic punch cycle after removal of the read strobe. The buffer-ready rise and fall times are of approximately 2 microseconds duration as measured at the console with interconnecting cables removed.

Low Tape Warning: When tape reaches a preset low level, the low-tape line rises from –20 volts to 0 volts.

Tape Trouble Warning and Standby: The tape-trouble line rises from –20 volts to 0 volts when any of the following tape trouble conditions are present:

1. Out of tape or broken tape.
2. Tight tape.
3. Slack tape on takeup reel.

As long as any of these conditions are present, the "ready" line will remain at 0 volts, inhibiting the acceptance of input data.

MISCELLANEOUS CHARACTERISTICS:

Console Control Switches include Power ON, Motor ON, Feed, Standby, and ON Line.

Circuits: Transistorized throughout.

System Power Requirement: 115 VAC, 1 phase, 0.6KW. 10 ampere service is recommended.

Size: Approximately 63" height, 29" depth, 24" width.

See Punch Ordering Questionnaire, Page 68

MIL SPEC CONSOLES

Consoles have been designed, as illustrated, to permit adherence to Interference Control Specification MIL-I-26600. The consoles described here, while operating with doors closed, pass the Class III radiation tests: a test which places the probe 3 ft. from the test specimen. (Class I places the probe 1 ft. away; Class II, 25 ft. away.) Provided the equipment initially had been placed in operation with the doors closed and the tape pickup spooler remained unloaded, the equipments will pass the Class III test with doors open even while tape is being perforated. The tape spooler and power switches are the principal noise sources in a Model "P" panel assembly.

The MIL consoles either are available assembled and manufactured with highest quality commercial components, hardware, and techniques or wired for adherence to MIL-E-16400D or MIL-E-4158B, marked to MIL-STD-16, but with waivers with respect to set screws, lock washers, and binder-head screws. Printed circuit boards are to MIL-P-13949B and MIL-STD-275A, wire to MIL-W-16878, finishes to MIL-F-14072, etc.

The Model 1193 Consoles were first produced for instrumentation data recording. Although equipped with a typical Soroban console interface, a four-code buffer store was provided to permit acceptance of 4 code bursts of input data at high data rates. The punch then proceeded to record at the average nominal 300 code per second rate.

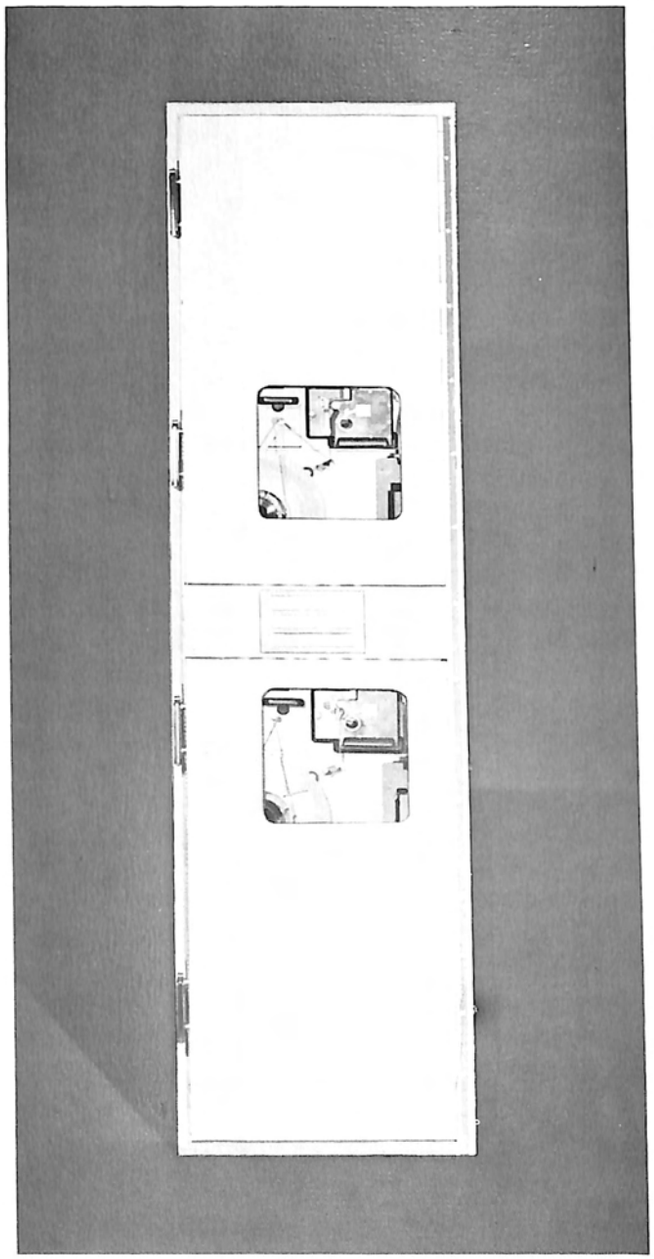

The Model 1104 Consoles were first produced for data recording as part of the 466L program. Two identical punch assemblies are provided in a single rack, one above the other, with each individually shielded from its companion. The circuits for both punches contain identical 2-stage buffer stores. Either punch may be used independently of the other, one or both operating simultaneously, or they may operate as a cooperating pair. In the latter mode, automatic transfer circuits are provided such that when low tape, broken tape, stuck tape, etc., is encountered recording is automatically transferred to the standby equipment.

MIL SPEC CONSOLES

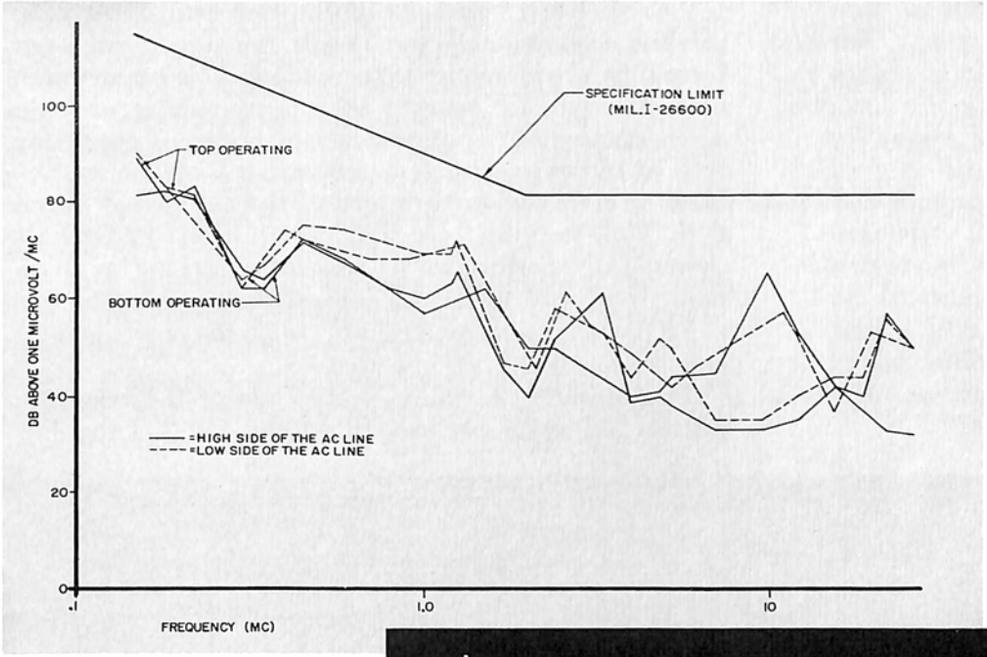

1104 Console

CONDUCTED RF INTERFERENCE
(POWER LINES)

RADIATED RF INTERFERENCE
(3 FT. PROBE)

1104 Console

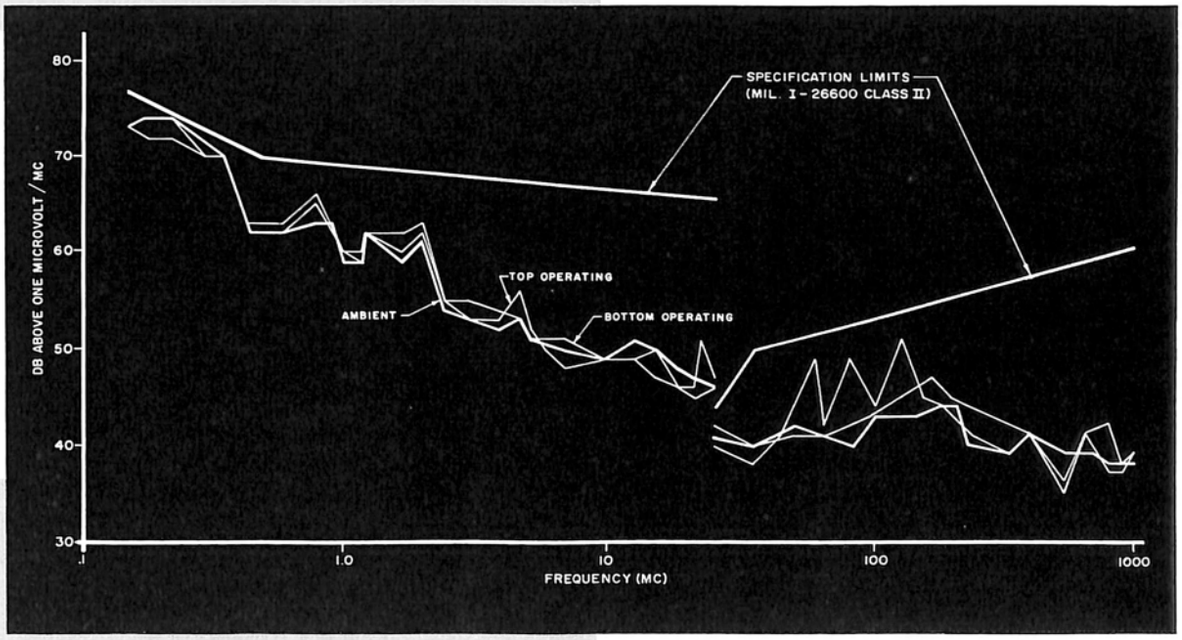

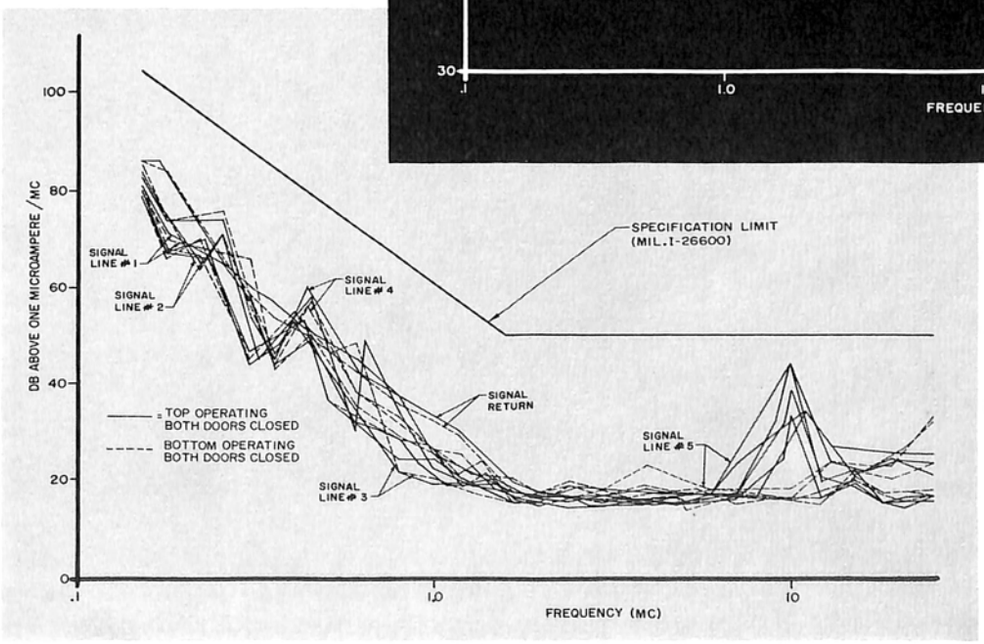

1104 Console

CONDUCTED RF INTERFERENCE
(SIGNAL LINES)

DATA TRANSMISSION SYSTEM

The Telephone Company's long awaited introduction of high performance digital subsets is now a reality. For a modest monthly rental, it is now possible to obtain telephone terminals which will accept data at pulse rates of up to 2000 bits per second (2400 bits per second on leased circuits). A normal voice telephone call is first placed from the telephone data-set terminal, through dial or operator exchanges, to a remote terminal. After exchanges of verbal instructions and salutations, operation of a switch reconnects the voice telephone circuits to the data mode. The new and improved Model 201 Data-Phone Subset permits Soroban's readers and punches to transmit taped data over common dial circuits at rates of up to 2850 words per minute.

The sending terminals of the Soroban data-transmission systems use the newly developed high-performance anemometer tape readers. Use of anemometer elements for sensing of tape punching provides a design capable of thousands of hours of operation, free of either mechanical adjustment of the reading head or electrical adjustment of the associated amplifiers. Tape varying from transparent plastics to opaque paper, fully perforated or chadless, varying in thickness from .001 inches to lapped splices of .004 inch thick paper, can be read reliably with the new anemometer sensing FRA-1 Tape Reader.

The receiving terminal makes use of the tried and proven 300 code per second Model GP-2 Tape Per-

MODEL DTD SYSTEMS; TRANSMITTING STATION AT LEFT, RECEIVING STATION AT RIGHT

forator, a punch which has been in production since 1958. Field performance, throughout the world, both in industrial and military applications has verified a mean-free-time-between-failures for present production well in excess of 1000 hours. One military net is now reporting an MTBF of nearly 3000 hours.

When the punch and reader are applied to the transmission of the punch tape recorded data, circuits are provided to fully check all data transmitted. The system compensates for line failures of the communications circuits as are produced by fading signals or interfering noises. Not only is each transmitted code checked, but blocks of codes are also periodically checked. When errors are detected, all data transmitted since the beginning of an identified block is automatically retransmitted. The detailed operation of the Soroban DTD system is described in the paragraphs which follow.

Data is transmitted parity checked character-by-character (i.e. vertical check), as well as parity checked by groups of characters (i.e. horizontal check). In applications where the transmitted data is already parity checked character-by-character, the data transmission system uses the existing check bit; otherwise a new check bit is generated and added to the transmitted code. One bit at the beginning of each transmitted character is required for system synchronization. Thus the 2000 bit rate of the Model 201A Data Set permits transmission of a maximum of 285 characters per second (2850 words per minute) of common 5-bit Teletype code, a code lacking checking. Since 8-bit data usually includes a check bit, 9-bit positions are required for each transmitted code, reducing the data transmission rate to a maximum of 222 eight-bit codes per second. The Soroban DTD data transmission systems accommodate transmission of 5, 6, 7, or 8 level data containing either parity checked or unchecked data codes.

The DTD accommodates two modes of transmission; the continuous and retransmit modes. In both, transmission commences with a beginning-of-block code (begin-code), and terminates with an end-of-block code (end-code). The continuous mode will be described first. If the input tape contains parity checked data, checking is performed both prior to and after transmission. Error substitute codes are recorded for all errors, whether detected before or after transmission. The transmission continues uninterrupted until manually stopped, or stopped by transmission of a stop control code.

In the retransmit mode, the receiver automatically terminates recording and punches a *bad-block* code whenever the data-subset's carrier is quenched prior to receipt of an *end-code*. Recording is resumed only upon restoration of carrier and receipt of a *begin-code*. Thus if a tape-reading error is detected, further reading is inhibited and the data subset's carrier is turned off. The reader automatically backs up to the beginning of the block, and commences retransmission of the *begin-code*, followed by the data block.

If an error were detected at the receiving end, a *bad-block* code would be recorded and further recording would be inhibited. The reader would continue to the block's end. If accurate reception were not acknowledged, the reader would automatically backup to the block's beginning for retransmission.

SPECIFICATIONS

Data Phone Subsets	Soroban DTD data transmission terminals are designed for operation with either the 2000 bit per second Model 201A Data Phone Subset, or the 2400 bit per second Model 201B Data Phone Subset.
Transmitter	Model DTD-R employs the 300 character per second Model FRA-1 Tape Reader.
Receiver	Model DTD-P employs the 300 character per second Model GP-2 Punch.
Transceiver	Model DTD-PR.
Speed	2850 words per minute max. for 5-hole tapes (using Mod. 201A Subset). 2220 words per minute max. for 8-hole tapes (using Mod. 201A Subset). Models available for use with 5, 6, 7, or 8 level standard communication or data tapes, or 6 level Teletypesetter tape.
Circuitry	Solid state throughout.
Radio Interference	Negligible.
Reliability	1000 hours MTBF.
Checking	Vertical and horizontal parity checks, internally generated or as recorded on the tape.
Automatic Controls	Automatic block retransmit, error stop, and error substitute modes are provided.
Power Consumption	1.2 KW - 115 VAC single phase. A 20 ampere service is recommended.
Floor Space Requirements	2½ ft. x 5 ft., exclusive of telephone Data Subset.
Height	5½ ft.
Weight	1200 lbs.

CARD PUNCHES

An extension of the design philosophy applied to their very high performance tape perforators has now permitted Soroban to release the first truly high-speed card punch. Cards are end-fed through the EP-4 punch head in much the same fashion as tape is fed through the Soroban Tape Perforators. The punch is designed to permit recording of data in all hole positions of all standard sizes of IBM cards at the rate of 720 columns per second; a speed which permits perforation of a minimum of 450 fully laced 80 column cards per minute.

Because comparable techniques, linkages and design margins are used in both, reliabilities and life expectancies of the new EP-4 card punch are expected to be comparable to those obtained from the Super-Speed Tape Perforators. The latter first entered production in 1956, the year Soroban delivered the first 240 code per second punch ever produced. Towards the end of the next year, while eleven more identical equipments were manufactured, design of the present 300 code per second tape punch was initiated. That unit entered production in the fall of 1958. Field performance throughout the world, both in industrial and military applications, now has verified a mean-free-time-between-failures for the present design well in excess of 1,000 hours. Although this performance is only typical of what has been achieved from Soroban's tape punching equipments, comparable performance is expected from the newly introduced card punch heads.

The EP-4 card punch uses a shuttle for transport of cards. The shuttle's translational drive motion contains dwell intervals at both extremes of its cyclic stroke. To initiate feed, a card is clamped during the first dwell interval. The shuttle then picks up the card, transports it, and finally returns it to rest after precisely advancing it four columns. The clamps are released during the second dwell interval, after the card has been completely returned to rest. Friction brakes hold the card positioned between feed operations.

Punching is performed by a bail interposer system employing positive interposer reset. The cyclic punching motions also are provided with a dwell interval which occurs while the punch pins are fully retracted. Card feed is executed and the interposers associated with punching of the succeeding code are positioned during the one-third cycle punch-bail dwell-interval.

CARD FEED—Reciprocating motions for sequencing card transport are derived from a pair of cams and followers which produce both the cyclic shuttle motion and the clamping motion. A three lobe constant diameter cam and follower, similar to those which have proven so effective in the Soroban tape punches, produces a shuttle motion containing 60 degree dwell intervals at both extremes of its stroke. The selectively controlled clamping action is derived from a specially contoured cam whose function may be compared to that of the feed knock-off cam in the Model GP-2 Tape Perforator (see pages 1 to 3 of this catalog).

An examination of the accompanying card-punch line-drawing reveals details of the card feed mechanism. Although the three-lobe cam is obscured, the gussets of the feed cam-follower are visible, as are the follower's pivot-shaft and drive-cranks. As the follower

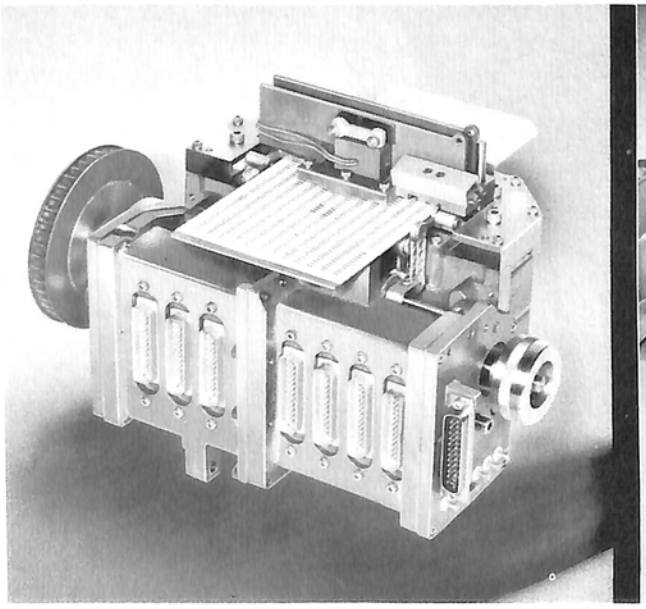

MODEL EP-4 CARD PUNCH. The Array Of Connectors Provides Leads For Both The Code Magnets And Checking Reluctance Pickups.

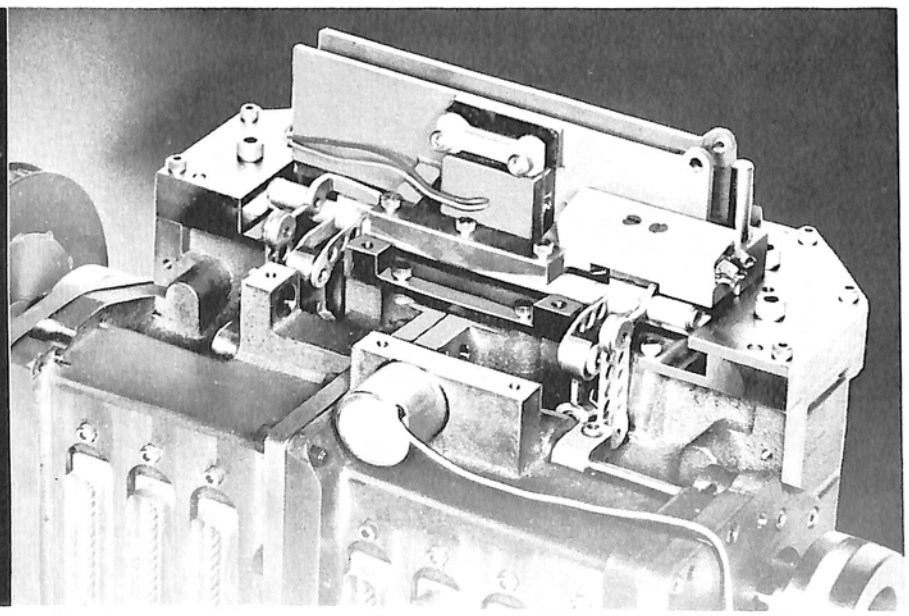

MODEL EP-4 CARD PUNCH With Exit Card Guides Removed

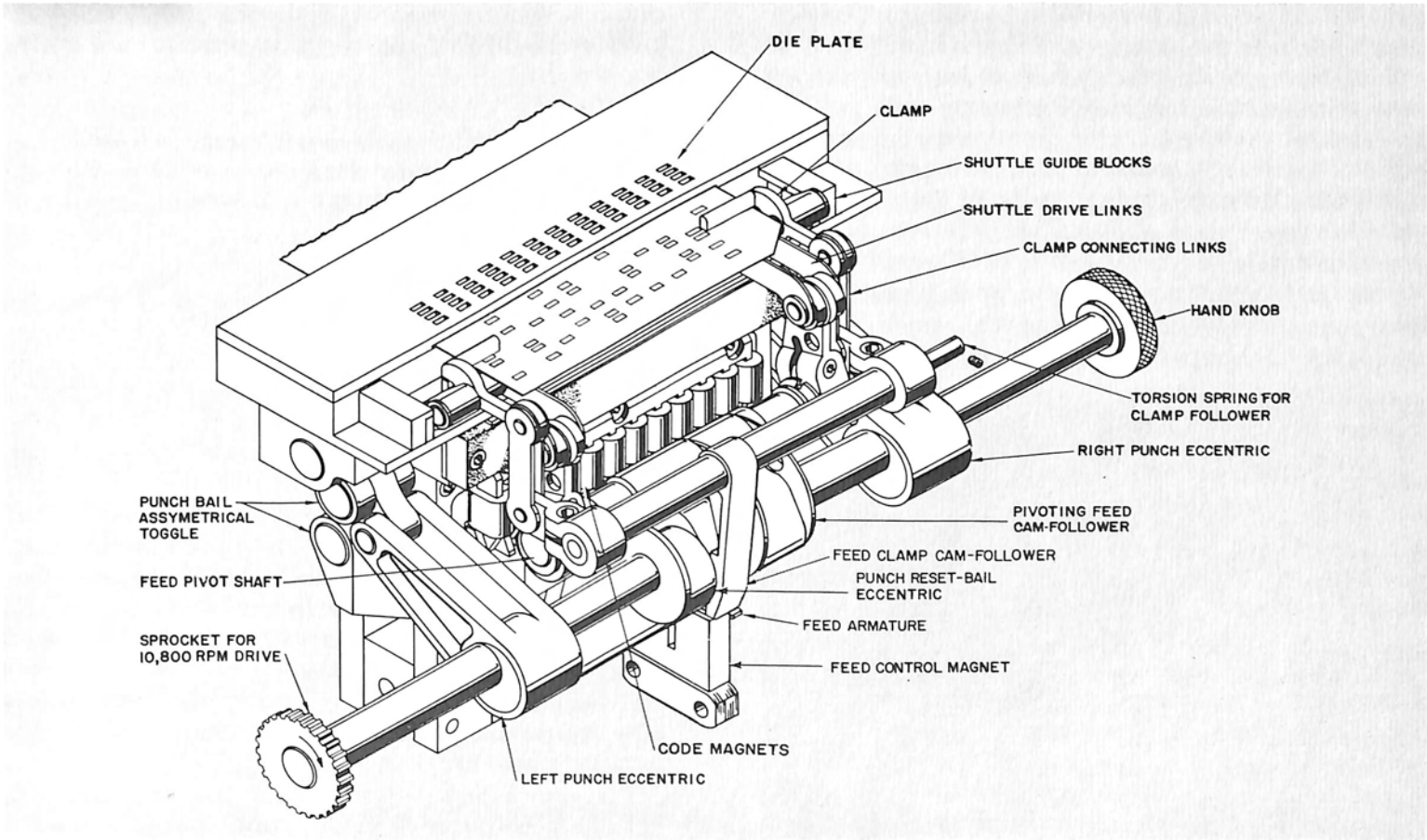

MODEL EP-4 CARD PUNCH PICTORIAL

pivots, its drive cranks position the shuttle through the "shuttle drive links." Card clamping is accomplished by clockwise rotation of the clamp cam-follower. The feed clamp is latched in the open position by rotation of the main drive shaft during intervals when the feed magnet is de-energized. Rotation of the clamp's cam lifts the follower free of the feed armature, permitting the armature's return spring to position the armature beneath the extension of the clamp-follower. The resulting latch holds the feed clamps open during power-off. Card feed is redirected during the interval when the feed-clamp-cam again rises and unloads the feed armature.

Card transport accuracies improved over the ± .007 inch tolerable accumulated feed error for a full 80 column card, as specified in the latest EIA proposed standards, are easily achieved. It should be noted that 80 columns of feed represents but 20 card transports. By comparison, Soroban's present production Tape Perforators which also employ a three-lobe cam for feed, demonstrated a feed registration of better than ± .005 inches in 120 transports. This registration holds accurately, without adjustment, for more than 2,000 hours of continuous operation.

It is believed realistic to make a comparison of the feed transport stability and accuracy of the present production tape punches with the feed accuracy of the Model EP-4 Card Punches. Reference to page 2 will show that the tape punches also contain a feed mechanism which appears to gage fixed increments of tape during transport. However measurements show that adjustment of feed is accommodated over a range of ± .050 inches in 6 inches of punched tape without sprocket hole deterioration. Adjustment merely involves rotation of the tape-feed mechanism so as to relocate the sprocket feed pins with respect to the sprocket punch pin. The fact that the tape is supported on sprocket pins located a fixed distance apart and which are rotated through a fixed angle during transport does not have any apparent influence on the ease or stability of adjustment over the ± .050" incremental adjustment range. Perhaps the most significant factor regarding feed stability in both the Soroban card and tape punches results from the nature of their feed cyclic motions. In both the card and tape punch, the transported media is smoothly picked up from rest, transported, returned to rest, and only when at rest is the feed mechanism disengaged.

CARD PUNCHING — Reciprocating motions required to drive the punch pins through the card, as well as sequence the interposer reset bail, are derived from asymmetrical toggles. Connecting rods position the knees of the toggles with motions derived from a pair of eccentrics. The asymmetrical toggles produce positive displacement drive motions for both the punch and interposer reset bails. The positive displacement drive provides motions free of resonance effects so prevalent in the more common spring-loaded cam-follower systems. The asymmetry of the punch and reset bail toggles has been selected to provide a dwell interval equal to approximately 1/3 of each punch cycle. As mentioned, the feed shuttle transports the card during this dwell interval.

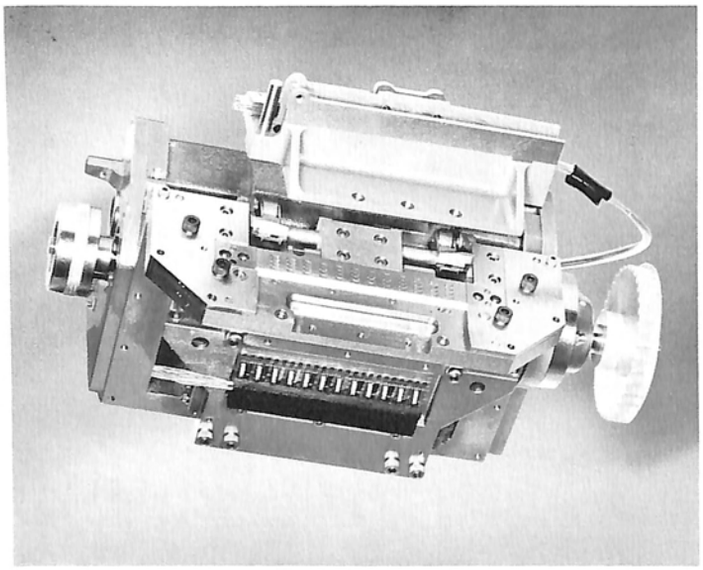

MODEL EP-4 CARD PUNCH WITH CHAD CHUTE LIFTED OFF. Removal Of Front Housing Exposes Interposers And One Magnet Stack.

In the EP-4, interposers selectively couple thrust from the punch bail to drive the selected punch pins through the card. During the upward punching stroke, the interposer reset bail also rises. During the punch bail's return, the punch pins are positively withdrawn while the stationary reset bail concurrently drives the captive interposers to their reset positions adjacent to their respective control magnets. The reset bail begins to retreat only when the punch bail has fully retracted all punch pins, and reset all interposers. Since the interposers are also code magnet armatures, the reset operation positions the armatures at the minimum air-gap position. To maintain an air-gap closed and hold an interposer out, holding current is applied to code magnets for those channels where data is *not* to be punched during the succeeding cycle. In channels where data is to be punched, power is removed from the code magnets for the interval commencing just before the punch bail begins to retract the punch pins, until shortly after it initiates its succeeding punching stroke.

The punch bail design not only permits punching of fully laced paper or plastic cards, but also permits steel shim stock to be perforated by one-third of the punch pins without mechanical overload of the bail-interposer system. It should be mentioned that punching of metal cards, particularly those harder than Rockwell 30, is not recommended.

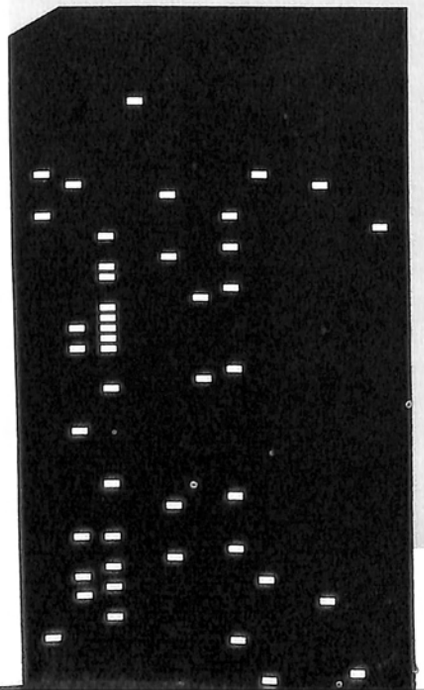

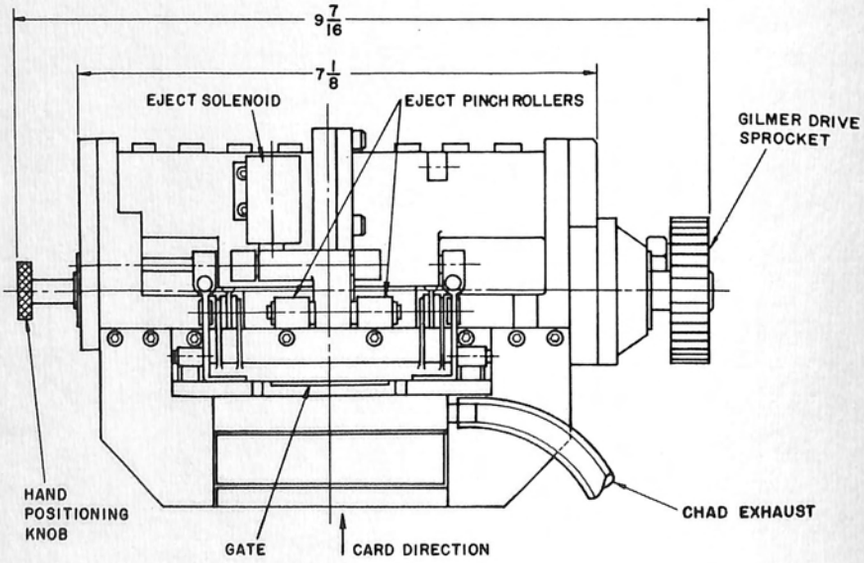

MODEL EP-4 CARD PUNCH OUTLINE DIMENSIONS

CARD HANDLING — Cards are delivered to the Model EP-4 Punch through the die gap while sliding against a specified edge guide. Once delivered, cards are held against the gate by friction brakes. When punching is to commence, all external card driving forces are removed, the gate is dropped, and the shuttle clamps are actuated to commence transport of the card.

When card punching has been completed, a card may be ejected from the EP-4 at high speed through actuation of the eject capstan. Thus, if all recorded data is programmed towards the beginning of the card, the effective card handling rate will be dependent upon the number of columns punched per card and the available pickup velocity of the associated card stacking mechanism.

The EP-4 card punch may be sequenced at rates up to 180 punch cycles per second. Each cycle permits punching of data in four adjacent columns of a standard IBM card. One punch cycle is consumed by various electrical and mechanical components after a card is delivered to the punch head before punching may commence. Two punch cycles are required to fully eject a fully punched card, or transfer the feed of a partially punched card to the ejection card transport.

It should be noted that either punching or card transport may be inhibited for any selected one (or more) feed or punch cycle.

CHECKING — The Model EP-4 can be provided with facilities for checking when required. Checking is accomplished by providing tab extensions on the sides of the punch pins. When a punch pin has traveled far enough to penetrate the die plate, the tabs close a magnetic circuit to produce a pulse of given polarity. A pulse of opposing polarity is produced when the pin is withdrawn.

Card gaging stations are provided to check the accuracy of card transport. The stations are provided to gage the position of the leading edge of the card to ± .007 inches when it has been advanced 16, 36, 56, or 76 columns. It should be noted that checking is an extra feature, provided at additional cost.

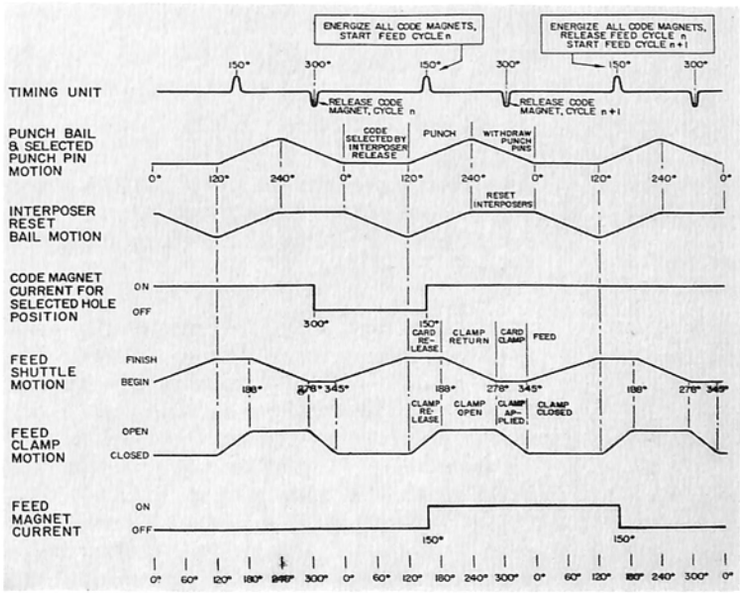

MODEL EP-4 CARD PUNCH TIMING DIAGRAM. Indicated Magnet Currents Illustrate Control Of Card Feed Plus Punching Of A Selected Hole During Cycle "n."

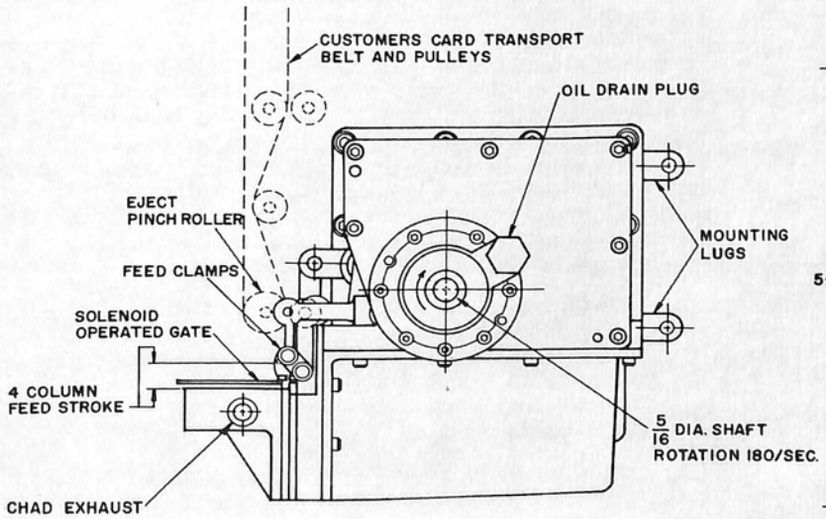

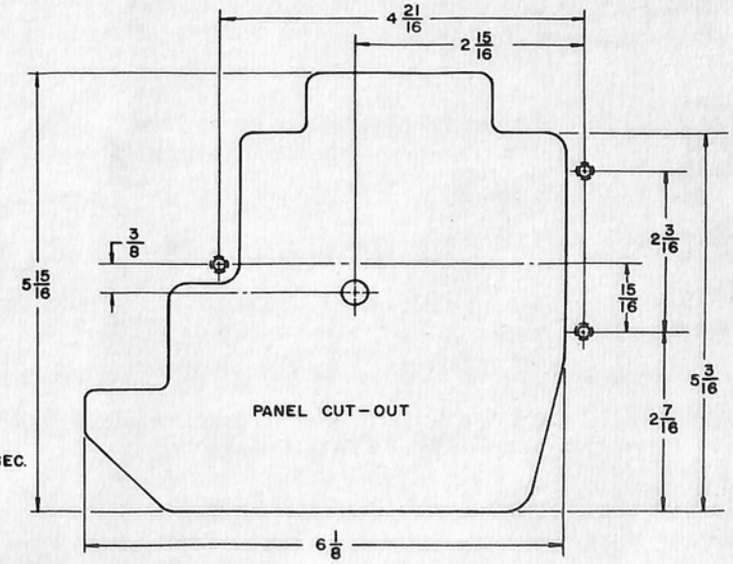

MODEL EP-4 CARD PUNCH SPECIFICATIONS

The Soroban Model EP-4 Card Punch consists of a very compact high performance card punching head which occupies a space comparable to that now occupied by most card reading heads. Introduction of the EP-4 was intended to permit existing manufacturers of end-feed card-reading equipments to add a high speed card punch to their product line with a minimum of redesign. Through use of the Soroban punch head, similar card stackers and picking mechanisms now may be employed in both their readers and punches:

Operating Speed	180 four column punchings per second. 450 fully laced 80 column cards per minute. 650 fully laced 51 column cards per minute.
Punch Size	10"x6"x6", approximately.
Punch Weight	20 lbs. without motor.
Lubrication	An oil pump provides oil jet lubrication. Lubricant is circulated through an external heat exchanger not pictured in the accompanying figures.
Code Magnets	48 identical magnets control punching of each of the 48 hole positions. Magnets with 60 ohm coils are driven with approximately 200 ma. Operation should be from a 28 volt supply with a 75 ohm 5W series resistor. Transients should be suppressed to a voltage of less than 100 volts peak. The open air-gap inductance of 60 mh increases to 90 mh when the .002 minimum air gap is reached. The resultant maximum time constant is 0.6 ms. During full speed operation, 2.8 ms is available for magnet drop-out; 3.5 ms for magnet pickup.
Feed Magnet	6 ohms, 10 to 14 mh, 3 watts. Drive circuit design center, 600 ma, as obtained from a 28 volt source with a 40 ohm 25W series dropping resistor.
Sync Signal	4 volts peak-to-peak, ¼ millisecond duration, into 2000 ohm load. Signal-to-noise ratio, 10:1 or better.
Drive Motor	1 HP at full speed.
Card Delivery Characteristics	Cards are delivered oriented and sliding against a guiding edge, at velocities up to 200 inches per second.
Card Life	Cards may be passed through the punch ten times without visible damage.
Hole Characteristics	Rectangular IBM holes held at least to the spacing and size tolerances specified in Electronic Industries Association proposed standard as published by Engineering Committee TR 27.6.1, March 1962.

MODEL EP-4CON CARD CONSOLE SPECIFICATIONS

To accommodate the demand for high-speed Card Punches equipped with card handling facilities, Soroban has initiated plans for release of a Model EP-4CON Card Punch Console. The console's card handler is to permit operation of the EP-4 punch head at a nominal 450 cards per minute for fully laced 80 column cards. Although the equipment is to contain an electrical interface as described in these specifications, mechanical details of the EP-4CON's card handlers are not available.

INPUT SIGNAL REQUIREMENTS:

Code Lines: Twelve code lines accept a single column of data in parallel. Data to be recorded is provided serially by columns. The parallel input code lines feed diode "AND" gates equipped with a 15K pull-down resistor to –20 volts. A "zero digit" clamps the input to 0 volts. A "one digit" permits the input to fall to –10 volts. Although the rise and fall times are not critical, the code levels must be settled at least 20 microseconds prior to application of the read-strobe pulse, and remain stable until at least 5 microseconds after the read strobe has disappeared.

Read Strobe: The input read strobe feeds a "NOR" circuit of 10K input impedance. The negative strobe pulse must have a width at the top of at least 20 microseconds, must start at 0 volts, fall to –10 volts and return to 0 volts, with rise and fall times of 5 microseconds or less.

Select Line (i.e. Motor Start-Stop Control): The 10K impedance "select" line feeds a DC level into a "NOR" circuit. The motor "on" condition is represented by –10 volts, motor "off," 0 volts.

Card Eject: The 10K impedance eject line feeds a negative pulse of similar duration and shape to the read strobe. The eject pulse is provided concurrently with delivery of the read strobe associated with the last column of data to be recorded.

OUTPUT SIGNAL CHARACTERISTICS:

All output control signals are generated by "NOR" circuits with a 10 ma drive capability at 0 volts and a 1K pull-down resistor to –20 volts.

Buffer Ready: The buffer-ready line is used to control the input data rate. The "ready" line will be at –20 volts whenever the circuits are ready to accept data. At all other times the line will be at 0 volts. The buffer-ready line rises to 0 volts approximately 2 microseconds after application of the read strobe, and remains at zero until the input code has been shifted to the next stage of the 4-column buffer store. The ready line falls 30 to 50 microseconds after the trailing edge of the read-strobe pulse associated with delivery of the 1st, 2nd, and 3rd columns of data. The ready line's fall is delayed approximately 4 milliseconds after delivery of the 4th column, during which interval card punching is performed. If all 4 columns of data are not supplied within one millisecond, the associated controls inhibit punching until the next mechanical punching cycle.

Once ejection of a card has been signalled, the ready line is switched to the "off" position until a succeeding card has been picked, delivered to the punch head, and positioned for recording. The buffer-ready rise and fall times are of approximately 2 microseconds duration as measured at the console with interconnecting cables removed.

Low Card Warning: When the card supply reaches a preset low level, the low-card line rises from –20 volts to 0 volts.

Card Trouble Warning and Standby: The trouble line rises from –20 volts to 0 volts when out of cards, etc. As long as trouble conditions are present, the "ready" line will remain at 0 volts, inhibiting the acceptance of input data.

SERIAL PAGE PRINTERS

During 1960, Soroban initiated the design of a High-Speed Serial Page Printer. Now, two years later, two separate designs are nearing production. In each, a compact print drum is positioned both in rotation and translation to a discrete position. Printing occurs during a dwell interval immediately following drum positioning.

The MT-1 Printer contains a one-inch long, 5/16 inch diameter print drum. The drum is supported by a carriage which is escaped across the page. When positioned, the drum is nodded into printing contact with the copy. A printing and escapement cycle are executed in 10 milliseconds. Although the MT-1 could be produced to print 64 discrete symbols, present production is planned to accommodate printing of but 56 symbols.

The second printer, the MT-50, is an extension of the CT-1 Columnar Printer described on the next page. The MT-50 contains a series of type fonts which form a stick the width of a page. A 4-bit digital positioner positions the 16 symbol type font bands to the specified rotational position. A three-bit digital positioner accommodates 8 translational positions. A print hammer mechanism, behind the copy, is escaped across the page to accommodate printing in the specified column. The MT-50 is designed to print up to 128 different symbols on a 97 character line with 25 milliseconds required per print and escapement cycle.

MT-1 SPECIFICATIONS

Printing Speed	Up to 100 characters per second (nominal), or a line consisting of 100 characters in one second.
Print Size	10 characters per inch – office typewriter size Pica for alphabetical symbols.
Platen	Standard typewriter width to accommodate paper 11 inches wide. For 12 inch carriage width pin-feed platens, see page 36.
Paper	Pin-feed for fanfold sheets and forms. Rolls or individual sheets may be accommodated with standard platen.
Copies	Six carbon paper copies may be produced.
Power	115 volts, 60 cycle for ½ HP drive motor.
Input Signals	Six-bit input codes.
Noise Level	Comparable to Electric Typewriter.
Characters	56 character print drum is standard. Special characters or symbols may be specified. 64 symbol print drums accommodated on special order.
Format	Under external control.
Weight	Approximately 60 lbs. including ½ HP drive motor.
Volume	Approximately 1½ times the volume of a standard typewriter.

MT-50 SPECIFICATIONS

Printing Speed	Up to 40 characters per second (nominal).
Print Size	10 characters per inch – office typewriter size Pica for alphabetical symbols.
Platen	Standard typewriter width to accommodate paper 11 inches wide. For 12 inch carriage width pin-feed platens, see page 36.
Paper	Pin-feed for fanfold sheets and forms. Rolls or individual sheets may be accommodated with standard platen.
Copies	Four carbon paper copies may be produced.
Power	115 volts, 60 cycle for 1/3 HP drive motor.
Signals	Seven-bit input codes.
Noise Level	Comparable to Electric Typewriter.
Characters	128 character print drum is available.
Format	Under external control.
Weight	Approximately 45 lbs. including 1/3 HP drive motor.
Volume	Approximately 1½ times the volume of a standard typewriter.

SERIAL COLUMNAR PRINTER

In recent years, an increasing need has developed for instrumentation data recorders, or columnar tabulators, which print numerical information in 15 to 20 adjacent columns. Generally, simultaneous digital readings are taken from associated instruments and transmitted in parallel to the printer for logging. The parallel transmission and recording involves expensive and bulky cabling, as well as repetitive volumes of electronic control circuits.

Soroban's introduction of the CT-1 Serial Columnar Printer now permits high-speed serial transmission and inked printing, character-by-character, of 22 character lines of data. Serial printing at a rate of 100 characters per second permits twenty-four different print symbols to accommodate data logging at speeds of nearly 5 lines per second.

The availability of a long life, rugged device which can position a print drum, or matrix, in both rotation and translation at high speeds makes the CT-1 feasible. Such a device was developed to print along the edge of a punched paper tape. In that application, the mechanism positions a print drum to one of eight positions in both rotation and translation to accommodate up to 64 discrete symbols. The print drum is stationary for approximately 1/3 of each print cycle, during which time the print hammer makes its impression. Photographs of the digital positioner and its drum, plus a detailed description of its operation are presented on pages 10 through 15 of this booklet.

Since the CT-1 was designed to use the identical print drum positioning mechanism as the PT-1, both using interchangeable and identical parts, it was necessary to limit the length of the CT-1 type font to 3 inches. This length permitted production of a columnar printer with a full 64 symbol alphameric capability which printed a 17 character line, or one which printed 24 symbols on a 22 character line. Since full alphameric printing on a very short line is of little value, while a 24 symbol 22 character printer accommodates the data logging market, the CT-1 was designed for numeric printing of 24 symbols. In addition to gaining a slightly longer printed line, elimination of the alphabetical portions of the print drum reduced the type font mass sufficiently to permit operation at 100 characters per second.

It will be noted from the accompanying drawing that the CT-1 type font consists of 3 print drum sections, each containing but 3 type-font bands, to accommodate printing of the 24 symbols in the 22 character lines. To understand the columnar printer's operation it should be emphasized that 3 bits of an incoming code are always used to specify one of eight rotational positions for the three integral drums. Two additional bits of the incoming code specify a "normal translation code" (i.e. the code which translates the drum-set along its splined shaft).

Refer now to the drawing of the print drum with its yoke and assume that the drum is in its zero position as pictured. If printing of the character 9 were to be performed in column "0," the rotation code would advance the drum one position from the indicated zero position, and the normal translation code would position the drum one position to the right of its stop. A column zero print hammer would then be actuated. If the same symbol were to be printed in column 1, one would be added to the normal translation code to position the drum in translation 2 positions to the right of its stop. The rotation code would remain unmodified. After it had been positioned, the column one-print hammer would be actuated during the interval while the drum remained stationary. Suppose the same symbol "9" were to be printed in column 6. In this example, six would be added to the normal translational code 1. The resultant sum would position the print drum in translation to its extreme right, at which position the column 6 hammer would be actuated. By comparison, in place of the symbol 9, suppose the symbol V were to be printed in column 6. Since the normal translation code for V is 2, the 2 plus six would overflow the 3-bit register associated with specifying the translational position of the drum, leaving the count at 0. The zero translational position correctly positions the symbol "V" of the second type drum opposite the column 6 print hammer. Similar examples will show that printing may proceed uniformly across the full line without forfeiting any intermediate column positions.

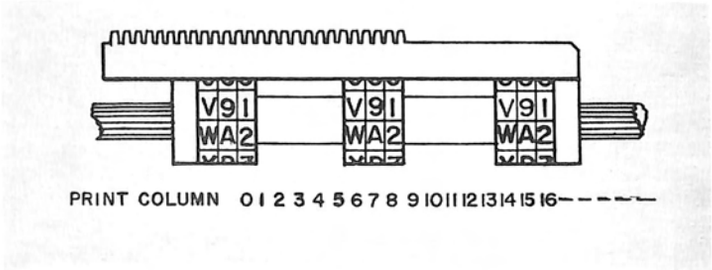

PRINT DRUM AND POSITIONING YOKE

It should be noted that although increased inertia would require a reduction in operating speed, only one available print column is lost for each additional 8-symbol band of type which might be added to the font drums. Thus, if each drum contained 8 bands of type, 64 symbols could have been printed in 17 columns at a speed appreciably lower than 100 codes per second.

SERIAL COLUMNAR PRINTER

During logging of instrumentation data, data always will be supplied to the printer as fast as the printer can take it. In addition, a full line will always be printed. For such operation a simple print hammer action is achieved through use of a series of hammers actuated by a helix of cams affixed to a "hammer drum." The hammer drum is driven in synchronism with the printer's main shaft, through a clutch and appropriate gearing. The hammer drum rotates one revolution for each line printed. After printing of one full line, the drum has rotated until the print cam associated with printing in column "0" is very nearly positioned to execute a printing cycle. Thus, printing of the succeeding line may commence immediately without additional provisions for carriage-return.

The printer is equipped with a paper supply plus a pair of line-feed pinch-rollers skewed at a slight angle with respect to the hammer drum's shaft. During each line of printing, the pinch rollers gradually advance the paper one line-feed. The type font symbols on the print drum are also skewed to correct for the paper misalignment and produce copy which maintains both proper horizontal and vertical registration. The design permits a portion of the last line printed to be just visible. Optionally, printed copy is picked up by a spooler. Although the mechanism illustrated here uses an inked ribbon, the more expensive pressure sensitive paper may be used when desired.

CT-1 SPECIFICATIONS

Speed	100 characters per second.
Print Size	10 characters per inch — office typewriter size Pica for alphabetical symbols.
Type Change	Type drums may be changed to permit coding or symbol changes.
Power Requirements	1/6 HP 115 volt, 60 cycle, induction drive motor.
Environmental Operation	Particular emphasis has been placed on adherence to MIL-E-16400 and MIL-I-26600.
Electrical Characteristics	Identical magnets to those employed in the PT-1, with drives and timing as specified on pages 10 to 15 are required.
Initiate Printing Control	A solenoid operated clutch controls printing of each character or line.

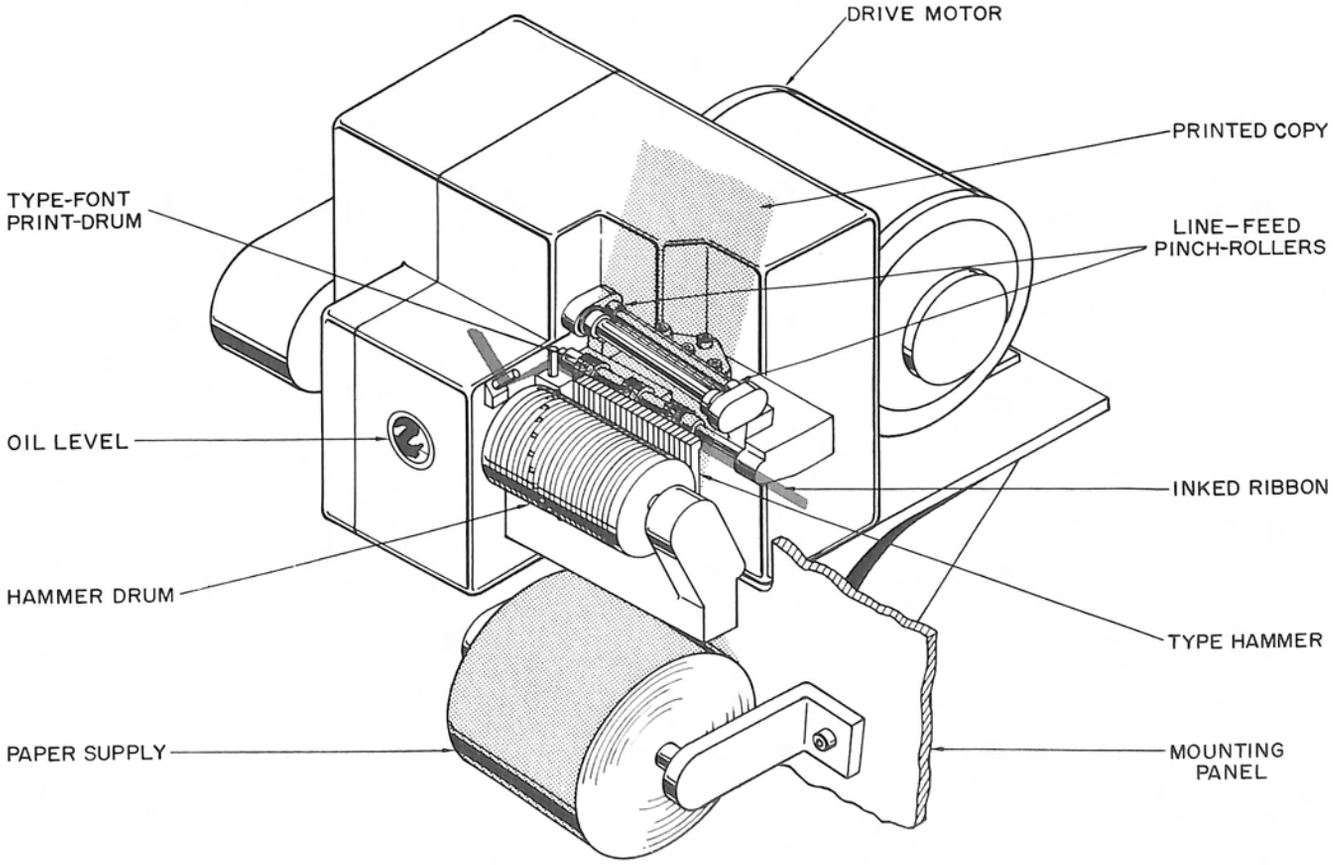

COMPONENT PARTS OF CT-1 COLUMNAR PRINTER

COMPUTERITERS

During recent years, the Soroban Computeriter has proven an extremely reliable input-output device for computers, communications, automation, and other automatic printing applications.

The Computeriters are capable either of being sequenced from coded electrical inputs or of producing coded electrical outputs from manual keyboard entries. Basically the machines consist of modern, rugged, electric typewriters equipped with mechanical coders and/or decoders A printed copy is produced when the typewriter is either sequenced from the coded electrical inputs or manually operated so as to produce coded electrical outputs.

Since efficient integration of electrically sequenced tabulators into specialized data processing and automation systems may involve custom equipments, Computeriter production has been organized to accommodate unique customer requirements. Upon request, Computeriters can be furnished with specific coding, type style, carriage length, special typewriter function control contacts, etc. All such custom features are available in the present three basic types of Computeriters manufactured by Soroban.

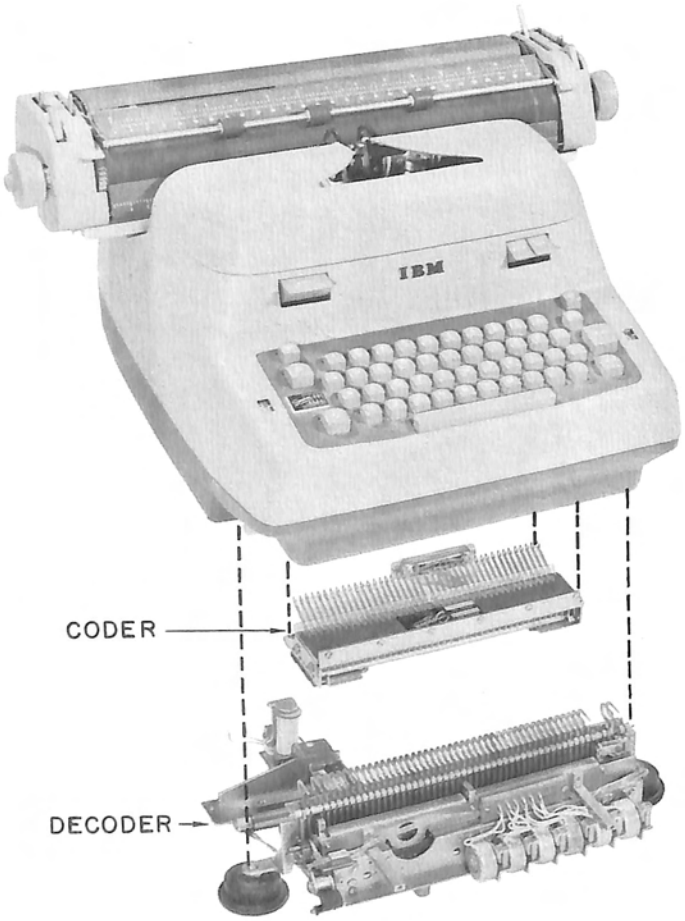

ETC COMPUTERITER

TABULATING COMPUTERITER (Model ET)—The Model ET Computeriter is designed to tabulate data from coded input signals. The Computeriter's mechanical decoder is designed for reliable automatic sequencing of all typewriter function and type key levers from appropriately coded electrical input signals at a rate of approximately 10 characters per second. Removal of an installed decoder is accomplished by removal of the typewriter's feet and two screws, thereby facilitating typewriter maintenance by normal typewriter service personnel. The Computeriter's decoder makes extensive use of ball bearings, nylon bushings, appropriately hardened and plated precision parts, etc., all of which insure long life and trouble-free operation.

CODING COMPUTERITER (Model EC)—The Model EC Computeriter has been equipped with an unusually reliable mechanical coder capable of producing a single code of up to 8 bits for each typewriter keyboard print key entry. A single auxiliary contact is provided on each of the typewriter function keys. Thus, a coded output is provided for each printed character, while a relay contact closure is produced for each operation of a typewriter function key.

INPUT-OUTPUT COMPUTERITER (Model ETC)—The Model ETC Computeriter contains all of the features of both the ET and EC Computeriters.

THE COMPUTERITER DECODING PROCESS — With the decoder installed in the typewriter, the upper end of each seeker (1 & 4) is positioned to hook over a pin (2) installed in the side of each typewriter key lever (3). Thus, a downward motion of a seeker hook produces a typing action. Decoder power is supplied from a special solenoid actuated cam and appears as a pull on the drive link (6).

View AA illustrates how a typical decoding bar (a) is positioned by energization of the compact pusher type solenoid (b) pushing on the magnet arm (c). There is one solenoid for each bar or operating level. When a code is applied to these solenoids, the selected solenoids push their associated spring loaded code bars to their actuated position. With the selected code bars in their actuated position, one, and only one, continuous slot in the bank of bars is created to allow entry of its associated seeker. All other seekers are inhibited by a tooth (5) on at least one of the code bars. At the time the pusher solenoids are energized, a magnet which imparts motion to the drive link (6) is also energized, pulling the drive link through a toggle (7) drawing the decoder bail (8) away from seekers (1 & 4). Although the spring-loaded seekers (1) attempt to follow the bail's motion, the only seeker which does

follow the bail's motion is that seeker 4) associated with the single open slot in the bank of code bars. Once the seeker has entered the slot, it pivots around the pivot rod (9), continuously following the bail.

Since the geometry of the bail's motion is determined by the rotational motion of the pivoted actuator (10), the bail ultimately commences a downward motion and engages the seeker's (4) notch, drawing the selected seeker (4) downward and pulling the typewriter key lever (3) down as illustrated. All other seekers (1) are blocked by the teeth (5) on the code bars and are free of the bail (8) when downward motion commences. At the end of its downward stroke, the pull on the drive link (6) is released and heavy duty springs restore all components to their initial condition. In the initial condition, the bail has lifted seekers (1 & 4) away from the teeth of the code bars, thus solenoids may position the decoding bars with a minimum of friction and interference.

THE CODING PROCESS — With the Coder installed in the typewriter, the yoke of the code slectors encompass pins projecting from the side of the typewriter cams. Manual depression of a key trips the cam which then pulls the selector, engaging the selected bails' edges with the notched teeth, thus imparting a rocking motion to the bails. A tab which projects from the end of each bail drives the contact pushers against the opposing force of the bail return springs. The contact pushers actuate the selected contacts, generating the desired parallel output code. When the cam returns to its normal position, the code selector is returned to its initial position and the springs push their associated bails back to their initial positions, releasing the set code. When a common contact is used, the common contact is adjusted to make after and break before the code contacts.

MECHANICS OF DECODER

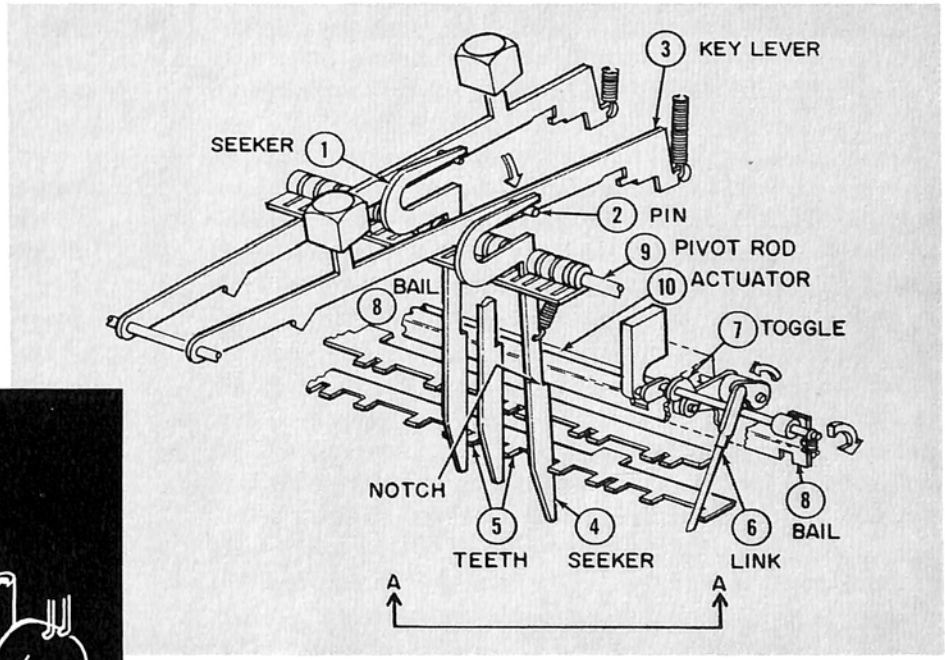

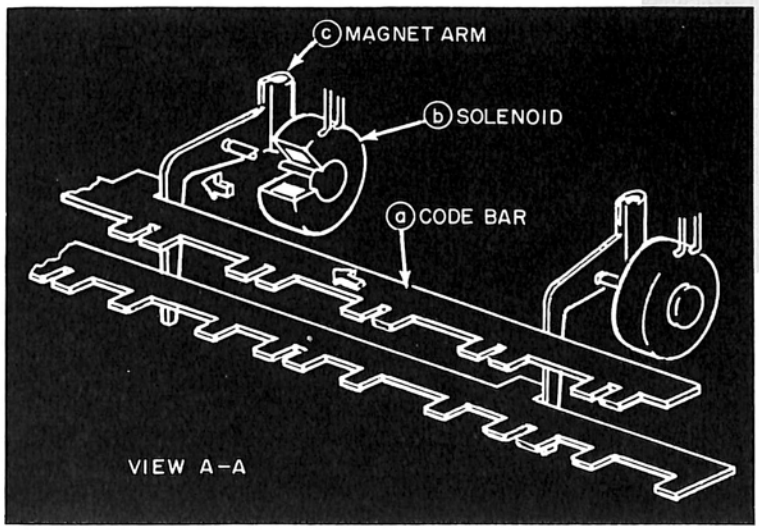

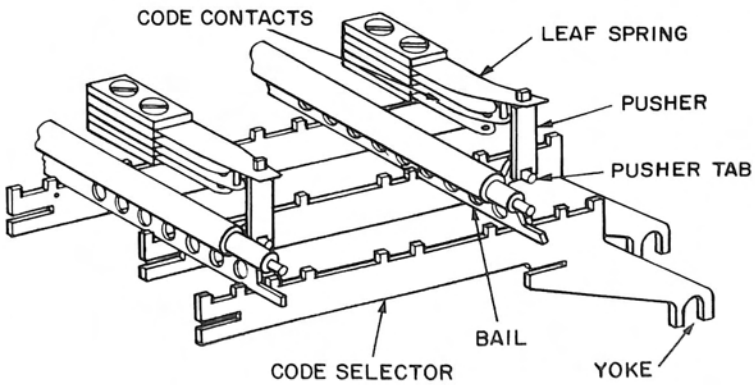

MECHANICS OF CODER

COMPUTERITER CIRCUIT DESIGN—In discussions of the Computeriter, the terms "translator" and "decoder" are used synonymously. They refer to that device which is used to sequence the typewriter from appropriate electrical input signals. By comparison, the coder is that assembly which produces coded electrical outputs from manual entries into the typewriter's print keys. Electrical design parameters for circuits operating with both the translator (or decoder) and the coder are contained in the component descriptions which follow. When designing circuits for use with the translator, the following magnets and switch contacts are used:

A) *Translator Cam Magnet (TCM)* — Actuation of the Translator Cam Magnet (TCM) trips the translator power-cam to couple a driving force from the power-roller to the translator. The drive force is adequate to mechanically sequence the translator which in turn sequences the typewriter. The power-cam sequences the translator but once each time power is applied to the magnet, TCM. Reset of the cam requires that power be removed from TCM once each cycle. The power-cam is contoured so as to gradually apply driving forces to the translator without impact loading. Such contouring produces a drive force delay of a few milliseconds after TCM trips the power-cam. Although the translator code magnets (TMs) and translator cam magnet (TCM) are of comparable operating speeds, the delay permits the code bars to be fully positioned before translator sequencing commences if the TMs are driven earlier than, or concurrently with, TCM. For reliable operation the translator cam magnet TCM should be energized for at least 25 milliseconds (i.e. at least until the translator bail switch, TBS, operates). For proper reset of the power-cam, TCM should be off for at least 20 milliseconds before the start of a new cycle. Since inertia is involved in the power-cam's reset, full diode suppression of TCM will result in unreliable operation. TCM should be suppressed with a resistor-diode wherein the suppression resistor is no smaller than twice the DC resistance of TCM.

B) *Translator Code Magnets (TM)*—The TMs position the translator's notched decoding bars. For reliable operation, the TMs should be energized no later than the translator cam magnet (TCM). When subjected to elevated temperatures for extended periods, the TMs' bearings may become sticky so as to produce unreliable code bar reset. Although the magnets will withstand 7 watts of continuous dissipation, if the dissipation is held to 3 watts average, or less, they may be sequenced through at least 20 million cycles before becoming sticky enough to require cleaning. Thus, power dissipation of the magnets should be held to the minimum value consistent with reliable operation. Reliable operation is obtained if power is held on the TMs at least until the closure of the translator bail switch, provided however, that full diode suppression is used across the magnets, TM. If convenient external timing is available, more optimum timing results from removal of drive from the translator code magnets 50 milliseconds after initiation of the Computeriter cycle. Such 50 millisecond timing is available when Computeriters are sequenced from 9½ character per second motor-driven tape readers.

C) *Translator Bail Switch*—The Translator Bail Switch (TBS) operates as soon as translator sequencing commences. TBS remains operated for approximately 45 milliseconds until the 70 millisecond point of the 105 millisecond cycle. Common practice makes use of a 35 millisecond external delay circuit, triggered from the trailing edge of TBS, to establish the end of the print cycle as well as the time for initiation of the succeeding print cycle.

D) *Delay Function Contacts* — Certain typewriter functions require more time than one typewriter print cycle. Delay functions include "carriage return" and "tabulate." Although "back-space" requires slightly more time than a normal print operation, the completion of the function may overlap the beginning of a succeeding cycle (including a succeeding back-space). Contacts are provided on the Computeriters to operate for the duration of the tabulate and carriage-return functions. The contacts permit associated controls to be inhibited while the typewriter is engaged in these operations. In the Model ETC Computeriters, two tabulate contacts are required (one for coder circuitry, the other for the translator circuitry). For convenience of installation, one contact is operated from the lever that trips the tabulate function (TAB lever contact), while the other operates from the TAB's cam (TAB cam contact). Since the TAB lever contact lasts slightly longer than the TAB cam contact, its output is always used in the translator's inhibiting control circuits.

E) *Margin Stop Safety Contact*—A margin stop safety contact is provided both to inhibit actuation of TCM if the typewriter carriage is against its right margin stop, as well as to provide a warning signal. When the carriage is against the right stop, the typewriter bail locks the keyboard. To prevent translator damage, the safety contact must inhibit further sequencing of the translator for codes other than carriage return. Power is usually routed to TCM through the pole of the margin-stop transfer-contact so that operation of TCM is inhibited and a trouble indication is signalled. Special controls then may direct the translator to actuate a carriage return.

F) *Special Contacts* — Other special contacts can be provided to accommodate unique customer requirements.

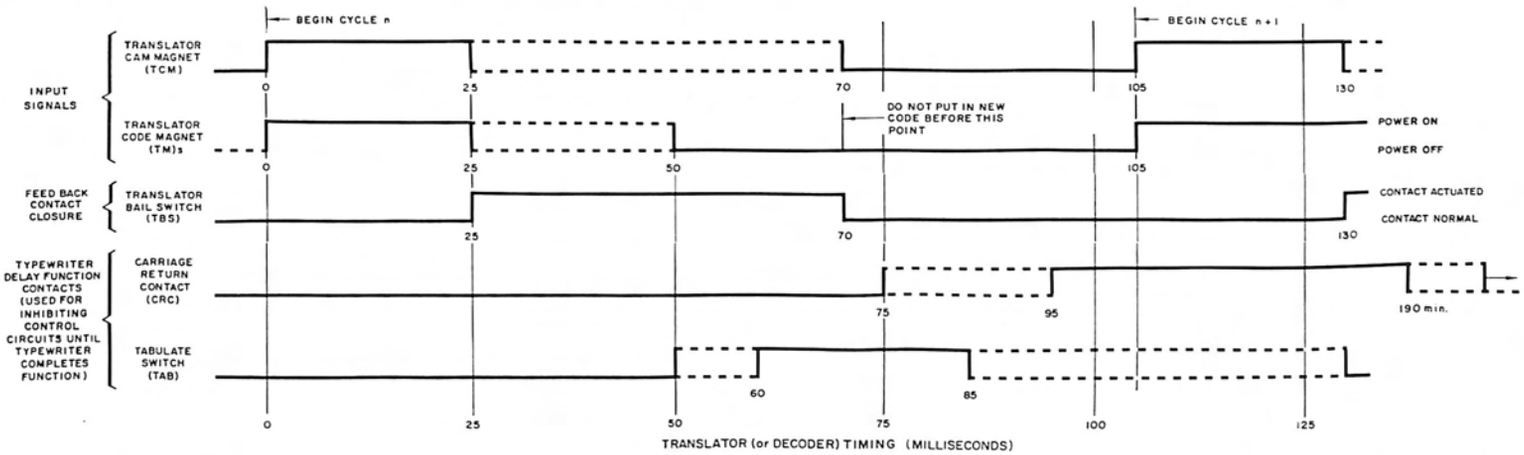

When designing circuits to use the Computeriter's coder, it is convenient to reference both coder contact and function switch operate times with respect to a translator's controlling drive signals. The accompanying curves are so plotted. Contacts and switches which are used when the Computeriter's keyboard is used as an input keyboard to an electronic system include:

a) *Code Contacts (TC)* — Up to 7 code contacts are provided to produce unique 7 bit parallel coded outputs for each typewriter print key operation. The contacts are driven from the type cams each time a print hammer approaches the platen.

b) *Coder Common Contact (TCC)* — The coder's common contact is operated by the same linkages that drive the TC, or code contacts. As with the code contacts (TC), TCC is only operated by typewriter print keys. TCC is adjusted to close after the TC contacts close, and reopen before they reopen.

c) *Function Contacts* — Since the coder does not produce an output code when the space, shift, tab, carriage-return, or back-space key levers are operated, a single separate contact is provided for each of these functions. With the exception of shift, all provide a single contact closure with timing as indicated on the enclosed curves.

d) *Shift Contacts* — Two contacts are provided. The upper-case shift-lever transfer-contact (shift-lever contact) closes in one direction when the carriage is in upper case, and transfers when the carriage returns to lower case. The "shift contact" operates, with timing and duration as indicated on the curve, whenever the shift function is being performed. The output of the shift contact is generally routed to the pole of the shift-lever contact. The shift-lever contact then distributes the shift pulse to produce either an upper-case or a lower-case shift pulse.

e) *Auxiliary Coder Contacts* — As a custom feature, a limited number of auxiliary contacts can be provided to produce a single contact closure for each cycle of an associated print key. These contacts provide a single circuit output in addition to the available coded outputs.

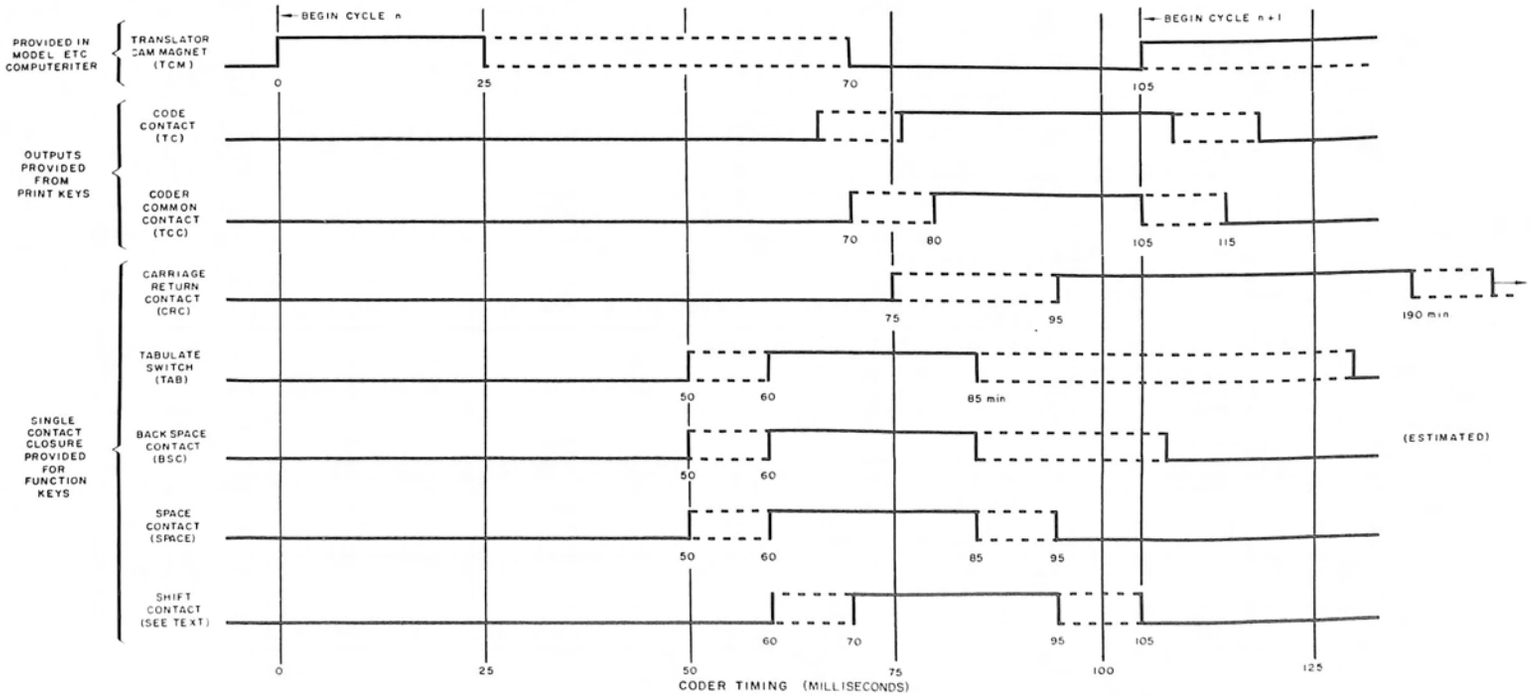

STANDARD CARRIAGE WIDTHS

(Note: Basic Computeriter price applies to 12" standard carriage)

CARRIAGE WIDTH	LENGTH OF WRITING LINE	WIDTH OF PAPER ACCOMMODATED
12"	10.4"	11"
16"	14.4"	15"
20"	18.4"	19"
24"	22.4"	23"
30"	28.4"	29"

STANDARD REGISTER PIN FEED PLATENS

(Available at additional cost)

	OVERALL FORM WIDTH	HOLE-TO-HOLE	WRITING LINE
12" Carriage (Models 1, 2, 4, 5)	5¾"	5¼"	4¾"
	6½"	6"	5½"
	8"	7½"	7"
	8½"	8"	7½"
	9⅞"	9⅜"	8⅞"
16" Carriage (Models 1, 2, 4, 5)	9⅞"	9⅜"	8⅞"
	10⅜"	9⅞"	9⅜"
	10⅝"	10⅛"	9⅝"
	11¾"	11¼"	10¾"
	13⅝"	13⅛"	12⅝"
20" Carriage (Models 1, 2, 4, 5)	13⅝"	13⅛"	12⅝"
	14⅞"	14⅜"	13⅞"
	16"	15½"	15"
	16¾"	16¼"	15¾"
	17-27/32"	17-11/32"	16-27/32"
12" Carriage (Models 6, 7)	5¾"	5¼"	4¾"
	6½"	6"	5½"
	8"	7½"	7"
	8½"	8"	7½"
16" Carriage (Models 6, 7)	9⅞"	9⅜"	8⅞"
	10⅜"	9⅞"	9⅜"
	10⅝"	10⅛"	9⅝"
	10¾"	11¼"	10¾"
	13⅝"	13⅛"	12⅝"

Pin Feed Platens for 24" and 30" carriages, SPECIAL ORDER.

SPECIFICATIONS
MODEL ET, EC AND ETC COMPUTERITERS

Speed of Operation — 10 characters per second, max.

Input Codes — Customer specified 6, 7, or 8 bit codes can be accommodated.

Output Codes — Customer specified 6 and 7 bit codes can be accommodated. On custom order, 8 bit codes can be accommodated.

Noise Level — Noise no greater than that produced during manual operation of the typing mechanism.

Typewriter Characteristics — 42 key and 44 key, 115 volt, 60 cycle, Model B IBM typewriter.

Color Shift — On custom order, color shift can be provided. On 42 key typewriters, two separate codes specify each of the two ribbon colors. An auxiliary solenoid is required on 44 key typewriters to control color shift.

Power Supply Requirement — 12, 24, 48 or 90 volt DC decoder solenoids are available. Maximum power consumption of each translator magnet is 7 watts, while the translator cam magnet consumes 3½ watts. No auxiliary power is required for coder.

Weight — 50 lbs. (Approximately).

Finish — Dove grey wrinkle unless otherwise specified.

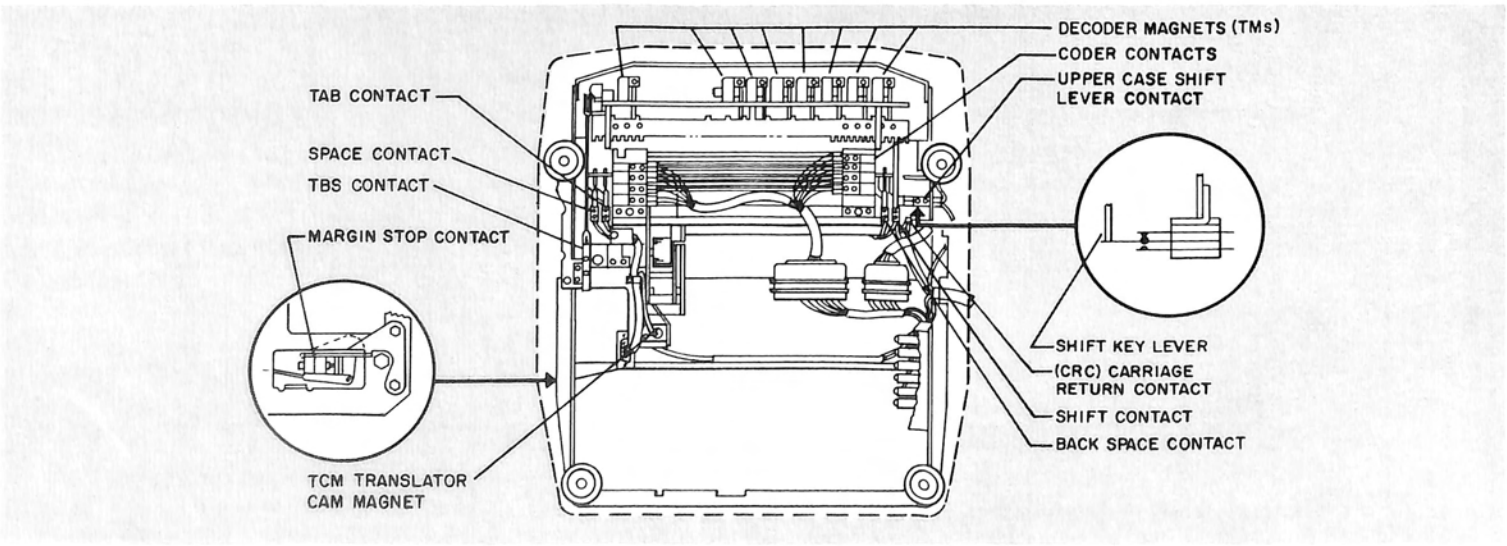

UNDERSIDE OF ETC COMPUTERITER

See Computeriter Ordering Questionnaire, Page 69

FK-2 CODING KEYBOARDS

The series FK Keyboards were designed to accommodate that custom market which requires a rugged, reliable, coding keyboard with a good operator touch. Since operator fatigue must be minimized to obtain true reliability, particular emphasis is placed on retention of uniform key pressures across the entire keyboard with key pressures comparable to those encountered in electric typewriters. To reduce key entry errors, a live keyboard touch is provided. Achieving such basic objectives while retaining both reasonable distances for key strokes as well as high electrical contact pressures required a keyboard design wherein all working parts were positioned by a simple servo drive.

The series FK Keyboards are both mechanically and electrically interlocked. One and only one key may be depressed at a given time. Once depressed, all keys are locked in their respective positions until a control signal is provided to release the keyboard. The keyboard release signifies consumption of the selected code by the controlled mechanism. Either an internal time constant, or a feedback pulse from the controlled device is used to establish the duration of the keyboard's output signal as well as to prevent multiple electrical outputs from a single key depression.

A mechanical matrix is used to produce digit coding, with a maximum of eight parallel bits per code, plus common, provided by standard units (custom units can provide a maximum of 16 bits per code). Keyboards can be supplied with almost any key-button arrangement with a maximum of up to 64 keys. The simple compact design makes use of high quality components including bifurcated contact leaves operated with a wiping contact action, palladium and Paliney 7 contacts, hardened parts, precision mechanical locking mechanisms, etc.

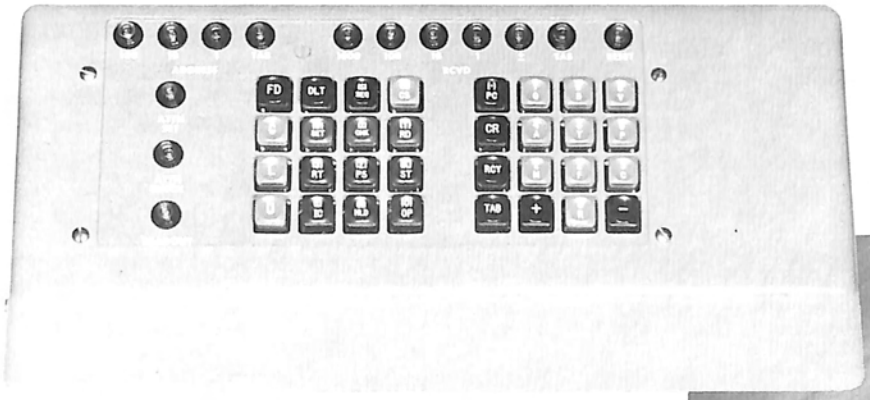

FK-2M KEYBOARD WITH SPLIT KEYBUTTON FIELD

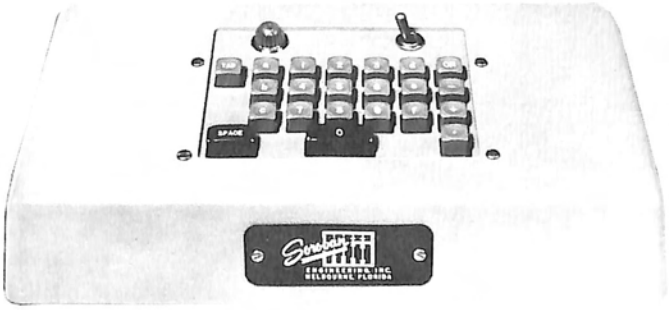

FK-2M KEYBOARD - NUMERIC

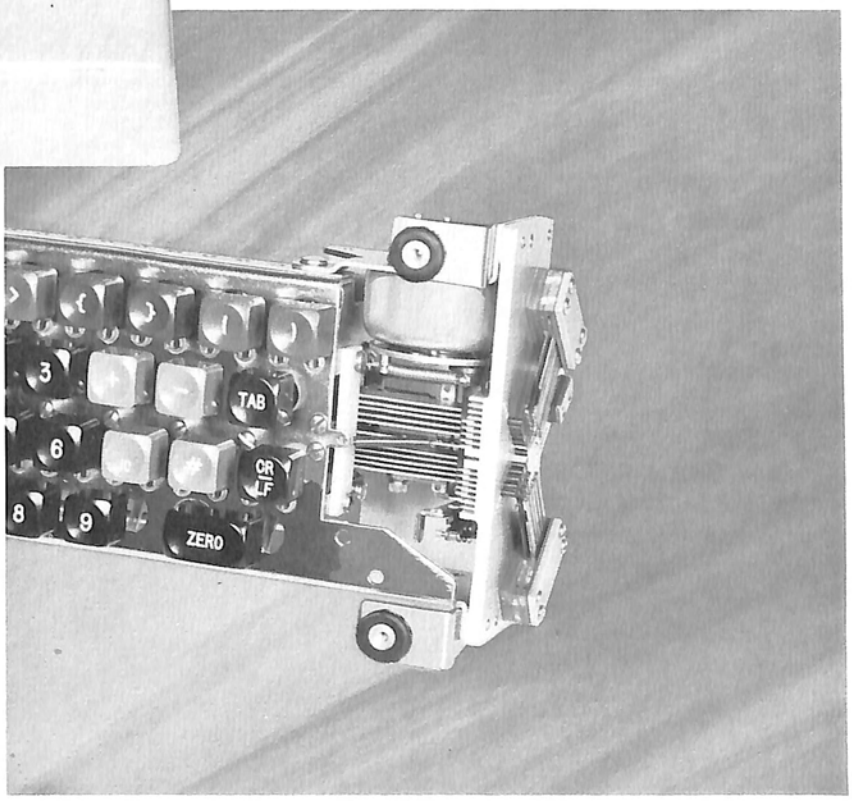

FK-2L KEYBOARD

HOW THE CODE IS FORMED—The sequence of operations which produces a coded output from the FK Keyboards may be described as follows:

a) As an operator depresses a key, an affixed actuator enters coded slots in the code bars, locking all bars except those pertaining to the selected code. During this same operation, the actuator displaces the interlock bar to the right causing it to operate the solenoid switch.

b) A compact rotary solenoid is actuated by closure of the solenoid contact. The solenoid drive rotates the code-bar bail clockwise on the reset bail shaft. The rotary motion moves the spring hanger shaft away from the blocked spring loaded code bars. Since the bars which contain wide slots are not blocked by a depressed actuator, they move towards the right to actuate their respective code contacts. During this operation, the spring hanger shaft also locks the interlock bar in its actuated position. Locking the interlock bar holds the key in its fully depressed position.

c) The free-moving code (or permutation) bars, having engaged corresponding coding contacts, close electrical circuits to produce the equivalent electrical pulse code.

d) During the last motion of the solenoid energize stroke, after the code bars have operated their respective contacts, a common or sync contact is operated.

e) All of the preceding conditions are maintained until the anti-repeat relay (ARR) receives a control signal from either an internal time delay circuit or the driven unit. When ARR picks up, the keyboard solenoid is released and all components except ARR are permitted to return to their normal unenergized condition. Since ARR is held on the interlock bar's solenoid switch-contact, further electrical outputs are inhibited until the key is released and its actuator rises.

f) The caged row of ball bearings prevents depression of more than one keyboard actuator at the beginning of the keyboard cycle.

CONTROL CIRCUITS FOR KEYBOARD — Soroban recommends use of "positive action" interlocked circuitry in preference to circuitry which permits the keyboard to produce output pulses of fixed

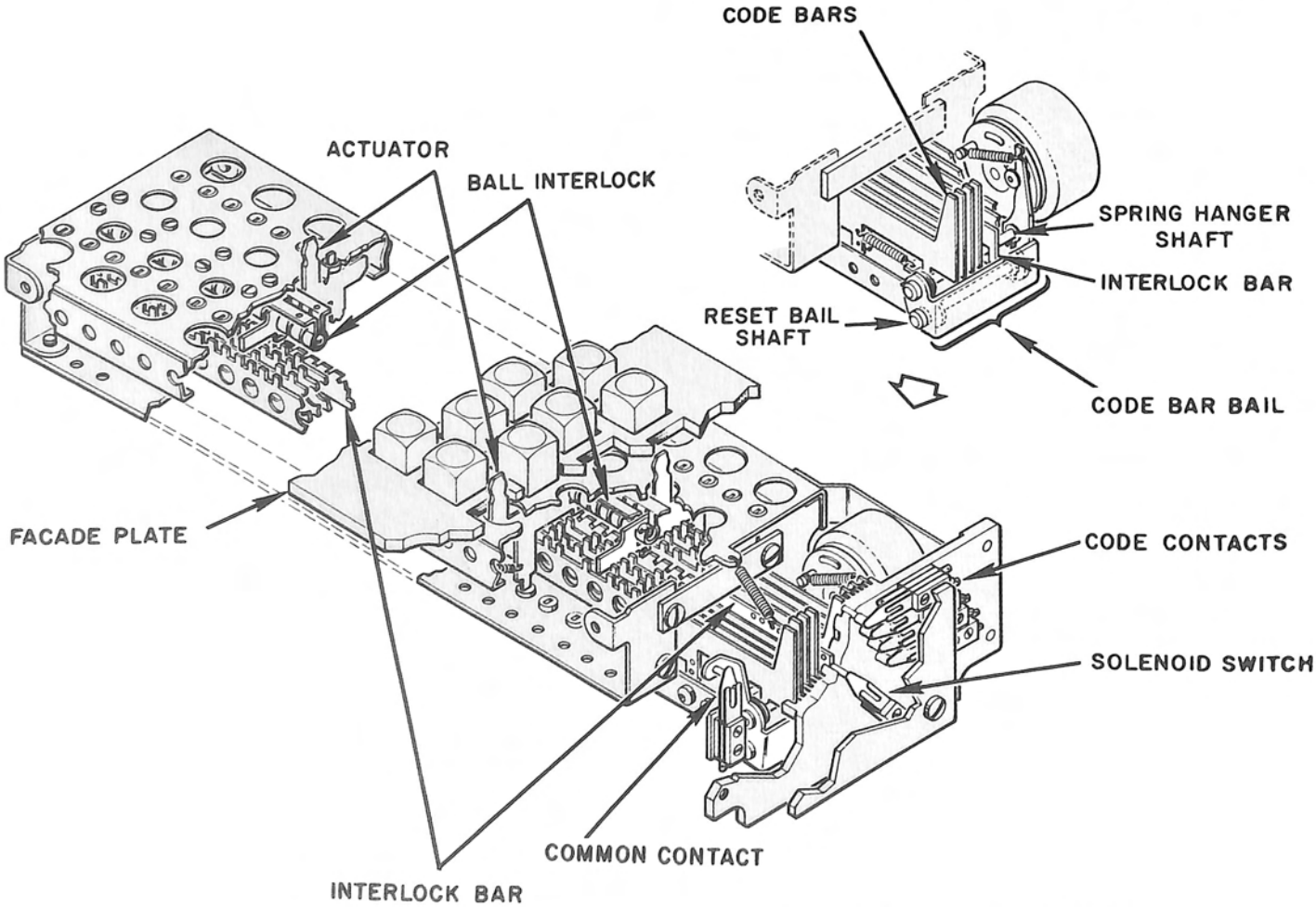

MECHANICS OF FK-2 KEYBOARD

duration. Not only is electrical reliability enhanced, but interlocked circuitry also permits the operator to sense improper operation through variations in the keyboard touch.

The accompanying schematic is presented to illustrate the FK-2 keyboard's operation. It should be remembered that while designing electronic circuits for use with electrical contact devices, contact closures will never establish clean electrical circuits completely free of chatter. The very mechanism of wiping during contact overtravel, a mode of operation by which contacts are permitted to clean themselves so as to improve reliability, must produce contact hash. Although the slow response times of relays generally filter out such contact noises, integration of electronic control circuits with contact devices does require consideration of the ever existing contact noise problem.

The accompanying schematic illustrates a "positive-action" interlocked feedback circuit. In the example, the external control signal is entered through pin B, with the jumper to pin C deleted. When a key is depressed, the solenoid switch operates to energize the keyboard solenoid through relay contact K2-A. The selected code appears at the code contacts before the keyboard common contact (KCC) first operates. Relay K1 is energized by KCC through relay contact K2-B. To minimize the effects of contact bounce, the sync signal may be taken from relay contact K1-C. Thus bounce on the code contacts will be over by the time K1 has picked up.

As soon as the driven device returns a code-complete signal by closing the circuit to pin B, anti-repeat relay K2 energizes. Operation of K2 opens contact K2-B to de-energize relay K1. With contacts K2-A transferred and contact K1-B open, the keyboard solenoid is de-energized and the keyboard locking mechanism is released. However, K2 will not drop off until the operator releases the key button. If the operator had released the key button before receipt of the control signal, the keyboard locking mechanism would have retained the key in the fully depressed position until receipt of the feedback control signal.

If the keyboard were used for generation of a pulse of fixed duration, the jumper from pin B to C would be inserted. As before, when relay K1 is energized to produce the common or sync signal it also produces the keyboard feedback control signal from contact K1-A. The duration of the output code may be controlled by varying the drop-out time of K1. As R3 is decreased in value, relay K1's drop-out time is increased. Adjustment of R3 permits the keyboard to produce output pulses variable from 10 to approximately 30 milliseconds.

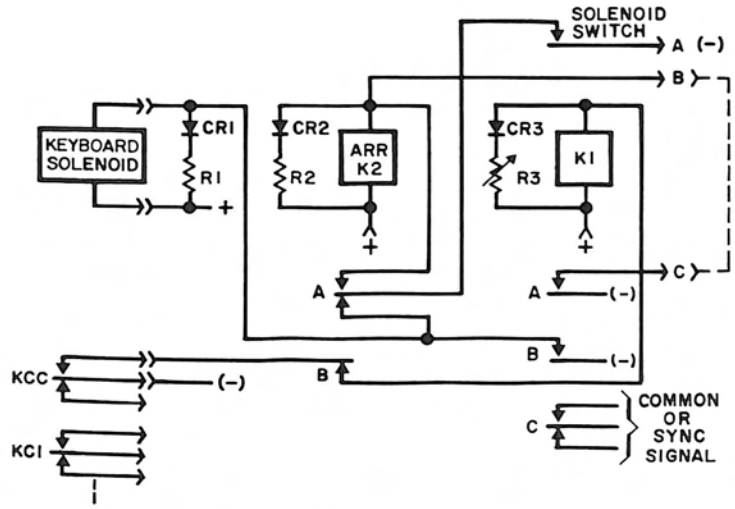

KEYBOARD CONTROL CIRCUIT

FK-2 SPECIFICATIONS

Coding	8 bits plus common; mechanically produced (up to 16 bits on custom order).
Speed	Limited only by driven apparatus, or operator. Few operators exceed 10 entries per second.
Key Pressure	Approximately 6 ounces (can be varied to order).
Coding Contacts KC	Bifurcated leaves, form A, palladium or Paliney 7 contacts, 30 grams minimum force. (Form C contacts can be provided on special order.)
Common Contacts KCC	Bifurcated leaves using palladium contacts, form A or C.
Coding Pulse Duration	Under control of driven apparatus. If fixed width, 10 ms nominal.
Contact Bounce	Duration of 3 ms, completed within 10 ms of initial contact closure.
Keyboard Size	FK-2S (21 keys or less) FK-2M (22-44 keys) FK-2L (45-64 keys)
Total Output Load	Unsuppressed, 100 watts AC, but not more than 2 amperes with non-inductive load on any contact.
Drive Solenoid	Operable from a specified voltage between 6 VDC and 100 VDC, unfiltered 40 watts. A 15 ms 40 watt pulse, with 20 watts of holding power required thereafter, is consumed for each key entry. For FK-2S Keyboards which produce no more than 6 bit codes through form A contacts, the power requirements drop from the specified 40 watt pulse to a continuous 20 watt pulse of duration equal to the interval of keyboard operation.
Available Configuration	Up to 64 keys, including space bar.
Key Button Colors	Grey, dark red, green, black, yellow, brown, dark blue, orange, ivory.
Key Bar Colors	Grey, black.
Finish	Soroban light-grey enamel or special finish on request.
Weight	Approximately 4 to 10 lbs., depending on size.

See Keyboard Ordering Questionnaire, Page 71

FRA HIGH-SPEED READERS

A universal contactless tape reader capable of accurately reading all existing punched tapes at high reading speeds is not only feasible, now it is an available reality. Chadless tapes, containing either embossed or punched sprocket holes; dry or lubricated papers; transparent or opaque paper or plastics; varying in thickness from .001 inches to lapped splices of .004 inch tape, all can be read by the new and improved Soroban Model FRA readers. These readers satisfy the demand for a high-speed tape reader of simple design and extreme reliability capable of operation in severe industrial and military environments. The ability to read at speeds up to 300 characters per second, stopping on each and every character; coupled with the ability to read forward or reverse at full speed, adapts the unit to applications previously impossible.

Anemometer perforation sensing elements permit thousands of hours of operation, free of either mechanical adjustment of the reading head or electrical adjustment of their associated amplifiers. Devices which use anemometer sensing of punched tape have proven to be rugged, durable, accurate; not to mention reliable. The undesirable features encountered in photoelectric reading have been overcome. Optical transparency of tapes, dust accumulation on and around the sensing station, ambient light conditions, and lamp life no longer afford a problem. Reliable reading of tapes at speeds varying from static to 2000 codes per second or faster, is easily achieved with anemometer tape sensing.

In the Anemometer Reader, tape is passed over a reading station containing a file of apertures in correspondence with the hole pattern of the tape to be sensed. A positive pressure air supply is delivered to the apertures. As the tape is transported across the file of apertures, the tape acts as a valve, porting air whenever a perforation is present and blocking air flow whenever the tape is continuous. Each aperture is bridged by a hot-wire element, each such element being wired as one leg of an electrical bridge circuit. Individual feedback amplifiers associated with each bridge maintain the bridge in balance. Air flow which would normally tend to cool the element and cause bridge unbalance, produces an error signal which permits the feedback amplifier to adjust the bridge drive so as to restore balance. Thus the element is maintained at constant resistance, hence constant temperature. The voltage across each bridge indicates when the tape has ported air over its associated anemometer element. Simple transistor amplifiers provide reliable and stable return-to-zero reading of tapes at almost any practical tape transport speed. Static tape reading is also provided since AC carrier feedback amplifiers are employed. Tape opacity or transparency is of no consequence since operation of the system is based on air flow through the tape.

It should be mentioned that in wind-tunnel instrumentation, the constant temperature principle is applied to elements which have an inherent thermal time constant of a millisecond or more, to produce anemometers capable of observing phenomena to 100 kc. Obviously such amplifiers permit sensing of perforations at rates faster than punched media can be efficiently transported.

The construction of the Soroban Model FRA Anemometer Readers is pictured in the accompanying line drawing. It should be noted that the readers incorporate the tried and proven tape-feed assembly of the Model GP-2 Tape Perforator pictured and described on page 2 of this catalog. Field experience has verified a mean-time-between-failures for the GP-2 feed mechanism in excess of 3000 hours of continuous operation. When used in a tape reader, stationary tape is positioned over the sensing elements for 2/3 of each reading cycle. Tape is advanced one character during the remainder of the cycle to provide character-by-character reading.

The air injector for the reader is pictured in the line drawings, both installed in the main reader, and in a separate sectional drawing. Referring to the section, air is delivered to the nozzle at approximately 7 psi (1 to 1½ c.f.m.). The diffuser provides for approximately 10:1 entrapment of air, with entrapped air provided through the radial valve ports. The resulting pressure regulated air is delivered to the "injector front" at a pressure of approximately 2½ inches of water. The regulated air is routed to the sensing head, with elements mounted as indicated in the exploded section. Air pumps similar to those used for vacuum chad disposal in the LP-2 and PT-1 Perforators described on pages 6 through 15 are used with the FRA readers. Although not obvious from the drawings, the diffuser body is rotated from the position indicated in both the section and line drawing, whenever the reader's tape depressor is positioned for tape loading. The rotation causes the valve ports to close. High pressure input air is thereby applied directly to the sensing head to blast lint and dirt from the vicinity of the reading station with each tape loading.

During transport, tape will occasionally flip minute

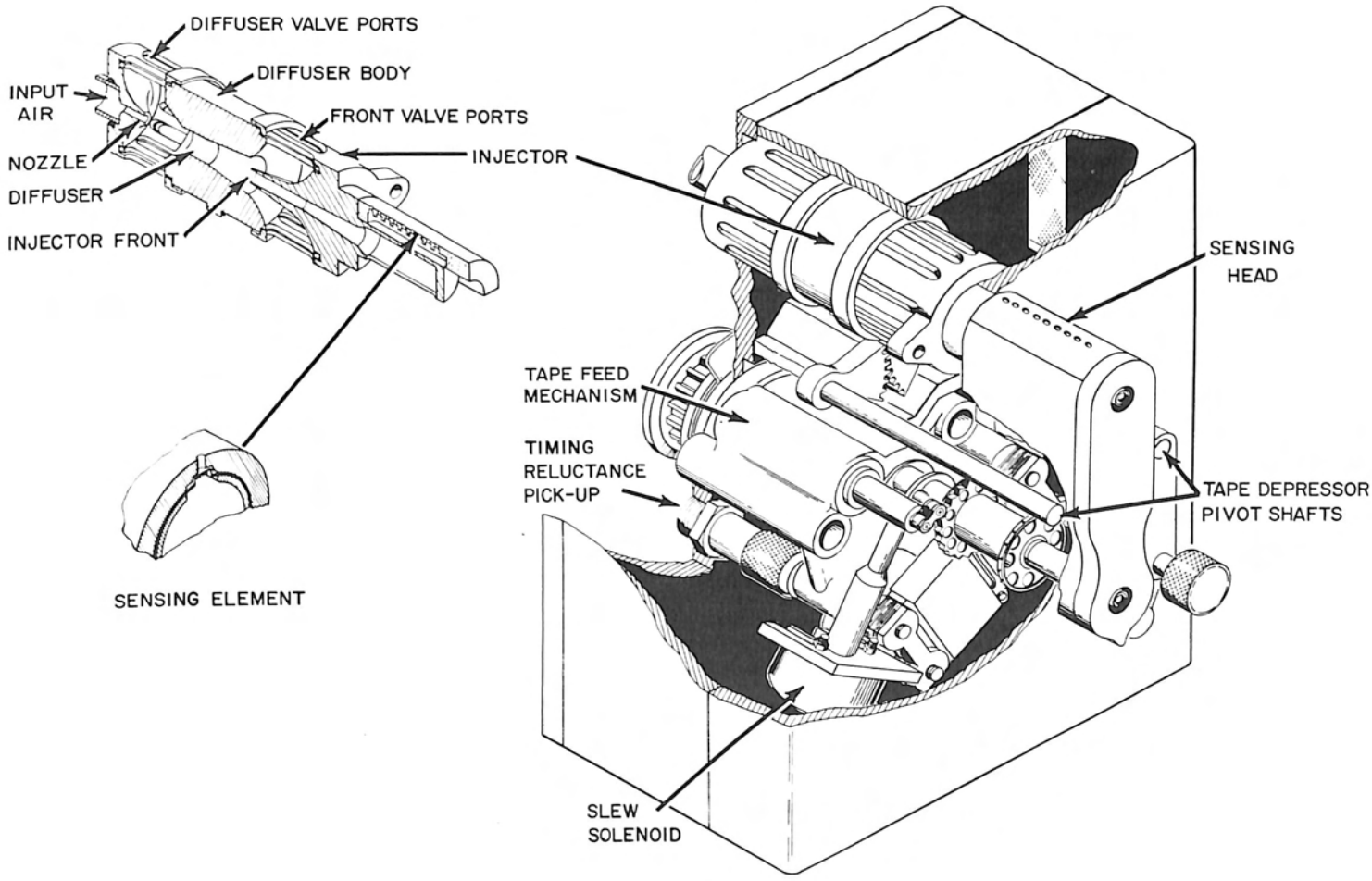

MECHANICS OF MODEL FRA HIGH-SPEED TAPE READER

specks of lint upstream, onto the hot-wire elements, against the normal cleaning-flow of sensing-air. Unless air blast cleaning is provided, the accumulation of such lint could introduce reading errors after approximately 200 hours of continuous reading of common paper tapes.

CIRCUIT DESIGN CONSIDERATIONS: The reading elements of the Model FRA Readers consist of 8 turn coils of nickel-iron alloy anemometer wire. Although the elements have a usable temperature range of up to 1100°F, in the read heads, the operating temperature is restricted to 575° to 600°F to insure an element life measured in thousands of hours of operation. An anemometer reader element measures approximately 7 ohms at room temperature and 18 ohms at operating temperature. WARNING: The heavy current supplied by multimeters on the low ohms scale will effect measurements of element resistance at room temperature, and in some instances cause element burn-out. Do not pass more than 10 ma through coils while checking for continuity.

Each of the Soroban reader amplifier packages provides one stage of voltage amplification and a Class "B" push-pull output stage which drives the sensing element. The resistance bridge and its amplifier are AC coupled and operated with a 15 kc carrier in a circuit which consumes less than 2½ watts per element and amplifier. When the sensing element is in still air (no - hole condition), 10 volts peak - to - peak is required to establish bridge balance. The presence of a perforation increases the bridge drive to 18 volts. Between the hole and no-hole reading condition, the amplifier voltage gain of 250 is sufficient to limit the element resistance variations to one per cent. The

amplifiers are capable of non-return-to-zero reading at rates of 1000 codes per second.

A voltage level detector provides a no-hole output of ground potential, and a —28 volt output from a 2.7 K source, whenever a hole is present. To permit strobing of signals produced during sensing of tape perforations, application of —10 volt signals to a gate input enables the amplifier outputs for the duration of the strobing signal. The input gates of all read amplifiers are routed to the chassis output connector via a common bus.

The output signals from the feed synchronization pickup, when gated with the control signals which request a tape reading, produce a sharply defined sprocket strobe signal; a signal functionally equivalent to the best signal that could have been obtained by actually reading a sprocket hole. The generation of the "sprocket strobe" not only permits reading of tapes with embossed sprocket holes, but eliminates the need for actual sensing of a sprocket hole. The sprocket strobe is a pulse of approximately 0.2 ms duration. Jumper terminals are provided on the reader chassis connector to permit the sprocket strobe pulse to gate the reader channel output signals, when desired.

The FRA Reader Panels are equipped with means for reverse transport and reading of tape. For readers operated at the lower speeds (i.e. speeds up to 150 codes per second), the reset-cam can be eliminated from the tape-feed mechanism pictured on page 2. Push-pull feed magnets then permit locked coupling of the sprocket and cam-follower during either the clockwise or counterclockwise pivotal strokes, so as to produce so-called "instant" reversal of tape transport. For readers operated at higher speeds, reverse tape transport requires reverse of the drive motor's rotation.

During a reading cycle, the code positioned over the reading station is read before tape is transported. Similarly, when an FRA reader is signalled to reverse, the punched character then positioned over the sensing elements is first read (and its sprocket strobe delivered) as though a normal forward reading operation were being performed, following which a reverse tape transport backs the tape up one character. If reverse reading were directed upon recognition of a specific code, the "reader-reverse" operation would direct reading of another code after the control code in the forward direction, followed by a one character tape backup. The next character read in the reverse direction would be the code which had initiated the reverse reading. Thereafter, as long as the reader-reverse line is held on, reading will continue character-by-character, under control of the "read-request" line, in the reverse direction with read preceding feed. To read in reverse, the "motor-on," "read-request," and "reader-reverse" must all be on. In the 150 code per second "instant-reversal" FRA-2 reader, the first reverse feed will require 7 ms or less. In the 300 code per second motor reversal Model FRA-1, approximately 5 seconds will be required.

It should be noted that the impedance, voltage, and polarity of the FRA reader signals are completely compatible with the interface requirements of the Soroban Punch Consoles pictured on pages 20 and 21. By providing direct interconnections as follows, reperforation will occur at the operating speed of the slower of the two equipments:

Punch Console Terminal		Reader Console Terminal
Code Lines	⟷	Code Lines
Read Strobe	⟷	Sprocket Strobe
Buffer Ready	⟷	Read Request

MODEL FRA HIGH-SPEED TAPE READER
WITH SENSING HEAD REMOVED

MODEL FRA READER SPECIFICATIONS

The Model FRA Tape Readers are provided on a standard 10½ inch high, 19 inch wide, slide-hardware equipped, relay-rack panel. The panel contains a tape-reading head, associated amplifiers, control circuits, power supplies, drive motors and air pumps. Tape spooling devices available on custom order, must be mounted on adjacent panels.

Reader Rate and Direction	**FRA-1,** for speeds up to 300 cps (nominal ±5%). Reverse tape reading permitted by reversing rotation of drive motor (reversal time, 5 seconds approx.). **FRA-2,** for speeds up to 150 cps (nominal ±5%). Reverse tape reading permitted through push-pull magnet control of feed mechanism. (Reversal time, 7 ms., approx.)
Circuitry	Solid state throughout.
No-Tape Contacts	No-Tape contacts are provided on the panel adjacent to the reader head.
Slewing	A solenoid to control slew is available at additional cost. The solenoid disengages the feed detent, permitting tape to be pulled through the reader in either direction at high speed.
Tape	The FRA readers are available for reading standard fully perforated or chadless 5, 6, 7, or 8 hole tapes, transparent or opaque, of all grades of paper or plastic. Tapes with hole spacing tolerances deteriorated to values approximately twice those specified in EIA RS227 may be read.
Drive Motor	1/3 HP induction, 3450 RPM, 115 VAC, 60 cycles. 10 ampere starting current, 2 ampere running current. Motors for other voltages and frequencies available on custom order.
Weight	55 lbs. approximately, including amplifiers and drive motor.
Accessories	Panel mounted tape handling equipment available on order.
Environment	Particular emphasis was placed on adherence to MIL-E-16400 during the design of the reader and mechanical components. Highest commercial quality circuits are used throughout. The design is such that severe environmental requirements can be met.
Lubrication	Pressure lubricated. Additional oil may be required after reading one million feet of tape.
Sensing Element Life	10,000 hours.
Tape Life	Thousands of passes of clear Mylar, 100 passes of a free-hanging loop of common yellow paper.

INPUT SIGNAL REQUIREMENTS:

Select Line (i.e. Motor Start-Stop Control): The reader "select" signal feeds a "NOR" circuit of 10K input impedance to turn the reader motor "on". The "on" condition is represented by –10 volts, motor "off", 0 volts. As soon as operating motor speed is reached, the "up-to-speed" output signal is produced and the remaining reader control circuits are activated.

Read Request: The read-request signal feeds a "NOR" circuit of 10K input impedance. To initiate a single read cycle, the negative pulse must have a width at the top of at least 30 microseconds, and must start at 0 volts, fall to –10 volts and return to 0 volts with 5 microsecond or less rise and fall times. If held on continuously, the reader will continue to read at its maximum rate. The read-request must return to ground before the trailing edge of the sprocket strobe pulse (i.e. 50 microseconds after the leading edge of the strobe pulse). A read-request pulse applied during the strobe pulse interval must be retained on until at least 20 microseconds after termination of the strobe pulse.

Reader Reverse: The reader-reverse signal cycles the reader to read the code then positioned over the tape sensing head. The tape feed is then reversed and the tape backed up one character. During this operation, in the 300 cps FRA-1, the up-to-speed signal will be off for approximately 5 seconds to inhibit acceptance of further controlling signals while the drive motor's direction is being reversed. The 10K impedance reader-reverse line feeds a DC level into a "NOR" circuit. Reverse tape feed occurs with –10 volts drive, forward feed, 0 volts.

Slew Control: (Optional feature available at additional cost.) The 10K impedance "slew" line feeds a DC level into a "NOR" circuit. Upon excitation of slew, and as soon as any tape transport operations then in process are complete, the sprocket detent is lifted. Tape then may be pulled over the freewheeling sprocket by external tape drive. The "up-to-speed" indicator is inhibited whenever the slew line is actuated. **WARNING:** Interlocks must insure that the slew control signal is maintained for the duration of external tape drive.

Input Gate: Each of the reader code amplifiers accepts a gate input to permit strobing or sampling of the amplifiers by external pulses. Gate inputs for all channels are bussed together and tied to the chassis connector. To turn the amplifiers off, the 10 K load should be switched from –10 volts to ground.

OUTPUT SIGNALS:

Reader Up-to-Speed is provided when the reader is above two-thirds speed and the timing signal levels are adequate to provide reliable operation. Up-to-speed indication, –28 volts from a 2.7 K internal impedance. Below speed indication, 0 volts. Allowable current 10 ma. The signal is turned off by an out-of-tape indication. Local circuits automatically are inhibited when the up-to-speed signal is off.

Code Lines 1 through 8 provide 0 to –0.2 volts for "no-hole" (10 ma), –28 volts from a 2.7 K source for a hole. One code line output is provided for each tape level. A common bus to all amplifiers permits –10 volt pulses to concurrently strobe, or gate, all of the reader outputs. Read pulses of 200 to 300 microseconds duration, with rise and fall times sharper than 10 microseconds, are provided when an external jumper is used to connect the sprocket strobe terminal to the gate input terminal.

Sprocket Strobe: For no-hole condition, 0 to –0.2 volts, 10 ma allowable load. Code present condition, –28 volts from a 2.7 K source, 100 to 200 microsecond duration, with rise and fall times faster than 10 microseconds.

SOLENOID READERS

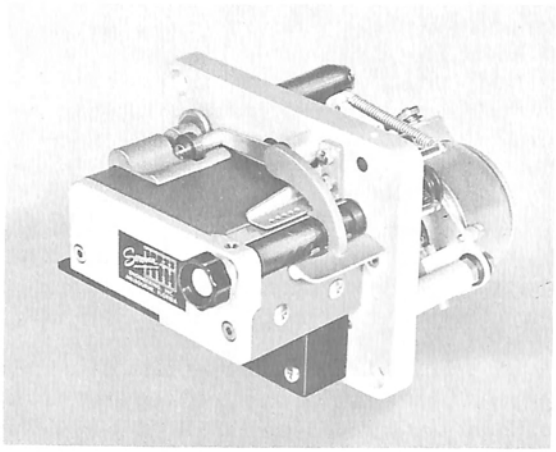

FR-410S SOLENOID READER, FRONT VIEW

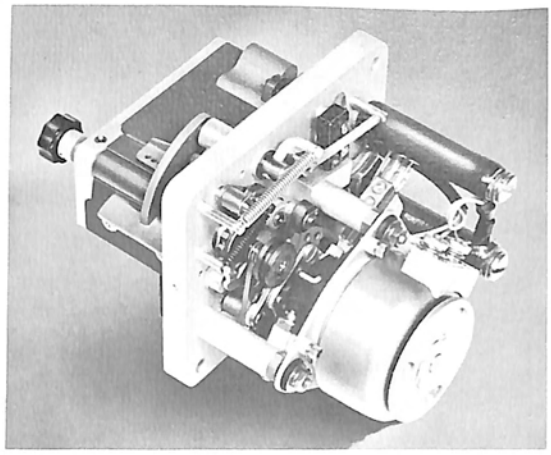

FR-410S SOLENOID READER, REAR VIEW

The Solenoid Driven Readers were designed to provide a compact, self-contained, plug-in reader head suitable for operation in extreme environments. After years of development, a truly rugged reader drive solenoid finally has been perfected at Soroban. Although the solenoid makes use of a commercial coil and hard chrome-plated shell as its base, the Soroban modifications have extended the solenoid's life to a limit heretofore believed unachievable.

Although not originally designed for adherence to Military Specifications, the new and improved Models FR-410S and FR-450S readers, which now use non-nutrients throughout, will pass the military dissimilar metals specifications. The readers will pass a 50 hour salt-spray test as well as certain sand and dust environmental tests. Non operating, they will sustain up to 20Gs of shock and vibration. Operating they will sustain 10Gs of vibration from 0 to 55 cycles. Recent design improvements in the FR-400S series readers have nearly eliminated the contact bounce problem which was so troublesome in the early Model FR-310S readers.

The compact self-powered "plug-in" solenoid readers utilize rotary solenoids to produce the driving force. During reading, sensing pins close reading contacts during the solenoid energize stroke. The contacts remain closed as long as the drive solenoid is energized. Tape advance occurs during the solenoid de-energize stroke. Such operation permits the function of tape reading to be positively interlocked with external control circuitry. Solenoid readers are generally considered for applications requiring a reading rate of less than 20 codes per second.

Two standard reading heads are available, the Model FR-450S for dual or wide tapes and the Model FR-410S for single 5, 6, 7, or 8 level tapes. The Model FR-450S readers are designed for reading single 16 level perforated tapes or two tapes of 5, 6, 7, or 8 levels. When reading dual tapes, the reader transports the two tapes as though they were a single wide tape.

ELECTRICAL CONTROL OF SOLENOID DRIVEN READERS — Solenoid excitation always should be provided until, and interlocked with, the operation of the reader's common contact (RCC). Following each read cycle, excitation should be removed until the "beginning of stroke" contact B resets. Solenoid readers should never be sequenced from pulses of fixed duration. Since the operate times for units operating under extreme temperature and dirt environments, as well as for readers which have been subjected to extended periods of storage, deviate materially from the figures presented here, interlocked circuitry must be employed to achieve reliability.

The accompanying circuit illustrates the use of the RCC contact, as well as other basic principles applicable to reliable control of solenoid driven readers. The controls demonstrate:

a) one method of eliminating the effects of low frequency contact bounce,

b) the use of the reader tape contact (RTC) to inhibit operation of the reader when out of tape, as well as

c) the use of the reader's "B" contact to insure that each read cycle is completed before the reader is again ordered into a succeeding reading cycle.

It should be remembered that these circuits are illustrative of how the reader may be controlled. In most applications, equipment economies can be realized by integrating such functions into the associated system's circuitry.

During the circuit discussion, it should be remembered that while designing electronic controls for use with electrical contacts, the actual contact closings will always contain contact chatter. For example, wiping during contact overtravel, a mode of operation intended to improve contact reliability by requiring the contact points to rub and clean each other, must

produce contact hash. Although the slow response times of relays generally filter the contact noise produced by devices which drive them, the relays themselves generate additional noise. Thus the design of electronic control circuits which are to use contact operating devices does require consideration of the ever existing contact noise problem.

In the accompanying example, the major effects of low frequency reader contact bounce are controlled by the filtering action of the relatively slow operating relay, K1, which follows the reader. If the relay's pickup time is 10 ms or more, reader contact bounce will have terminated prior to closure of K1's contacts. To insure completion of each read cycle, a second relay, K2, is provided. K2 removes power from the reader drive solenoid. Since K2 is held by the reader's "B" contact during the interval when the reader solenoid is energized, K2 cannot release until the completion of the solenoid de-energize stroke.

SELF-CYCLE OPERATION — When the control switch is operated for the self-cycle mode of operation, power is supplied to the reader solenoid from the reader tape contact (RTC), through the control switch and relay contacts K2-B. When the reader common contact (RCC) operates, relay K1 is energized through relay contact K2-C. The delayed pickup of K1 permits use of contact K1-C as a delayed reader common, or sync contact. The contact can be made to close after the code contacts RC1 through RC8 are through bouncing.

Relay K2 is energized through operation of contact K1-A. The operation of K2 removes power from relay K1, permitting it to drop out. However, power to the reader solenoid is maintained until contact K1-B opens. Thus the common or sync signal is reset before the reader code contacts are reset. Relay K2 remains energized through contact K2-A until reader beginning of stroke contact "B" reopens at the end of the solenoid's de-energized stroke. As soon as K2 drops out, the reader will recycle if the control switch remains operated. The circuit through reader contact "B" and relay contact K2-A maintains power on the reader solenoid to insure execution of a complete reader cycle in the event that the control switch is reset prior to completion of a reading cycle. As noted, the cycle time may be adjusted by varying the suppression across K1 and K2. The length of time a code is available may be increased by reducing R3, and the time between read cycles may be increased by reducing R4.

SINGLE-CYCLE OPERATION (Fixed Width Output Pulse) — When the control switch is operated in this mode, power is applied to the reader solenoid, RCC operates, and relay K1 is energized. The reader code and sync signals are thereby generated. The minus voltage at pin A permits relay K2 to be energized upon closure of K1. The pickup of relay K2 drops off both relay K1 and the reader drive solenoid. However, the reader will not recycle until the control switch is returned to normal, thereby dropping off K2.

SINGLE-CYCLE OPERATION (Controlled Width Output Pulse) — When the control switch is operated in this mode, power is applied to the reader solenoid, RCC operates and relay K1 is energized. Through its contact K1-C, operation of K1 provides a reader sync signal when the reader code contacts are through bouncing. The reader solenoid and K1 are held energized until K2 picks up. However, K2 cannot energize until the control switch is returned to normal. Thus, for each read cycle, the control switch must be operated and reset to normal. The duration of the output pulse is established by the operating interval of the control switch.

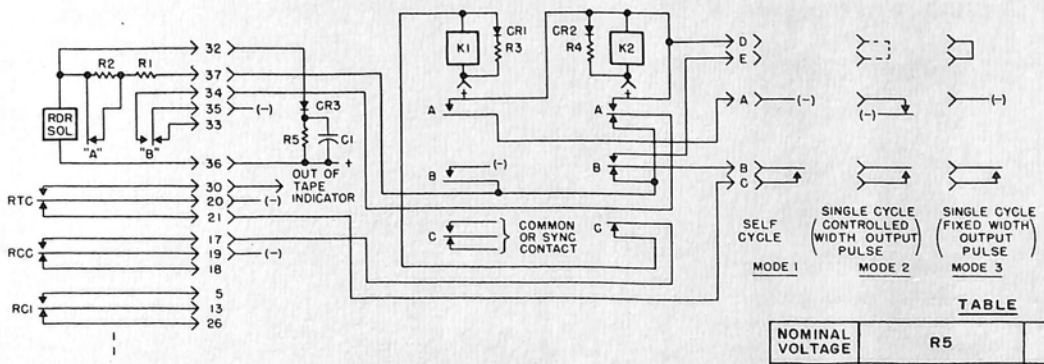

TABLE

NOMINAL VOLTAGE	R5	C1
12	100 OHM, 2 WATT	100–150 μfd., 50 V.
24–28	330 OHM, 2 WATT	20–40 μfd., 100 V.
48	1.2 K, 2 WATT	6–12 μfd., 150 V.
90	4.7 K, 2 WATT	2–4 μfd., 250 V.
135	20 K, 2 WATT	0.5–1.0 μfd., 400 V.

APPROXIMATE SELF CYCLE OPERATING SPEEDS (90 V. FILTERED SUPPLY
K1 AND K2 ARE 3.4 K CLARE "J" RELAYS.)
14 CPS WHEN K1 AND K2 SUPPRESSED BY 330 OHMS IN SERIES WITH 0.1μfd.
10 CPS WHEN K1 AND K2 SUPPRESSED BY 5K IN SERIES WITH DIODE.
7 CPS WHEN K1 AND K2 SUPPRESSED BY DIODE.

TYPICAL CONTROL CIRCUIT FOR SOLENOID READER

SOLENOID READERS

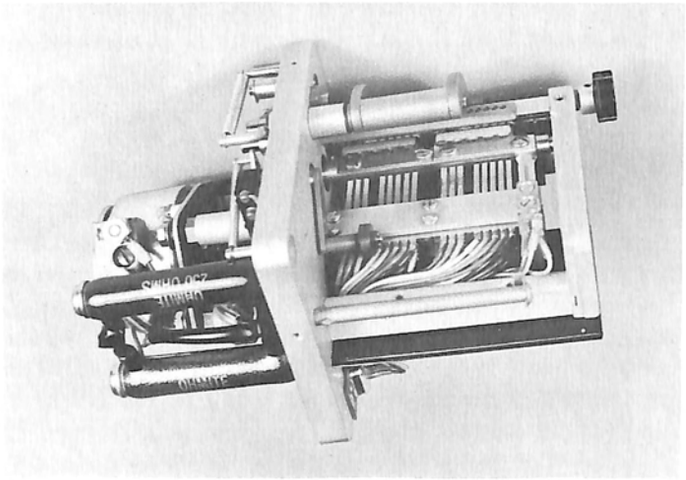

FR-450S READER, COVER REMOVED

FR-410S AND 450S SPECIFICATIONS

Solenoid Drive

Approximately 80 watts peak power is required for the first 20 milliseconds of the solenoid energize stroke, with 30 watts of holding power required thereafter. Standard readers are available for 90, 48, 28, and 12 volt d.c. operation. Normal solenoids are intended for operation in ambient temperatures from freezing to +140° F. The drive solenoid case may rise to temperatures in excess of 200°F when subjected to continuous service. Provisions should be made for removal of the 30 watts of heat dissipated by readers operated under such conditions. Readers for operation in ambients below freezing to +160° F can be supplied on special order.

Operate Time

The times required for RCC to close after application of solenoid drive, at room ambient temperatures are as follows:

	FR-410S Single Readers	FR-450S Dual Readers
Rated voltage	20±5ms	22±5ms
15% above rated voltage	17±5ms	20±5ms
15% below rated voltage	25±5ms	35±5ms

Reset time is dependent upon solenoid suppression. RCC may reset as early as 3 ms and as late as 14 ms and contact B as early as 10 ms and as late as 20 ms after removal of solenoid drive.

WARNING: Solenoid readers will not exhibit reliable tape advance if simple diode, back-to-back diode or thyrite elements are used for solenoid suppression. Resistor-capacitor suppression must be used, preferably in conjunc-

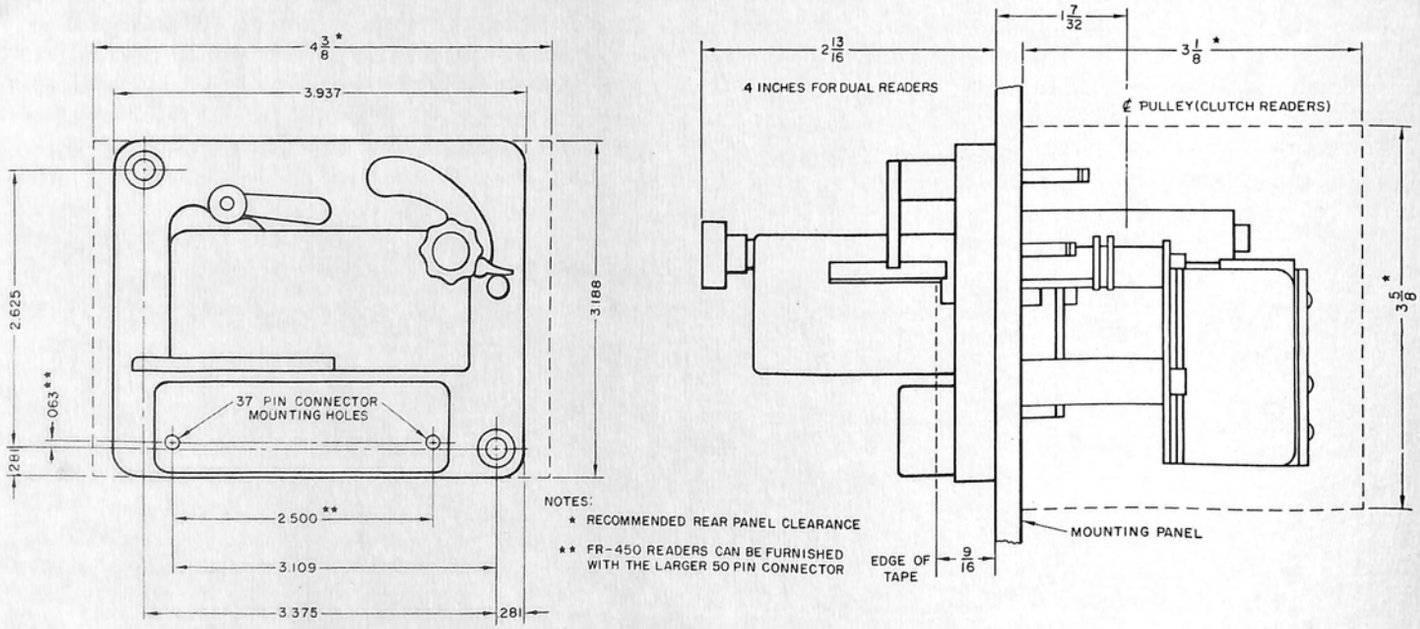

tion with an isolation diode. In addition, when transistors are used to energize the drive solenoid, the collector-emitter breakdown voltage must exceed three times the solenoid drive voltage. Finally, application of solenoid drive pulses of fixed duration will not produce reliable operation. Solenoid drive circuits must be interlocked with the operation of the reader's contacts as described on pages 46 and 47.

RCC Contact Reader COMMON CONTACT, bifurcated palladium, form C, 2 ampere resistive load, operates on every solenoid stroke. Adjusted so that during the solenoid energize stroke, the normally closed side opens before, and the normally closed side closes after the code contacts operate.

RC Contacts Reader CODE CONTACTS, single moulded assembly with bifurcated Paliney 7 poles, form A, B, or transfer, one ampere 110 volt resistive load. WARNING: When transfer contacts are employed, opposing battery potentials should never be applied directly to the outer contact leafs. Current limiting must be provided to protect against possible contact overlap.

RTC Contact Reader NO-TAPE CONTACT, form C, 5 ampere resistive load.

"A" Contact Bifurcated palladium, form B, 2 ampere contact which operates near the end of the solenoid energize stroke. The "A" contact inserts the reader holding resistor.

"B" Contact Bifurcated palladium form C, 2 ampere contact which operates early during the energize stroke and resets near the end of the de-energize stroke. The "B" contact is used to indicate completion of a reading cycle.

Contact Bounce The contacts of the FR-400 series solenoid readers deteriorated through field use may exhibit bounce up to 1 ms duration during the solenoid energize stroke, whereas in the old FR-300 series, contact bounce was of 3 ms duration, or greater. Bounce will be complete within 10 ms of initial contact closure. Negligible bounce is exhibited during the solenoid de-energized stroke.

Weight Single readers, FR-410S, 2 lbs.
Dual readers, FR-450S, 2½ lbs.

Tape Pull A detent is provided on the reader sprocket. Unless ordered otherwise, the detent will be adjusted to slip when tape drag exceeds the 8 ounces necessary to damage sprocket holes of standard paper tape. When Mylar tape is used, detents can be adjusted to slip when tape drag exceeds a specified force of up to approximately 30 ounces.

Tape Model FR-410S readers are designed to read standard 5, 6, 7, and 8 hole tapes. Model FR-450S readers are designed to read two adjacent 5, 6, 7, or 8 hole tapes, or a single 16 hole tape. Readers are available for use with both fully perforated and chadless tapes, as well as tapes with advanced feed holes.

Tape Life A free hanging loop of common paper tape can be read at least 1000 times before encountering tape damage sufficient to introduce reading errors.

Panel Mounting Panel mounts are available as described on pages 58 and 59, "Reader Panels." When special customer manufactured panels are to be used, the Reader Shock Mounting Plate, #B-0627, is available. The plate mount is not recommended if the reader is to be subjected to stringent radio frequency interference restrictions.

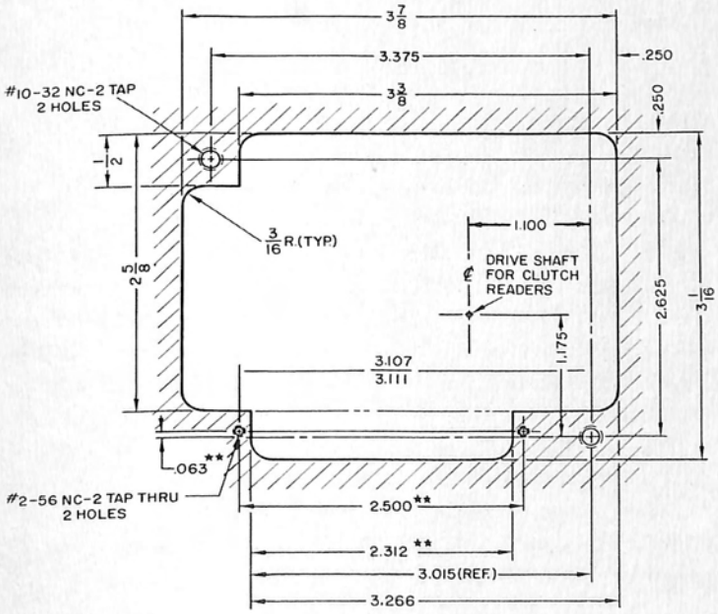

FR-410 AND FR-450 OUTLINE DIMENSIONS

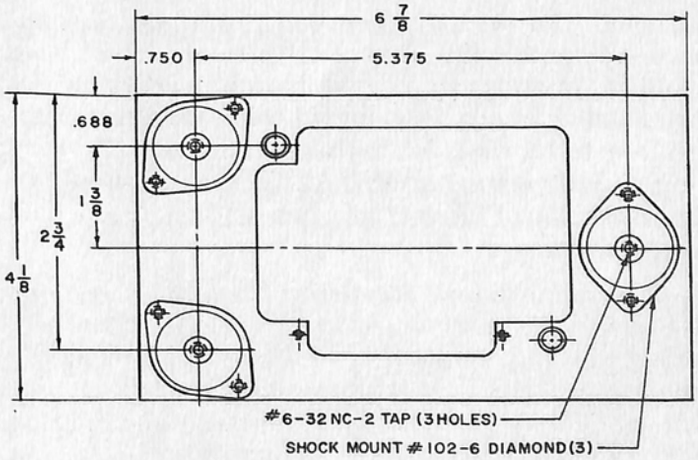

B-0627 SHOCK MOUNT

GENEVA-CLUTCH READERS

Although all Soroban tape reader designs emphasize the gentle handling of tape, the Soroban Geneva - Clutch Reader surpasses all of its companions with respect to tape life. It is not unusual for the relatively silent Geneva readers to process a free hanging loop of common yellow paper tape for 10,000 passes or more before tape damage becomes sufficient to introduce reading errors.

The Geneva-clutch reader is available in two heads, namely the Model FR-450M for dual or wide tapes and the Model FR-410M for single tapes. The Model FR-450M readers are designed for reading single 16 level perforated tapes or two tapes of 5, 6, 7, or 8 levels. When reading dual tapes, the reader transports the tapes as though they were a single wide tape. When supplied without clutch for bidirectional tape reading through directly geared drives, the suffix "G" follows the Model number (e.g., FR-410G and FR-450G); when clutch-equipped, the suffix "M" applies (i.e., FR-410M and FR-450M).

For optimum equipment life, mechanical devices should be operated at the speed which minimizes the sequencing of their respective components. Thus, in clutch readers, a reading rate should be selected which minimizes sequencing of the clutch. For example, a typewriter which prints at 10 codes per second should be driven from a clutch-driven reader whose drive shaft is rotated at a speed of 10 codes per second. In this application, a clutch operation is required only during tabulate or carriage-return intervals. Cycling of the reader's clutch is not required for each printed character.

Although the compact Soroban reader clutches exhibit a long stable life, free of adjustment for at least 20 million operations, use of clutch readers is not recommended in applications where a very few characters are to be read for each clutch cycle. If very frequent clutching is required, consideration should be given to the use of latch controlled readers, or solenoid driven readers.

Besides the ordinary start-stop function, a reader's clutch assembly also includes means for precisely stopping and indexing the reader's drive shaft at the predetermined shaft position where the sensing pins are down. Thus, when reading commences, actuation of the reader control solenoid displaces both a clutch stop arm as well as a clutch latch. Release of the control solenoid returns the stop arm to the "halt" position. The reader's drive shaft rotates until the stop lug engages the stop arm, at which time inertia winds up the clutch until it latches. To prevent damage to both the stop arm and its engaging stop lug, as well as to permit reliable reader stopping, it is necessary that the arm be fully positioned prior to engagement

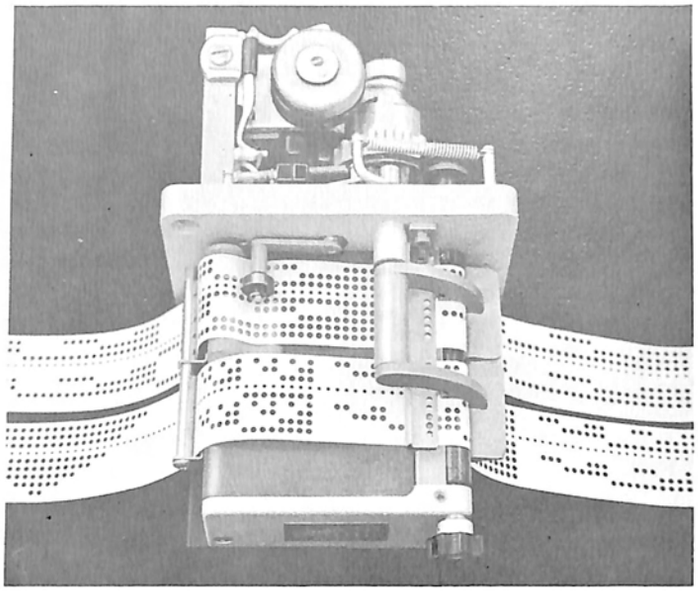

FR-450M READER

of the stop lug. Repeated partial engagement of the lug will ultimately produce nicking and destruction of both lug and stop arm. To insure that the stop arm has fully returned, power to the clutch solenoid should be removed during the active portion of the reading cycle when the reader common contact (RCC) remains operated. Clutch solenoid power should not be removed after RCC has returned to the normal unoperated position.

As with most single-revolution clutches, the Soroban reader clutches are sophisticated overriding clutches. If the clutch is first tripped, and then its drive sprocket blocked, application of torque to the reader drive shaft in the normal direction of rotation results in clutch slippage. Application of reverse torque to the shaft produces braking. The overriding action produces clutch precession in readers operated at the higher speeds. The negative inertia load encountered at the end of a tape feed cycle produces a precession that causes readers operated at high speeds to read at a rate appreciably faster than would be established by direct gearing to the motor-drive shaft. Such precession may increase the reading speed 10 per cent for a reader geared for 30 code per second reading. Although the effect is negligible for readers operated at the lower speeds, it does preclude simple synchronized operation of two or more clutch readers powered by a common drive motor.

From the preceding, it is obvious that the Geneva readers permit unidirectional reading when provided with the solenoid controlled single-revolution clutch. However, when bidirectional reading is desired, the readers must be driven through direct drive gearing.

GENEVA-CLUTCH READERS

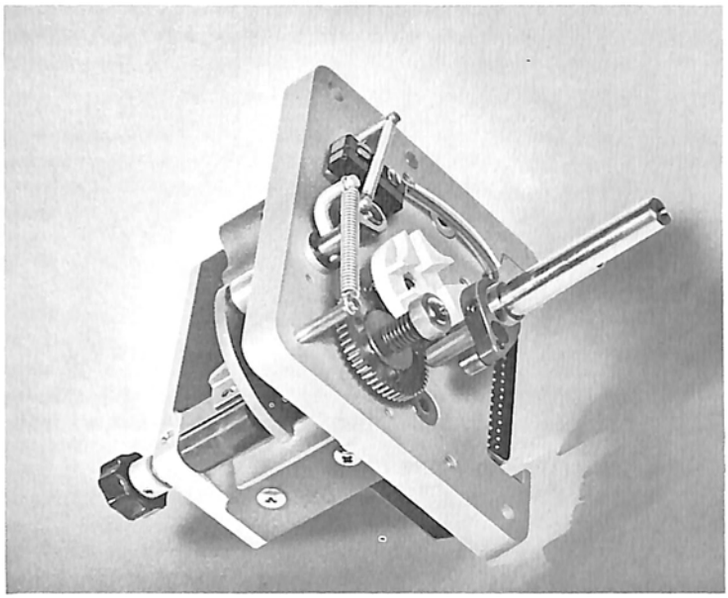

FR-410G READER

Unfortunately, the inertia of the direct gearing precludes selective reading as would be available from a clutch operated device. Direct gearing does not permit automatic halting of the reader with its sensing pins down.

Timing for clutch-driven readers is indicated in the accompanying figure. It should be noted that contact closures are maintained for 180 degrees of each reading cycle. WARNING: During circuit debugging, it is common practice to sequence clutch-driven readers by manually depressing the control solenoid and manually rotating the drive shaft. Following such test operation, the operator should insure that the clutch is fully latched prior to application of motor-drive power. Slippage resulting from motor drive of an unlatched clutch will produce serious and permanent clutch damage.

OPERATION OF GENEVA-CLUTCH READERS — The accompanying schematic is presented to illustrate the basic operation of the Geneva-clutch tape readers. While designing electronic circuits for use with electrical contacts, it should be remembered that the actual contact closings will always contain contact chatter. For example, wiping during contact overtravel, a mode of operation intended to improve contact reliability by requiring the contact points to rub and clean each other, must produce contact hash. Although the slow response times of relays generally filter the contact noise produced by devices which drive them, the relays themselves generate additional noise. Thus the design of electronic control circuits which are to use contact operating devices does require consideration of the ever existing contact noise problem.

The circuit presented here demonstrates the more common considerations applicable to the design of clutch-reader control circuits. Through use of the reader's tape contact (RTC), the circuit provides an interlock to inhibit tape advance when out of tape. The reader stops within two characters after operation of RTC (RTC is located approximately two inches from the tape-reading station).

To prevent damage to the clutch's stop lug, the stop control is interlocked with the read cycle through the reader common contact (RCC). The reader control relay (RCR) has two holding contacts, one to the stop switch and no-tape contact, the other to the reader common contact (RCC). These interconnections insure that RCR is de-energized only during the period in which RCC is transferred.

With the stop switch held operated, the reader will perform one reader cycle during the release portion of each operation of the start switch.

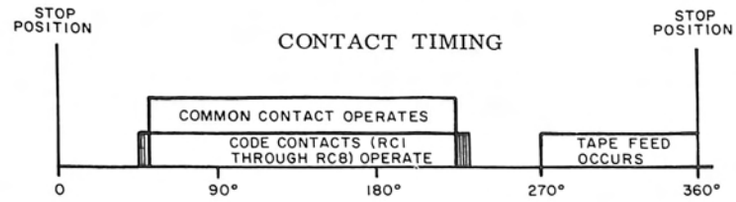

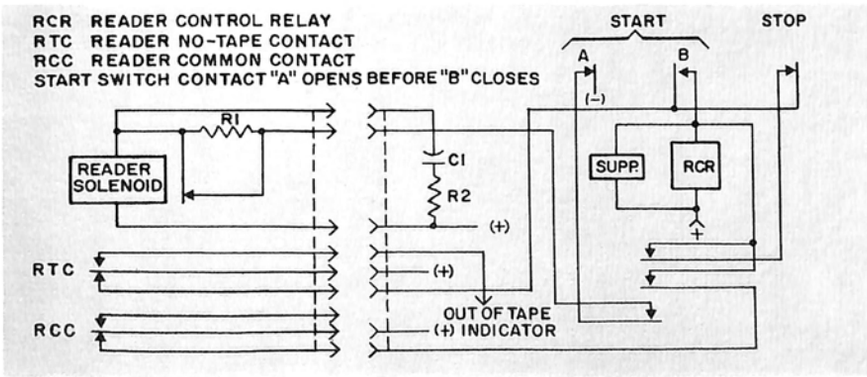

TYPICAL CONTROL CIRCUIT FOR MOTOR-CLUTCH AND LATCH READERS

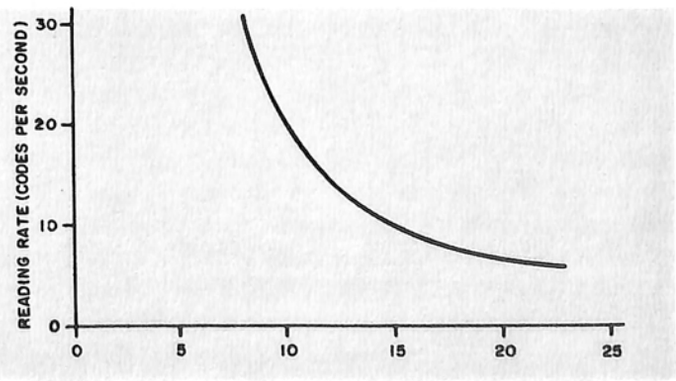

ACCESS TIME TO CODE-CONTACTS (ms)

SPECIFICATIONS
FR-410M, FR-450M, FR-410G and FR-450G

Reader Designation — Model FR-410G, direct motor driven reader, for single 5, 6, 7, or 8 hole tape. Model FR-450G for two 5, 6, 7, or 8 hole tapes or a single 16 hole tape. Models FR-410M and FR-450M are the equivalent clutch readers, operated at speeds of 30 cps and less. The higher speed Model FR-410XM readers have been discontinued.

Clutch Solenoid — 18 watts for 10 to 15 ms, 9 watts holding power thereafter. Standard solenoids are available for 90, 48, 28, and 12 volts d.c. operation. Normal solenoids are intended for operation in ambient temperatures from freezing to +140° F. Readers for operation at higher temperatures can be supplied on request. In all readers, the solenoid case may rise to temperatures in excess of 180° F. Provision should be made for removal of 9 watts of heat from the vicinity of the reader head.

Clutch Drive — Reader clutches are normally equipped with .234 pitch Gilmer drive sprockets. Clutch sprockets with 18, 27, 36, and 42 teeth are available. Both full-revolution and half-revolution clutches are available. The half-revolution clutch permits stopping the reader half-way through the reading cycle with sensing pins elevated and reading contacts operated. The roller type single-revolution clutches, mounted on 5/16" shafts, are rated at 10-inch pounds of torque. Bonded rubber stop arms are provided.

Drive Motor — 1/40 HP induction motor. For clutch readers, .234 pitch Gilmer sprockets with 10, 12, 13, 14, 15, 16, 18, 27, 36, and 42 teeth are available.

RTC Contact — Reader No-Tape Contact, form C, 5 ampere resistive load.

RCC Contact — Reader common contact, bifurcated palladium, form C, 2 ampere resistive load, operated during every reading cycle. Adjusted so that during the reading cycle, the normally closed side opens before and the normally open side closes after the code contacts operate.

RC Contacts — Reader code contacts, single moulded assembly with bifurcated Paliney 7 poles, form A, B, or transfer, one ampere 110 volt resistive load. WARNING: When transfer contacts are employed, opposing battery potentials should never be applied directly to the outer contact leafs. Current limiting must be provided to protect against possible contact overlap.

Contact Bounce — Clutch readers operated at speeds up to 30 cps exhibit high frequency hash produced by the self-cleansing or wiping action of contacts during overtravel. Simple resistor-capacitor filters should be used on reader contacts which drive electronic circuits (an R in series with the contact and load, with a parallel RC across the load).

Tape Pull — A detent is provided on the reader sprocket. Unless ordered otherwise, the detent will slip when tape drag exceeds the 8 ounces necessary to damage sprocket holes of standard paper tape. When Mylar tape is used, special detents can be provided to slip with tape drags as great as 30 ounces.

Weight — Single readers, FR-410M, 2 lbs.

Dual readers, FR-450M, 2½ lbs.

Tape — Readers are available to read standard 5, 6, 7, 8, and 16 hole tapes, both fully perforated or chadless, as well as tapes with advanced feed holes.

Tape Life — A free hanging loop of common paper tape can be read at least 5000 times at 30 characters per second before encountering tape damage sufficient to introduce reading errors.

Panel Mounting — Panel mounts are available as described on pages 58 and 59, "Reader Panels." When special customer manufactured panels are to be used, the Shock Mounted Assembly, Model RM-410, is available. Use of the assembly assures proper reader speed, shock mounting, motor torque capacity etc. Although the motor is pictured to the left, depending upon the operating speed of the unit requisitioned, it may be either on the right or left side of the assembly. Such variations will not effect the mounting dimensions of the reader and shock mounted assembly from those indicated.

Mounting Dimensions — The front of panel outline dimensions are identical to those presented for the solenoid reader on pages 48 and 49. The Geneva-clutch drive shaft location is dimensioned in the panel cutout, while the centerline for the Gilmer drive pulley is indicated in the side view on page 48.

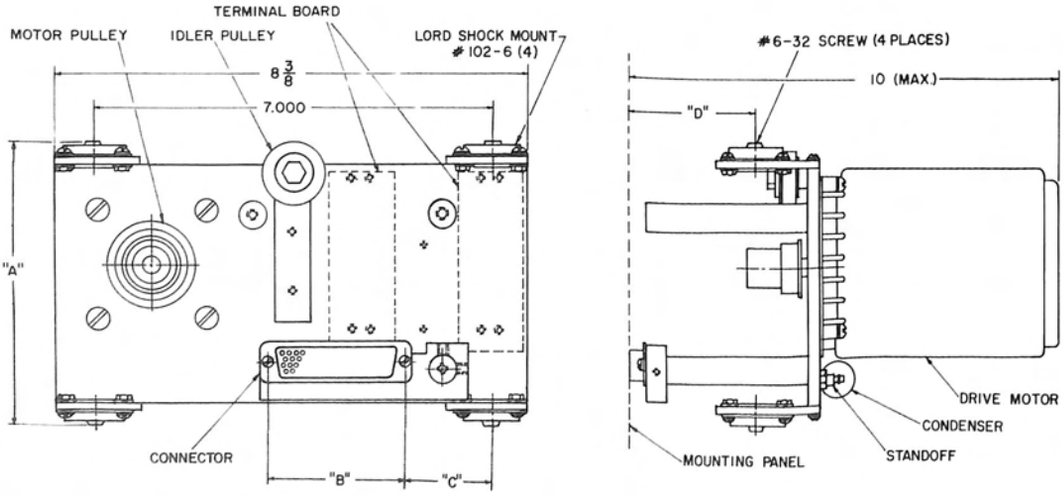

FR-2 READER
"A" – 4 11/16
"B" – 2.406
"C" – 1 19/32
"D" – 2.200

FR-410 READER
"A" – 4 19/32
"B" – 2.500
"C" – 1 19/32
"D" – 3.125

FR-450 READER
"A" – 4 19/32
"B" – 2.406
"C" – 1 19/32
"D" – 3.125

RM-410 SHOCK MOUNTED ASSEMBLY

LATCH READERS

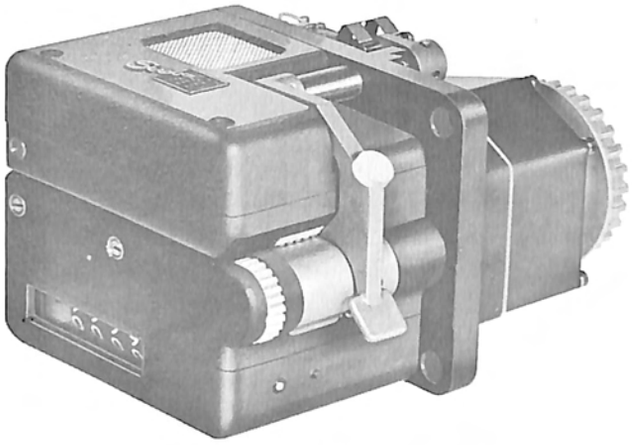

MODEL FR-2L LATCH READER

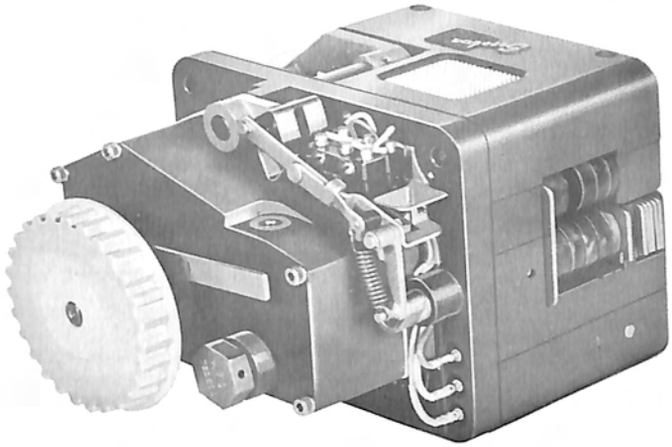

MODEL FR-2L READER, REAR VIEW

The Soroban FR-2L synchronous latch reader was designed for use in rugged military environments where true reading reliability coupled with exceptional tape and reader life were prerequisites. Reliable long life has been achieved, whether character-by-character or continuous reading is employed. It is not unusual for a latch reader to process a free hanging loop of common yellow paper tape while reading at 100 codes per second for 200 passes; 500 passes at 60 codes per second; or thousands of passes at lower speeds before tape damage becomes sufficient to introduce reading errors. Although originally released for reading at speeds up to 100 codes per second, introduction of the nearly indestructible FRA-1 anemometer sensing reader is now recommended for all applications involving reading at speeds between 60 and 300 codes per second.

The FR-2L latch readers, for operation at speeds up to 60 codes per second, are available for operation in ambients from −65° F to +160° F with shock and vibration up to 20 Gs. The reader is capable of passing a 50 hour salt-spray test as well as military explosion-proof tests. During the design of the FR-2L, particular emphasis was placed on the requirements of MIL-E-16400.

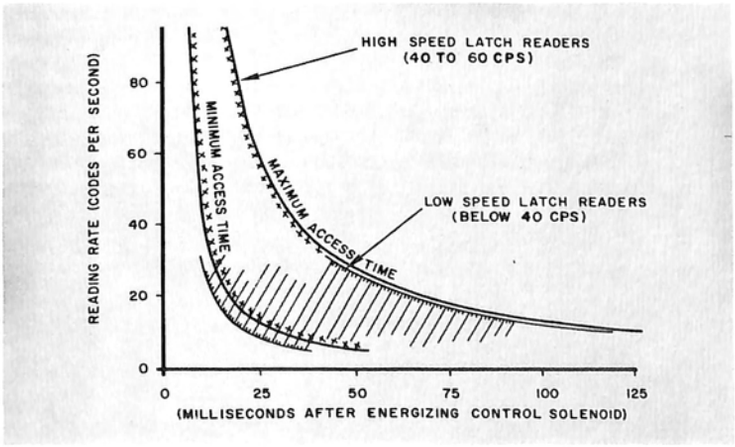

ACCESS TIME TO CODE-CONTACTS

During reading, two constantly rotating cams with followers provide the drive forces necessary to sequence the sensing pins and tape transport components. Mechanical latches interlock the sensing and feed operations as well as insure that each reading operation is full and complete. The latches couple the reader mechanism to its drive only during the final one-sixth of a revolution of the reader's main shaft. Mechanical interlocks prevent engagement or disengagement of the drive except during this interval. Thus, following actuation of the reader's control solenoid, engagement of drive will be delayed until the drive shaft has rotated to the final 60 degree interval. Following reading, the coupling mechanism will be automatically reset only during the final 60 degrees of drive shaft rotation regardless of when the control solenoid has been de-energized. From the preceding it can be seen that excitation of the actuating solenoid may be required for more than a full rotation of the drive shaft before the mechanical interlocks permit the reading mechanism to be engaged.

Once the reader's drive has been engaged, the mechanical interlocks direct execution of a full reading operation without further need for electrical excitation of the control solenoid. To insure that the electrical drive has been maintained until the mechanical drive has engaged, the control solenoid should be actuated until the reader's common contact (RCC) operates. DC excitation of the solenoid is permitted during continuous reading. Upon recognition of the last code to be read, the control solenoid should be de-energized as early as possible after the initial operation of RCC; and definitely before RCC resets.

Drive to the FR-2L is through a Gilmer timing belt, generally from an induction motor. Since the latch

readers are synchronously driven, two or more heads driven from a common rotational power source will maintain synchronism. Application of solenoid drive to ganged groups of reader heads should be established by timing from one of the readers' cam timing contacts (CTC). Reverse reading can be achieved by reversing a reader's drive-shaft rotation. A solenoid operated slewing clutch (optional feature) permits disengagement of the feed sprocket drum's detent so that tape may be pulled through the head with a minimum drag. A mechanical counter (optional feature) is provided to count the number of recorded characters which pass the reading station, either during slewing or normal forward or reverse reading. When character counters are employed, the maximum speed for tape slew must be limited. A maximum slew speed is usually established by an auxiliary motor-driven slew capstan. By comparison, drive of the tape reels usually accommodates slewing for readers which do not contain character counters.

ELECTRICAL CONTROL OF LATCH READERS — The circuit presented for operation of clutch readers on page 50 is also recommended for control of the latch readers. The comments on page 51 with respect to contact noise apply to both the clutch and latch readers. It should be recognized that actuating pulses for sequencing of a clutch reader for character-by-character reading were of a relatively constant duration. By comparison, actuating pulses for the latch reader vary from one-sixth of a reader's main shaft cycle to appreciably more than one such cycle. Thus, in the latch reader, control circuits also must be interlocked with the operation of the reader common contact (RCC).

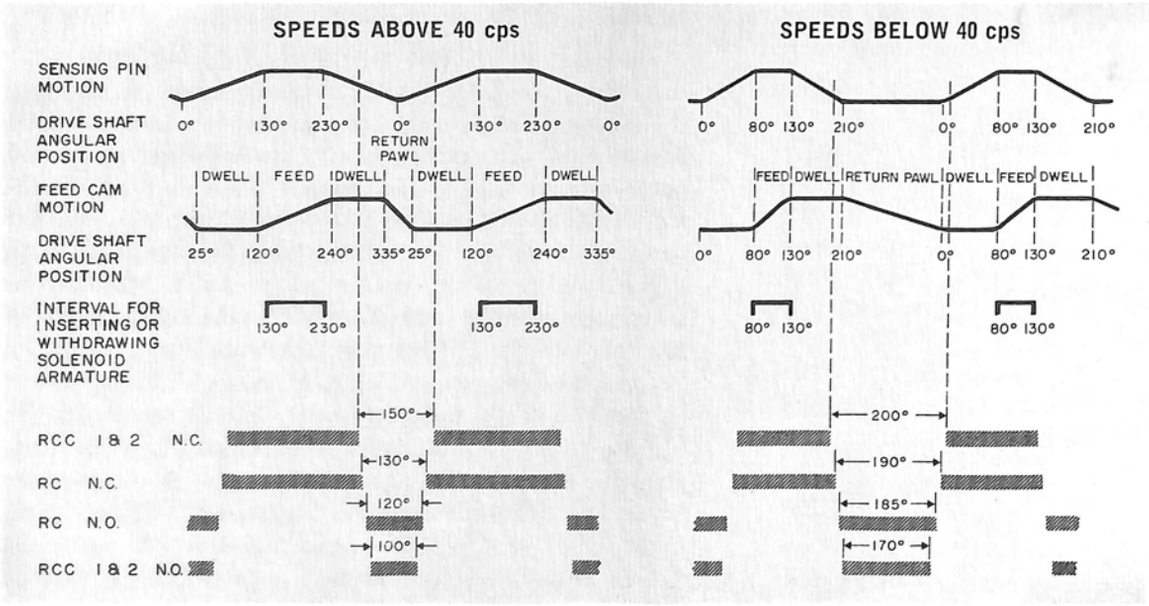

LEGEND:

NC—Normally closed contact

NO—Normally open contact

—Contact closed

NOTES:

1. To read character apply power to solenoid at least 4ms before end of armature insertion interval.
2. To inhibit reading of next character remove current from solenoid while normally open RCC #1 and RCC #2 are closed.

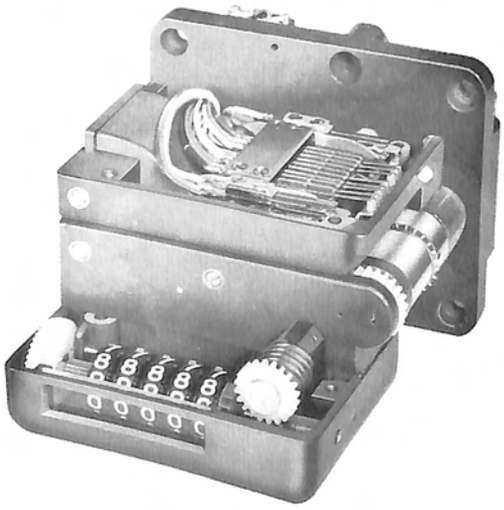

FR-2L READER SHOWING COUNTER AND CONTACTS

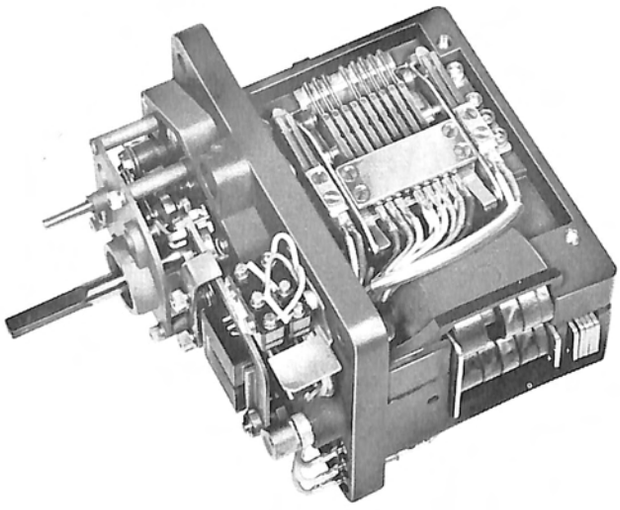

FR-2L READER SHOWING DRIVE MECHANISM

FR-2 SPECIFICATIONS

Reader Designation — Model FR-2L Readers are designed to read standard fully perforated 5, 6, 7, and 8 hole tapes.

Solenoid Drive — Approximately 6 watts of power is required for the 135 ohm solenoid of the standard 28 volt reader. Pickup and drop-out times are approximately 4 milliseconds. Series dropping resistors are required for operation at higher voltages. When controlling latch readers from transistor circuitry, the drive transistor should have a collector-emitter breakdown potential three times the solenoid drive voltage.

RTC Contact — Reader NO-TAPE CONTACT, form C, 5 ampere resistive load.

RCC Contact — Reader COMMON CONTACTS, two contacts are provided to operate each reading cycle; form C, 2 ampere resistive load, bifurcated palladium. Adjusted so that during the reading cycle, the normally closed side opens before, and the normally open side closes after the code contacts operate. RCC #1 and #2 differ in operate times by less than 0.1 ms.

RC Contacts — Reader CODE CONTACTS, single moulded assembly with bifurcated Paliney 7 poles, form A, B, or transfer, one ampere 110 volt resistive load. Reader contact closures of 180 degrees are available for readers operated at speeds up to 60 cps. Readers operated at higher speeds have been discontinued in favor of the anemometer sensing FRA-1 tape readers. WARNING: When transfer contacts are employed, opposing battery potentials should never be applied directly to the outer contact leafs. Current limiting must be provided to protect against possible contact overlap.

CTC Contacts — Reader CAM TIMING CONTACTS, bifurcated, 2 ampere rated, form A or C. Two CTC's are available in readers equipped with character counters. Five CTC contacts are available in other readers. 180°, 60°, and 30° contact closure, adjustable to any timing angle, are available from stock. Other cams can be provided on order.

TTC Contacts — Reader TIGHT-TAPE CONTACTS—Although 5 ampere, form C contacts can be provided in the reader head on special order, use of auxiliary panel mounted slack arms equipped with travel limit switches is recommended.

Contact Bounce — Bounce and contact chatter in readers operated at speeds up to 100 cps is complete within 1.0 ms after transfer of the common contact.

Drive Motor — 1/30 HP for Readers to 40 cps.
1/10 HP for Readers to 100 cps.

Character Counter — A mechanical counter to keep track of the number of characters which pass the reading station, either forward or reverse, can be provided. Two counters are available. Low-speed counters register one digit for each character and can count at rates up to 150 cps. Where higher rates are required, 10 to 1 gearing to the first decade permits counting at slewing speeds up to 1500 cps.

Reading Rate — Up to 60 codes per second, character - by - character or continuous.

Reading Direction — Either forward or reverse reading can be accommodated by reversing the reader's drive shaft. When reading, either forward or reverse, the read cycle precedes the feed cycle. Contact timing is plotted on the opposite page.

Tape Pull — During tape transport, forces adequate to damage a "stuck" Mylar tape can be generated. Tight-tape contacts on associated slack arms should be provided.

Tape Spooling — When desired, an extension of the sprocket shaft through the reader's rear cover will accommodate a small pulley to drive small pickup reels.

Tape Slewing — A lever arm can be provided to disengage the detent of the drive sprocket. Tape then may be pulled, or slewed, over the freewheeling sprocket at speeds up to 150 inches per second. The lever is designed for actuation from a control solenoid supported from the reader-motor mount. Either the tape slew lever or the sprocket extention (for tape spooling) can be provided. Both features cannot be provided on a single reader head. WARNING: The maximum slew speed must be controlled below the rating of the character counter for readers so equipped.

Operating Environment — Readers suitable for operation at any angular position are grease lubricated. Such readers are available for operation at speeds up to 30 cps in thermal environments from −20°F to +160°F. Splash oil-bath lubricated readers should be operated within 30 degrees of their normal operating plane. Such readers are available for operation at speeds up to 60 cps and at temperatures as low as −65°F.

Shock and Vibration — 20 G impulses as well as 20 G vibration to 50 cycles.

Weight — Single readers, FR-2L, 2½ lbs.

Tape Life — A free hanging loop of common paper tape could be read at least 200 times in the discontinued 100 cps latch readers, or at least 500 times in present production 60 cps readers, before encountering tape damage adequate to introduce reading errors.

Panel Mounting — Panel mounts are available as described on pages 58 and 59 "Reader Panels." A shock mounted assembly is available for use with the FR-2L Latch Readers as illustrated on page 52 (see Geneva-Clutch Reader Panel Mounting specifications).

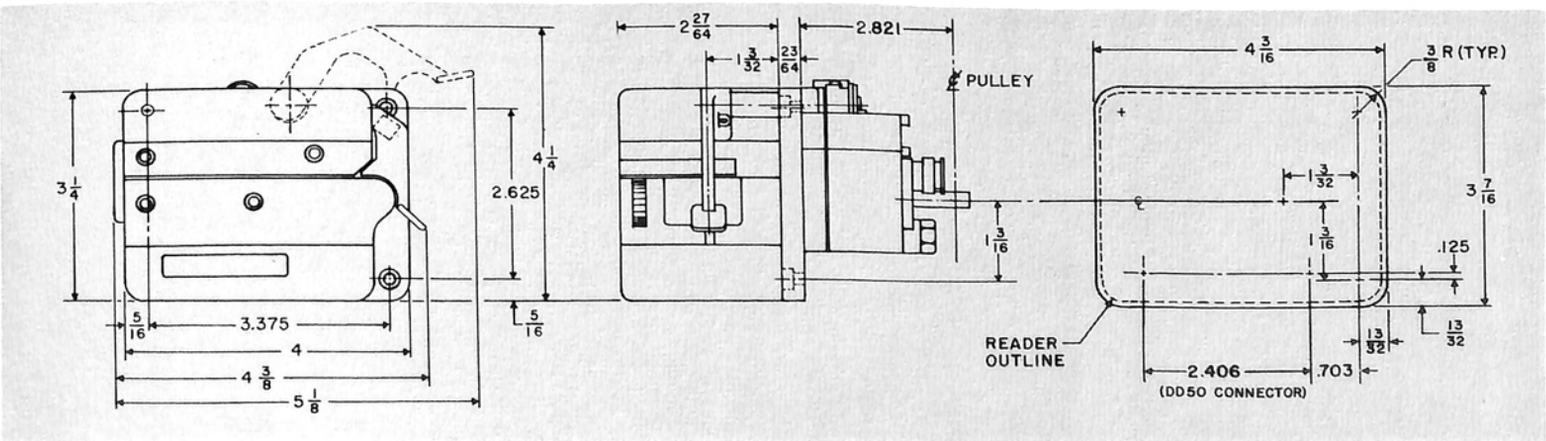

FR-2L OUTLINE DIMENSIONS

READER PANELS

A variety of reader panels have been produced for use with the Soroban reader heads. Since volume has not developed for a specific panel design, reader panels continue to be manufactured on a pilot production basis. Prices are quoted on special units to satisfy unique customer requirements. Typical panels produced to date are pictured here.

While selecting a tape-reader for a specific application, the unique advantages of each must be carefully weighed. Briefly, the Soroban Heads pictured on the accompanying panels may be grouped as follows:

The FRA high-speed, contactless, almost indestructible, reader permits reading of all existing punched medias; transparent or opaque, fully perforated or chadless tapes at rates up to 300 characters per second, character-by-character. Heads adhering to severe MIL specifications are available.

The FR-410S solenoid driven readers for operation up to 20 characters per second, character-by-character, employ contacts operated by sensing pins for sensing fully perforated tapes (chadless reading available on custom order). The plug-in assembly with its self-contained drive provides a compactness unachieved heretofore. The relatively silent **FR-410M** Geneva-Clutch Reader, for continuous reading at speeds up to 30 characters per second, handles tape more gently than almost any other available tape reader. A tape life of up to 10,000 passes for a free-hanging loop of paper is not uncommon. Contacts operated by sensing pins permit reading of fully perforated tapes (chadless reading available on custom order).

The Militarized FR-2L is provided for character-by-character, or continuous reading at speeds up to 60 characters per second. When driven at the same speed as a Geneva-Clutch Reader, comparable mechanical noise and tape life are usually realized. Contacts operated by sensing pins are provided for reading fully perforated tapes. The synchronous nature of its drive requires the access time to the first read character to be variable from a fraction, to more than one read cycle.

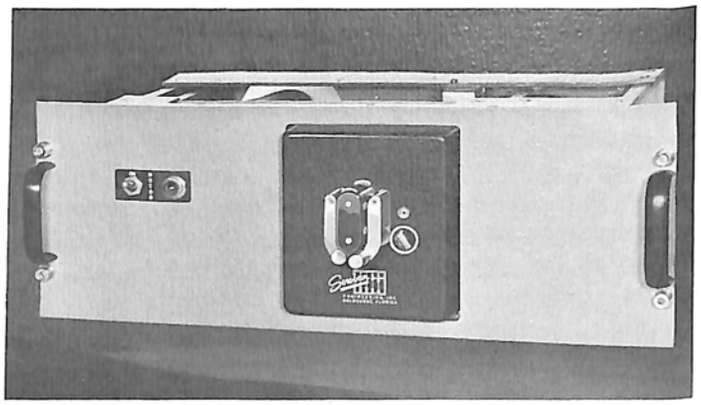

MODEL FRA-1
300 cps Reader & Panel

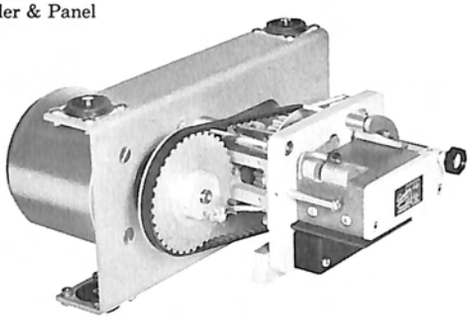

MODEL RM-410
30 cps Reader Mount Assembly

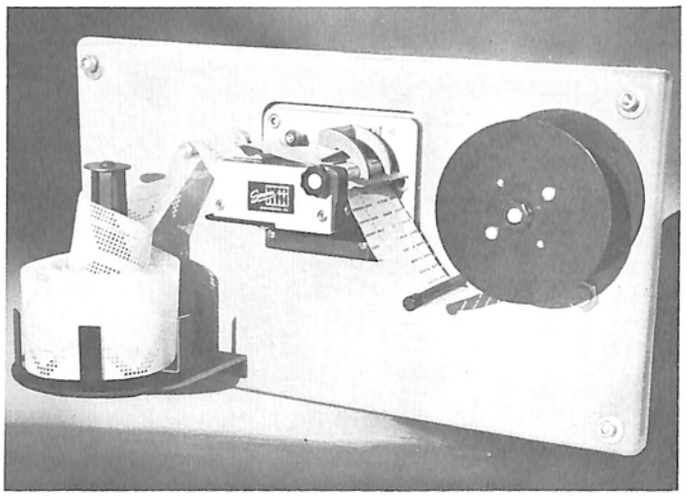

MODEL EA-50M*
30 cps Wide-Tape Reader & Panel

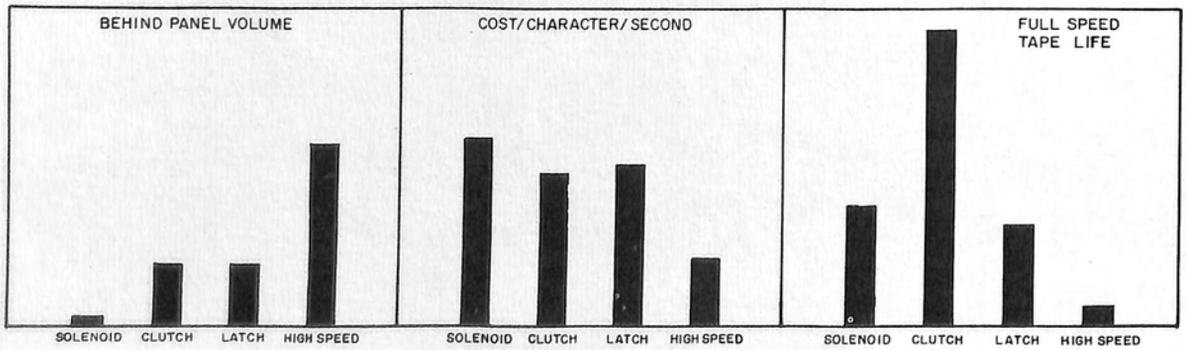

READER PANELS

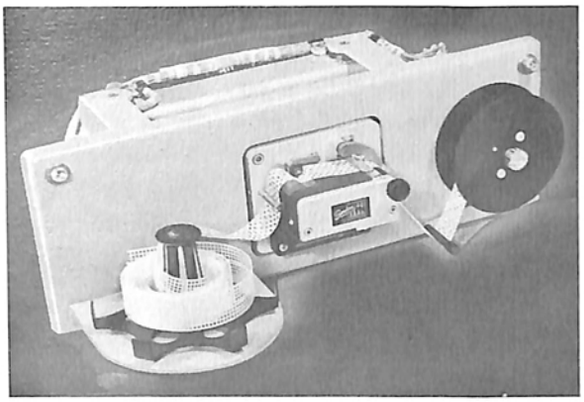

MODEL EA-10M*
30 cps Clutch-Reader & Panel

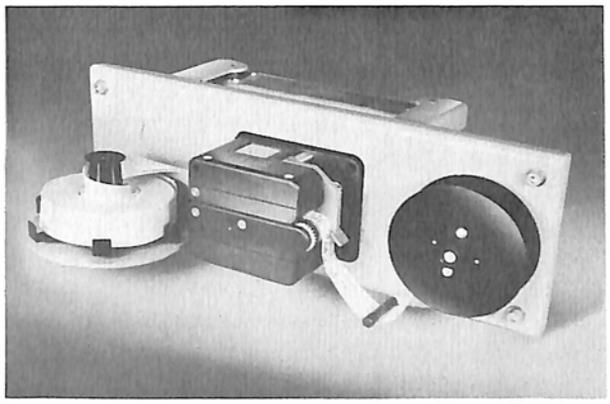

MODEL EA-2L
60 cps Latch Reader & Panel

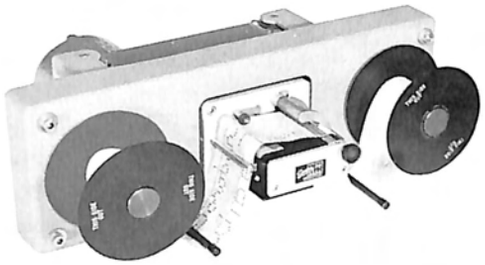

MODEL SC-50M*
30 cps Wide-Tape Clutch-Reader & Panel

MODEL SC-2L
60 cps Latch-Reader & Panel

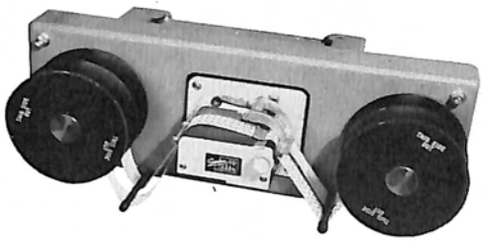

MODEL SC-50M*
30 cps Dual-Tape Clutch-Reader & Panel

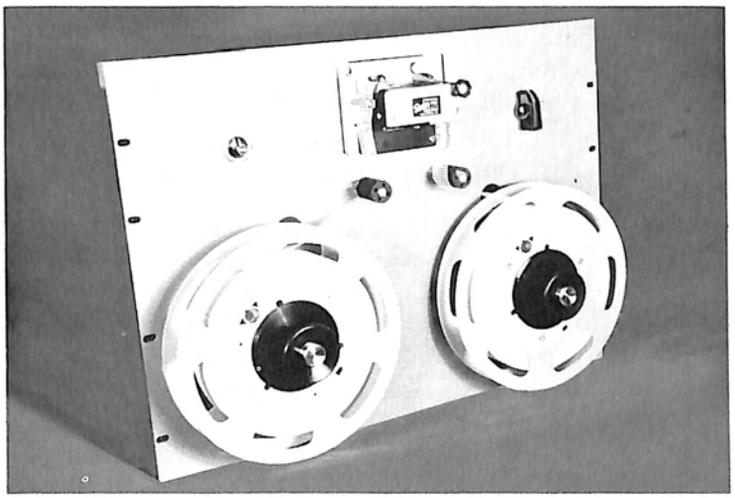

MODEL PH-10M*
30 cps Clutch-Reader & Panel

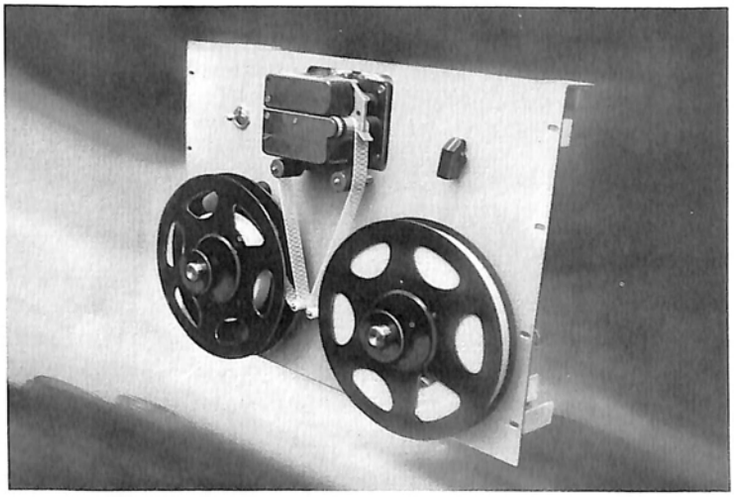

MODEL PH-2L
60 cps Latch-Reader & Panel

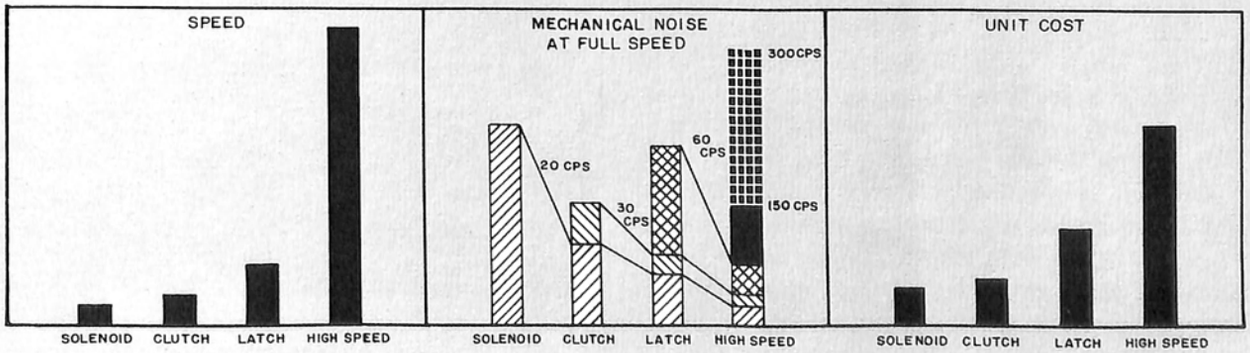

***NOTE:** When Panels are equipped with Solenoid Readers, the suffix M is replaced with an S, and the operate speeds are reduced from a maximum of 30 cps to 15 to 20 cps.

TAPE COMPARATORS

Automation and data processing centers are finding an increasing need for machines which will first reproduce tapes, and then compare the reproductions against the master to insure that accurate copies have been made. To accommodate these needs, Soroban has produced a variety of tape reperforator and comparator equipments. The Model CR-1 and CR-2 Tape Comparators, which were designed for low-speed tape comparison, are intended to complement the reperforating keyboard punches described on pages 62 and 63 of this catalog. The need for high-speed tape reproduction is filled by the 150 code per second Model REP Reperforator (and REPC Reperforator-Comparator) described herein on pages 60 and 61.

All of the Soroban comparators read and compare two tapes in synchronism, character - by - character. Detection of a discrepancy between the tapes terminates tape comparison; the equipments halt, and an alarm indicates to an attending operator the presence of an error. When tape reading is terminated, the non-identical pair of codes are just visible emerging from beneath the tape hold-down.

The Soroban Comparators have been designed to operate reliably with a wide variety of tapes. Thus, information recorded in thin lubricated communication tapes can be compared with information recorded in both transparent or opaque plastic tapes, as well as in dry papers and parchments. Standard Tape Comparators are available for use with either 5, 6, 7, or 8 level tapes.

DUAL READER COMPARATOR (CR-1)—The most simple and rugged Tape Comparator, the Model CR-1, is designed to use the new and improved Model FR-450M Dual-Tape Geneva-Clutch Reader. In this equipment, two tapes are transported and compared for identity as though they were a single wide tape. Identity of all recorded codes is required, including comparison of "feed" and "delete" codes. Any detected discrepancy automatically inhibits further tape advance, as well as signals the presence of an error through an "error indicator" light.

TWIN READER COMPARATOR (CR-2)—The use of two separate tape readers in a tape comparator permits automatic advance of one or both tapes over deleted, or other equivalent discarded codes. The Model CR-2 Twin Reader Tape Comparator's operation may be easily explained by designating the two readers as Nos. 1 and 2, and the tapes read by them as tapes #1 and #2 respectively. Tapes from which delete and tape-feed codes have been eliminated may be checked against a tape containing such codes by placing the original in reader #1 and the copy in #2. The CR-2 compares the two tapes until dissimilar codes are encountered. If the code in tape #1 is a discard code, the advance of tape #2 is inhibited until tape #1 has advanced past the dissimilar discard codes, at which time tape comparison again resumes, character-by-character. By comparison, if tape #2 contains more discarded codes than tape #1, comparison is inhibited and the *error indicator* lights. The standard production CR-2 is designed to recognize and advance tape #1 over two specific discard codes; i.e. a "tape feed" code consisting only of sprocket hole punchings, and a "tape delete" consisting of punchings in all tape levels. Custom twin reader comparators can be economically provided to recognize other discard codes, as well as advance either or both readers over specified discard codes. Although standard CR-2 Comparators accommodate tapes of from 5 to 8 levels, special models, designated CR-2W are also available for use with two 16 level wide tapes.

TAPE COMPARISON CIRCUITS—The accompanying schematic illustrates the use of the Soroban Model FR-450M Geneva-Clutch Reader for tape comparison in the Model CR-1 Tape Comparator. As indicated, the reader no-tape contact (RTC) is used to interlock the reader's operation by requiring the reader to complete its cycle, and then stop, whenever RTC opens. Reader control relay (RCR), which has a holding path through contacts on error relay (ER), the stop switch, and Reader Tape Contact (RTC), is energized when the start button is depressed. As soon as the start switch is released, power is applied to the reader clutch magnet through contacts on RCR and ER.

Since the reader contacts transfer before the reader's common contact (RCC) operates, RCC's application of power to the comparison circuit advances the tape to the next code as long as the two codes compare.

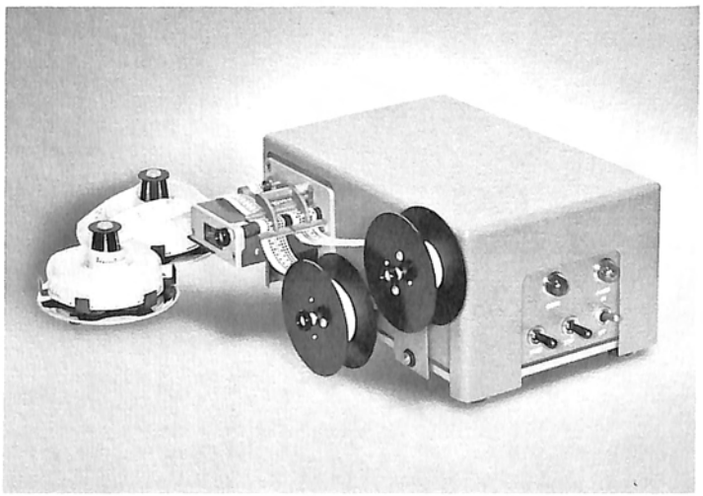

CR-1 TAPE COMPARATOR

Relay ER is actuated to release RCR if the two codes do not compare. With ER energized, removal of drive from the reader clutch solenoid inhibits further tape advance. Error indication is provided by a light wired across ER's coil. Operation of the start switch interrupts ER's holding circuit and permits comparison to recommence.

It should be noted that single-shot tape comparison is provided by holding the stop switch depressed and successively actuating the start switch. With the stop switch depressed, the holding circuit of RCR is transferred to the normally closed side of RCC. But one code is read each time the start switch is depressed since RCR drops off, de-energizing the clutch magnet, as soon as the reader's cam shaft operates RCC. If an error had been detected, ER would be energized through the start-switch holding-path.

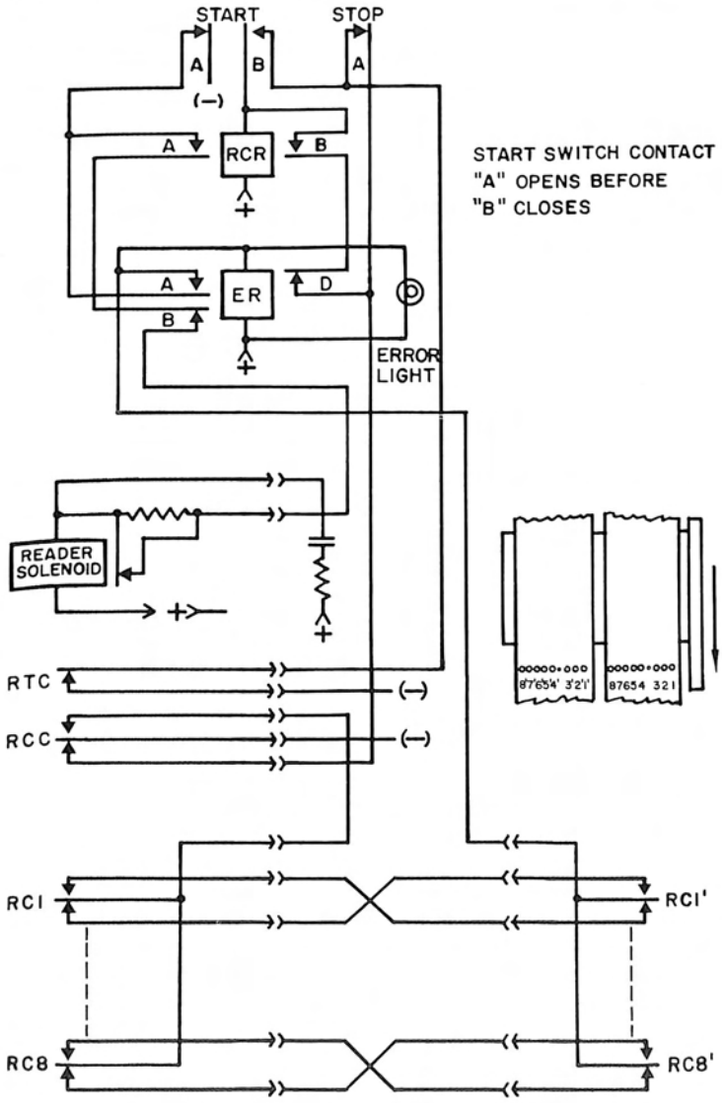

SCHEMATIC OF CR-1 COMPARATOR

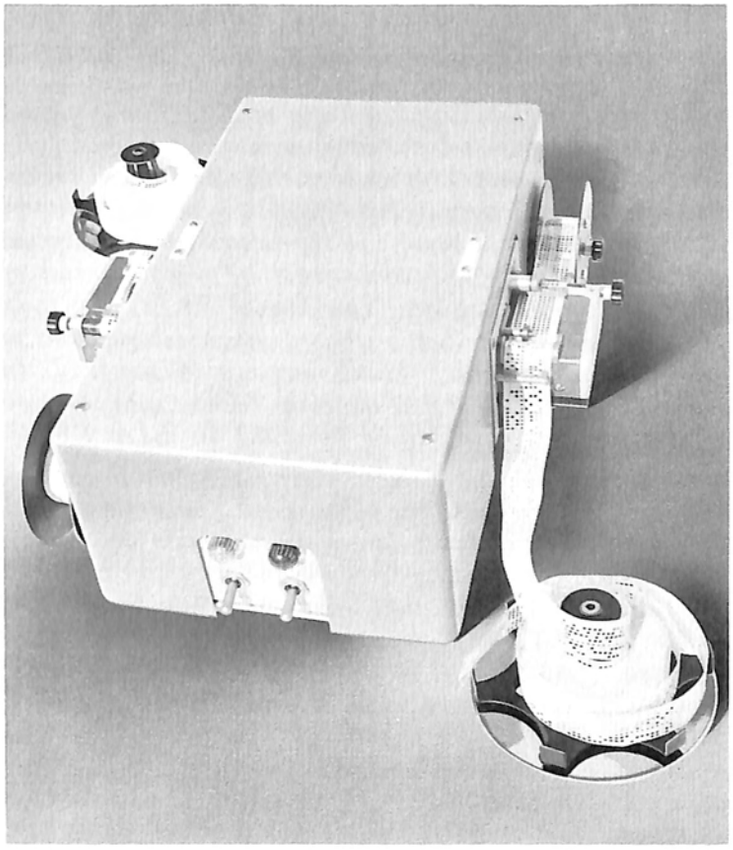

CR-2 TAPE COMPARATOR

CR-1 AND CR-2 SPECIFICATIONS

	CR-1	CR-2
Reader Design	Model FR-450M motor clutch driven dual tape reader.	Two Model FR-410S Solenoid driven single tape readers.
Comparison Speed	25 - 30 codes per second.	18 - 20 codes per second.
Tape Characteristics	Models are available for 5, 6, 7, or 8 level tapes.	Models are available for 5, 6, 7, or 8 level tapes. Special models are available for 16 level wide tapes.
Error Indication	Tape advance is inhibited and an indicator lights.	Tape advance is inhibited and an indicator lights.
Mechanical Noise	Practically silent.	Appreciable.
Power Requirement	115 VAC, 60 cycle.	115 VAC, 60 cycle.
Mounting	Table Top.	Table Top.
Feed Reels	Two Table Top center feed supply reels, 200′ capacity.	Two Table Top center feed supply reels, 200′ capacity.
Take-Up Reels	Two center feed type take-up, mounted to unit, 200′ capacity.	Two center feed type take-up, mounted to unit, 200′ capacity.

150 CPS TAPE REPRODUCER

The Soroban Model REP and REPC Tape Reproducers represent the first major advance which permits volume reproduction of perforated tapes. The equipments accommodate original tapes of all existing grades of plastic and paper, both transparent and opaque, fully perforated or chadless; producing fully perforated reproductions in all commercially usable grades of paper, plastic, or metallic tapes. Tape reproduction is performed at 150 codes per second, corresponding to a tape velocity of 15 inches per second. The Model REPC not only accommodates reproduction, but permits comparison of the reproduction with the master prior to spooling. In both the REP and REPC, the reproduced tapes are held to tolerances excelling those specified in EIA RS227.

Both the Model REP and REPC reproducers (or reperforators) use the high-speed contactless reading head described on pages 42 through 45 of this catalog. Plug-in reading heads similar to that pictured on page 45 are mounted upon the housing of the Model LP-2 Tape Perforator pictured and described on pages 6 through 9. In the resultant tape reproduction head, the master tape is routed past a sensing head affixed to the punch's die plate support. The master tape then contacts the reproduction and the pair are transported in unison by the punch's feed sprocket. Since but 90 degrees of wrap angle is permitted around the feed sprocket in place of the normal 180 degree wrap, half the normal number of sprocket teeth engage the master during tape transport. Thus, for maximum master tape life, operation is restricted to 150 codes per second. It should be mentioned that, when processed by the REPC tape reproducing head, tape life's measured in thousands of passes are obtained from pure Mylar masters, or several dozen passes from paper masters.

Two additional contactless anemometer sensing heads are mounted below the punch head to permit the master and its reproduction to be compared for identity, character-by-character, as they leave the vicinity of the punch head. In the event a comparison error is detected, further reproduction is inhibited. The non-conforming pair of codes are just visible in the comparison station. The tape comparison reading heads are close enough to the sprocket to permit accurate comparison of a reproduction against a master of poor registration. The size and spacing tolerances of the master tape's punched data may fall well below EIA Specification RS227 without adversely affecting the performance of the REPC (RS227 specifies an accumulated error in feed of $\pm 0.009''$ across spans of from 0.9 inches to 6 inches of punched tape).

The master and its identical reproduction are picked up by spoolers which exert a tension of approximately 6 ounces on the tape during reeling. The specified tape tension requires that while spooling, tape pickup be onto flange equipped reels.

The REP tape reproduction systems make use of a horizontal tape supply system capable of accepting 16 inch diameter rolls of paper tape (i.e. approximately 4,000 ft. rolls of standard .004 inch thick paper). Because of the density of Mylar, the tape supply system will accommodate rolls of Mylar no larger than 2,000 ft. The tape supply system is maintained completely behind the plane of the front panel until the supply tape emerges from the horizontal slot at its right extremity.

As pictured, the REPC is equipped with two reel hubs above the reproduction head. A pair of spooled tapes may be placed thereon, with the tape from the reels passed to the left of the punch's die-plate support, over the sprocket, and across the tape comparison heads. Thus, the REPC can accommodate either tape reproduction with concurrent tape comparison, or tape comparison of existing tapes without tape reproduction. The upper hubs are equipped with provisions for tape rewind.

Air supply for the three anemometer sensing heads is provided by an auxiliary pump, integral to its drive motor. A solenoid operated valve provides for full pressure cleaning of heads whenever the tape depressor is elevated for loading. It should be noted that each of the three reading heads use amplifier circuits identical to those described on pages 42 through 45.

TAPE PREPARATION AND REPRODUCTION — For ease in production, original master tapes are first prepared in paper with key punches as described on pages 62 and 63. During initial tape preparation, a first tape is always produced. In some installations, a second tape is then produced from a simple keypunch, and compared for identity with the first (see pages 58 and 59 for Tape Comparators). In other installations, the first tape is verified with a verifying key punch wherein manual key entries are compared for identity with the first tape. Only when the key entry corresponds to the recorded data is data automatically recorded in a second tape. When disagreements exist, the operator must decide whether the original tape was correct, or in error.

Ultimately, a number of short tape lengths are produced. The short lengths are combined to produce a longer tape either by splicing, or more commonly, by reperforating a master paper tape with the low-speed reperforating or verifying key punches described on pages 62 and 63. The low-speed Reperforators eliminate discard codes from the reproduced copy

(discard codes usually include delete and feed codes). When a series of short lengths of tape are reperforated to produce a full length paper master, the full length master ultimately is compared with the short lengths, either manually or with the Model CR-2 or CR-1 Tape Comparators (pages 58 and 59). When a full length paper master finally has been produced, Soroban recommends that a working master and a file copy of pure Mylar be produced on the REPC. The use of pure Mylar is recommended over other media since it is relatively inexpensive and will prove to be relatively industructible.

During the steps outlined, Elmers Glue as produced by Bordens generally will prove adequate for splicing paper tapes, and Goodyear's Pliobond for splicing Mylar tapes.

HIGH SPEED TAPE REPRODUCER SPECIFICATIONS

Equipment Designation	Model REP reproduces a master tape at 150 codes per second (nominal). Model REPC reproduces a tape and compares the reproduction for identity with the master at 150 codes per second (nominal).
Code Characteristics	5, 6, 7, or 8 hole tapes.
Feed Spacing and Hole Tolerances	Output of punch will be held to size and spacing tolerances improved over Electronic Industries Association Standard RS227. Accurate reproduction of data recorded in master tapes of all standard media, as well as master tapes punched with hole size and spacing tolerances exceeding the limitation of EIA RS227.
Size	Self-contained console approximately. 2½ ft. x 2½ ft. x 5½ ft. high.
Circuitry	Solid State Throughout.
Reliability	1000 hours MTBF.
Power	1 KVA 115 volts, 60 cycle.
Weight	600 lbs.

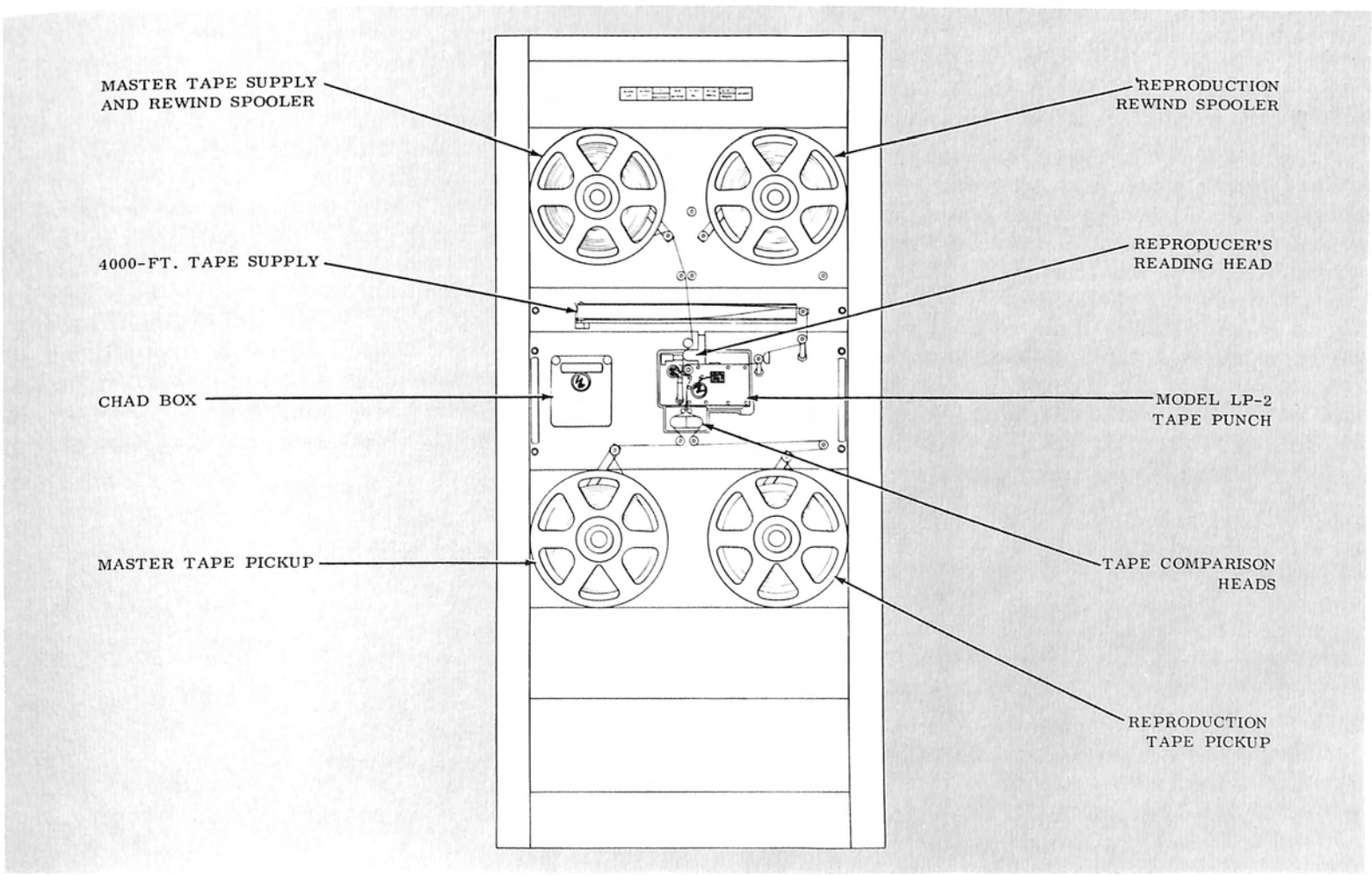

MODEL REPC TAPE REPRODUCER

TAPE KEY PUNCHES

Although key punching of data into tape has only recently received widespread consideration as the economical replacement for card punching, general standards have not yet been proposed which permit production of universally acceptable tape key punches. All users continue to desire custom equipments tailored to their specific application. Thus, the only production key punches inventoried by Soroban consist of Bi-Hexadecimal or Bi-Octal equipments, as well as Identification Keyboard Punches.

A general trend is developing for Key Punches wherein a single manual entry into a keyboard produces a single recorded character. This trend permits inventorying of a standard prewired harness for Soroban's key punch cabinets. The two basic prewired cabinet assemblies accept keyboards of all sizes to permit both prompt delivery as well as publication of fixed prices for most custom key punches.

To satisfy the need for economical production of other unique equipments, production of both desk top and desk console mechanical assemblies has been standardized. The assemblies contain mountings for control relays and switches, keyboards with various length frames, low-speed tape readers and punches, etc. During recent years, these mechanical assemblies have permitted production of nearly a hundred different key-punch equipments wherein premium engineering charges were only applicable to the custom design of associated circuitry.

When planning the use of key punches in office applications, it should be noted that organizations such as Soroban are only able to accommodate the needs of original equipment manufacturers (OEM's), or groups who retain servicing personnel within their own organizations. It is not feasible for a relatively young organization to establish a nation - wide consumer servicing organization, available on call, day or night, in your local community. Obviously schooling can be, and is provided, to train both OEM and consumer-account service-personnel whenever desired.

The low-speed tape preparation-reproduction standard products manufactured by Soroban are intended for desk-top operation. Such equipments include the simple Model FKP Key Punches, the Model RKP Reperforating Key Punches, and the Model FCP Verifying Key Punches, all of which are available to accept single entry data, or Bi-Hexadecimal, or Bi-Octal coding of data.

Bi-Hex or Bi-Octal Coding requires two successive key entries into either a 16 key (Bi-Hex) or 8 key (Bi-Octal) Keyboard to produce a single recorded code in the tape. A register is provided which permits indicator lights to display the binary equivalent of the first manual key entry. Concurrent with the first key entry, an additional light illuminates to permit recognition of a "O" digit entry. Recording of the full code occurs simultaneously with entry of the second digit.

KEY PUNCHES, MODEL FKP—The simplest complete tape preparation device manufactured by Soroban consists of a Coding Keyboard and a Paper-Tape Perforator. The equipment permits direct recording of digital data in punched tape from manual keyboard key entries.

REPERFORATING KEY PUNCHES, MODEL RKP — Addition of a tape reader and associated controls to the Model FKP Key Punch provides an equipment capable of both preparing tape from manual key entries and reproducing or "Reperforating" tapes. During reperforation, tape reproduction may be interrupted for manual insertion of corrections. Control switches are provided which permit single character advance until a desired tape location has been reached (i.e. single shot advance). Correction data then may be inserted into the new tape by manual entry into the reperforating punch's keyboard.

VERIFYING PUNCHES, MODEL FCP — Addition of appropriate controlling circuits to the reperforating Key Punch provides a device capable of tape verification as well as tape preparation and reproduction. During verification, actuation of the keyboard produces a signal which initiates reading of one character from the punched tape reader. Recognition of agreement between codes supplied by the reader and those produced by the keyboard produces a pulse to automatically release the keyboard locking mechanism and permit transmission of the verified code to the punch for recording. When disagreement occurs, the Keyboard is maintained in a locked condition and information transmittal is inhibited. Further, as an immediate indication to the operator, the key which had been depressed is restrained in the fully depressed

FCP VERIFYING PUNCH, BI-HEXADECIMAL

condition. If the information in the keyboard is correct, operation of an override switch permits transfer of the keyboard's digit to the punch. If incorrect, another button releases the keyboard permitting the operator to try again.

IDENTIFICATION KEYBOARD PUNCHES, MODEL FKP-IDENT — These Key Punches are intended to facilitate identification of tape leaders. The alphanumeric keyboard automatically sequences the punch through a number of recording cycles to produce a hole pattern displaying the symbol engraved upon the associated key button, as in the leader tape at the top of this page. The FKP-IDENT can be provided for identification of 5, 6, 7, or 8 hole tapes. However, in each, but 5 of the available code channels are used to display the recorded characters. The RKP-IDENT, is a reperforating identification keyboard punch which is capable of producing a tape leader and then reproducing an existing tape. An output connector is provided on both the FKP and the RKP-IDENT equipments to permit an auxiliary keyboard to record a single unique code from each manual key entry.

AVAILABLE INVENTORY ITEMS — Special racks and panels are available from inventory, as are console desks containing slide hardware equipped drawers which support tape readers, perforators and associated control relays. Such inventories of mechanical parts facilitate prompt production of equipments tailored to specific needs. Although most tape preparation equipments are quoted on request, the tape preparation equipment listed below are inventory items, available at published prices:

MODEL RKP BI-HEXADECIMAL REPERFORATING KEY PUNCH
MODEL FCP BI-HEXADECIMAL VERIFYING KEY PUNCH
MODEL FKP-IDENT KEYBOARD PUNCH (44 Key Keyboard)
MODEL RKP-IDENT REPERFORATING PUNCH

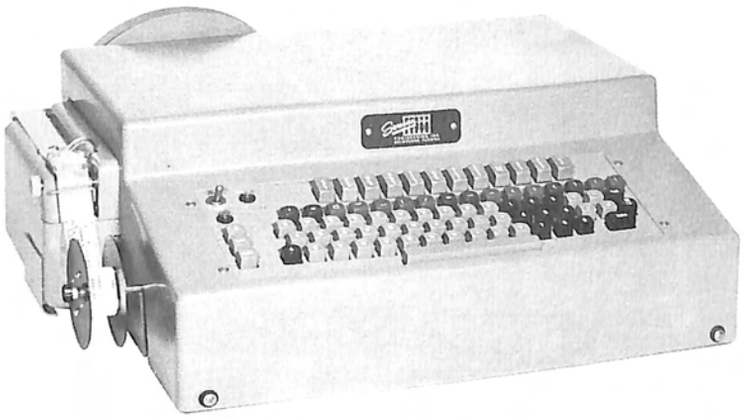

CUSTOM KEY PUNCH

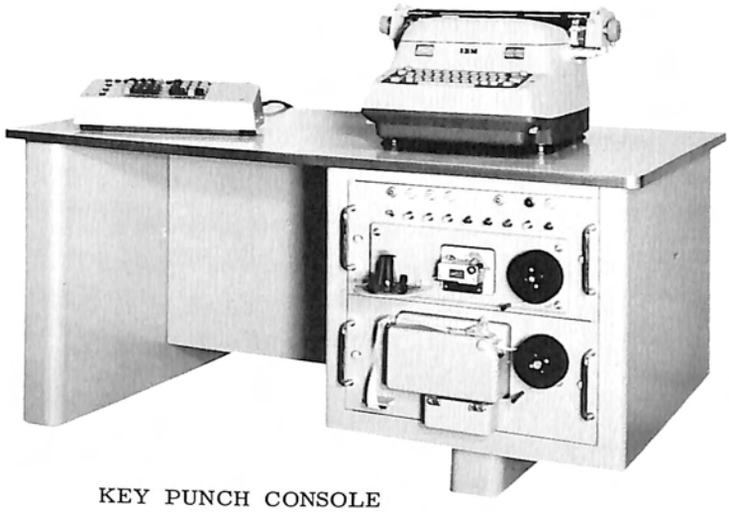

KEY PUNCH CONSOLE

FKP, RKP and FCP SPECIFICATIONS

Keyboard Styles	FK-2S (21 keys or less). FK-2M (22 to 44 keys). FK-2L (45 to 64 keys).
Reader	Model FR-410M Tape Reader (no reader with FKP).
Perforator	Motor driven low-speed Friden perforator.
Tape Widths	11/16", 7/8", and 1" (2-1/8" on special order) for standard 5, 6, 7, and 8 hole recording.
Tape Handling	1,000 ft. roll supply for perforator, 200 ft. take-up (center-feed type) for reader and perforator. 200 ft. table-top center-feed supply for reader (no reader on FKP).
Power Required	115 VAC, 60 cycle, 2 amp.
Available Coding	Specified by customer.
Speed	Preparation of tape: Limited by operator speed. Duplication of tape: Nominal 10 character per second (not on FKP). Verification of tape: Limited by operator speed (not on FKP or RKP).
Entry Modes	Available with single key entry for standard or special binary codes, or dual key entry for Bi-Hex or Bi-Octal codes.

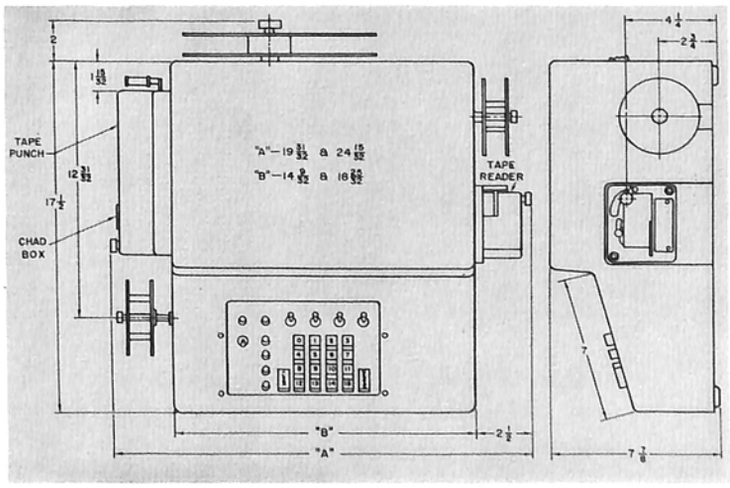

STANDARD FKP, RKP, AND FCP OUTLINE DIMENSIONS

CUSTOM SYSTEMS

Soroban welcomes the opportunity to provide custom equipments tailored for integration into our customers product line. The accompanying illustrations display component assemblies incorporated into both commercial equipments as well as military systems. The equipments are built exclusively for, and marketed exclusively by, the indicated customer. If you have a specialized need for an equipment using Keyboards, Punches, Readers, or Printers, let Soroban provide a package engineered to your exact needs.

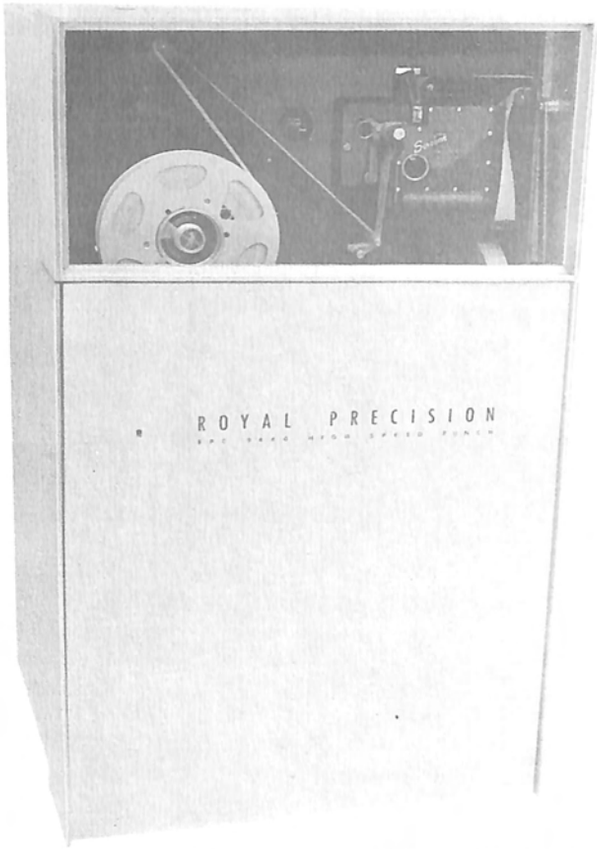

The RPC 9440 "High - Speed Tape Punch" contains a custom 300 character per second Soroban Model GP - 2 Tape Perforator and Panel Assembly. The RPC 9440 is intended for heavy-duty service with the RPC 4000 Computer marketed by General Precision, Inc.

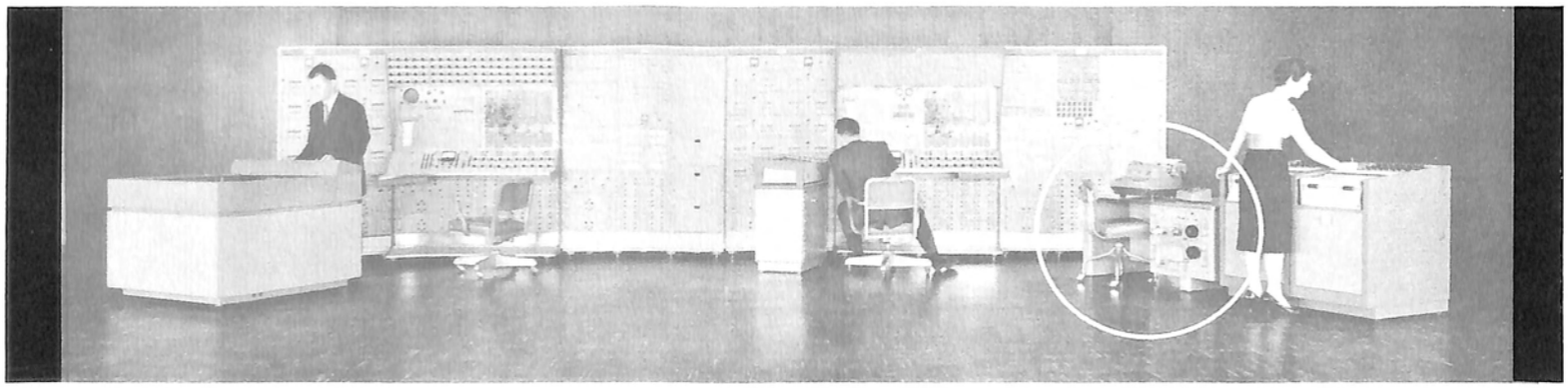

The ADIOS, circled in the photo, is an "Automatic Digital Input-Output System" produced for Electronic Associates, Inc., Long Branch, New Jersey, for integration into their PACE 231R analog computer line. A comparable Satellite Console which also uses a Soroban Computeriter, Keyboard, and Tape Reader is pictured on page 63. The ADIOS not only permits automatic tabulation of test data, but also permits potentiometer ratios to be automatically set from data prerecorded in punched tape.

The versatile "Programmed Data Processor-1" (PDP-1) manufactured by Digital Equipment Corporation, Maynard, Massachusetts is representative of one of many commercial computing equipments which make use of Custom Computeriters for data tabulation.

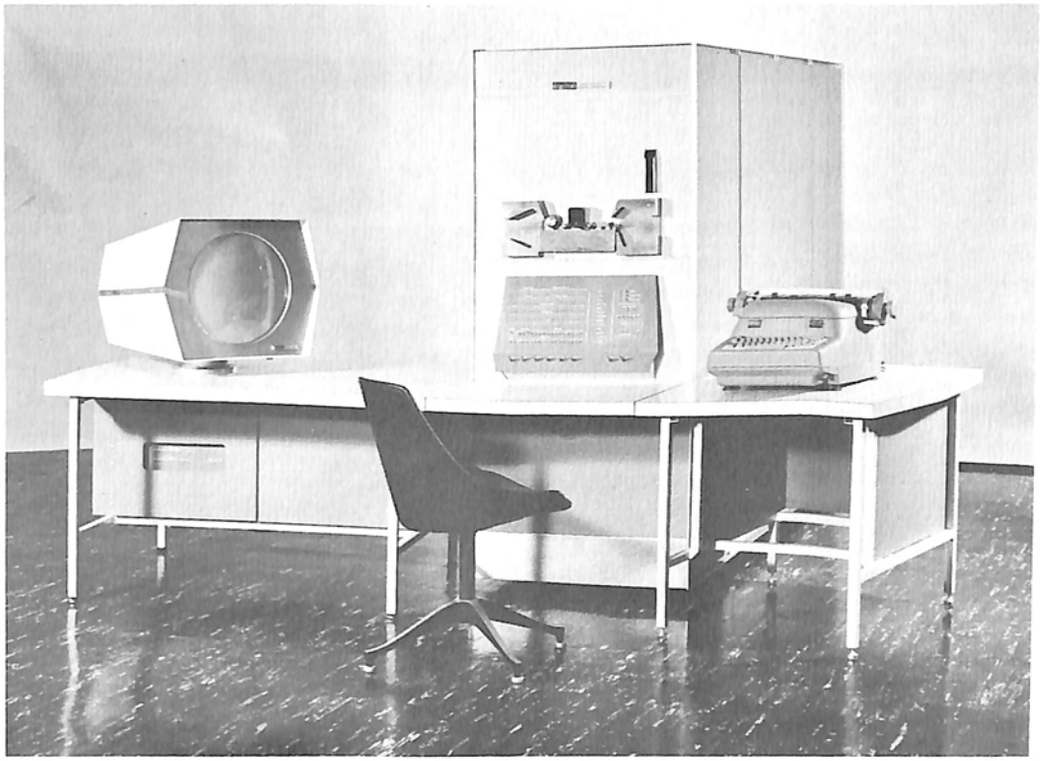

The "Optical Scanner," Model 1P4P, as manufactured by Farrington Electronics, Inc., Alexandria, Virginia is representative of an equipment which can make use of the full 300 character per second capability of the Soroban Model GP-2 Tape Perforator.

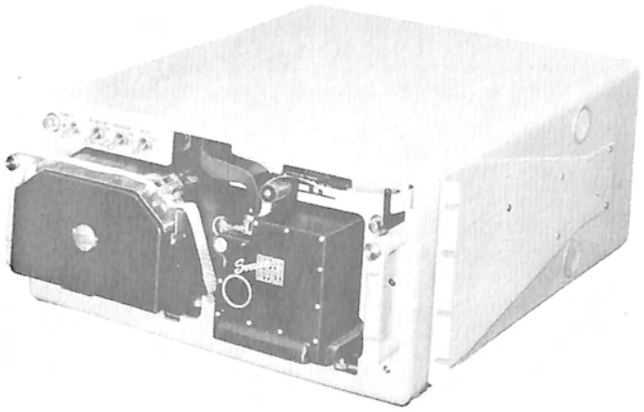

The Soroban Model GP-2, packaged in a military enclosure, is intended for use in a high-speed to low-speed tape conversion system. The unit pictured here, designated TT268U/G, records data in tape at 240 cps. The tape then feeds a low-speed communications tape reader.

Soroban Wide Tape

During recent years, the availability of 16 level wide tapes has been a boon to both systems and equipment designers, particularly those engaged in process control. As systems have become more complex, an increasing need has developed for tape readers capable of sensing more than 8 tape levels. The need was first proven in 1954, when Soroban introduced their first dual-tape readers; readers wherein two 5, 6, 7, or 8 level tapes were read as though they were a single wide tape. The availability of such readers ultimately led to the production of tape-preparation devices wherein hole patterns equivalent to those in the dual tapes were recorded in a single wide tape. Since wide tape readers were described on pages 46 through 52, as well as on pages 56 and 57, this section is devoted to recording in wide tape.

The pride of Soroban's wide tape recording equipments is the Model WP-2 sixteen level punch. The latter uses punch bails, magnets, armatures, and interposers interchangeable with those which have proven so reliable in the 300 characters per second Model GP-2 Punch. Punch and die assemblies containing similar materials and tolerances are employed. The design is such that reliable recording of data in all practical grades of plastic or paper can be achieved at speeds up to 60 codes per second.

Since instrumentation data can be recorded at higher speeds in standard 5 to 8 hole tapes, the recording of such data in the new 16-hole wide-tape media cannot be justified. Thus, the only available market for 16 level punches has been in the preparation of control tapes. Model-shop production of punches has proven more than adequate to satisfy the needs of this limited market. Records indicate that but one or two 16-level punches is required to satisfy the tape preparation-reproduction requirements for 100 or more readers. With the small available market coupled with its model-shop production, marketing of the WP-2 requires assessment of premium manufacturing charges.

The most common wide-tape-preparation equipment is a quad-hexadecimal key-punch wherein four successive key entries into a 16-key keyboard produces a single 16 level recorded code in the tape. A register is provided which permits indicator lights to display the binary equivalent of the first three key entries. Concurrently, an additional light per key entry is illuminated to permit recognition of "O" digit entries. Recording of the full sixteen-bit code occurs simultaneously with entry of the fourth digit.

Although the simple octal tape-preparation unit pictured here is desk-top mounted, subsequent deliveries of the quad-hex units make use of relay rack panel assemblies. In addition to the Quad-Hex Model RKP tape preparation units, the Soroban Model 1228 wide-tape reproducer-comparator is now available. The Model 1228 occupies approximately 38½ inches of standard 19 inch wide panel space. The unit reproduces a master tape in paper or Mylar at 30 codes per second, concurrently comparing the master and copy for identity, character-by-character. Two Geneva-Clutch Model FR-450M Tape Readers are employed in the Comparator, while a single Model FR-450G is geared directly to the WP-2 in the tape reproducer portion. Tape is spooled onto 200 foot capacity center-feed tape pickup reels.

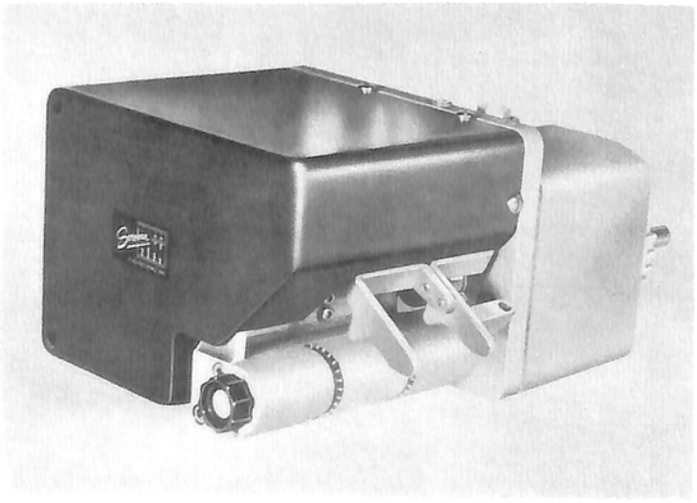

WP-2 WIDE-TAPE OR DUAL-TAPE PUNCH HEAD

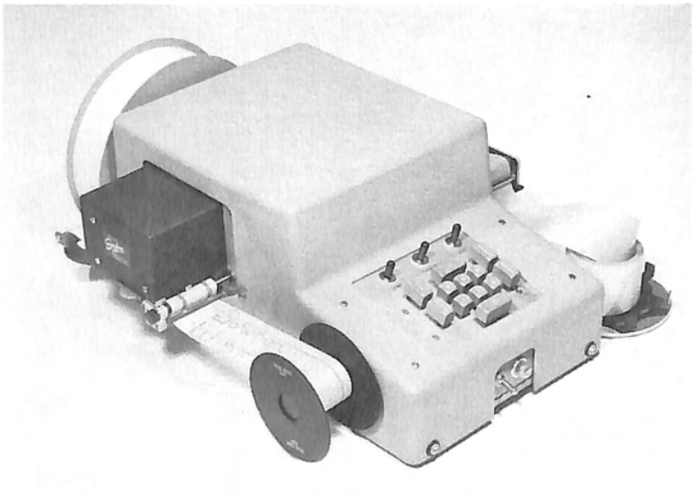

RKP WIDE-TAPE REPERFORATING KEY PUNCH

MASTER TAPE GAGE (Model TG-1)—The Soroban Master Tape Gage is a precision device which provides a simple and accurate means for determining whether perforations in a tape conform to established dimensional tolerances. The 18-inch long gage contains a column of indexing pins which positively position the tape from its sprocket holes for measurement. Means are then provided for accurately measuring (a) the distance from the tape's edge to the sprocket holes, (b) the accumulated error in tape feed, (c) the lateral spacing of holes, as well as (d) the squareness of the transverse hole pattern with respect to the direction of tape feed.

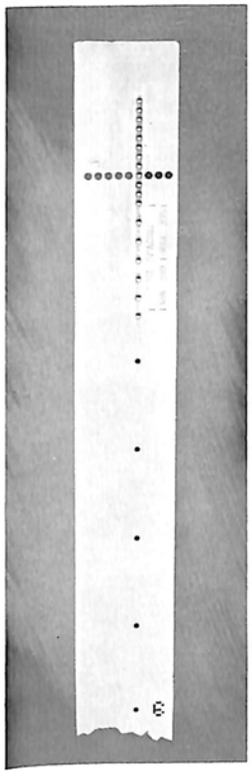

The accuracy of the gage results from the extreme sensitivity of the eye to differential measurements. To create a differential display, the gage is designed to show an annular ring when tape is viewed through the countersunk tape gaging holes; the radius of gaging holes being 0.005 inches larger than a tape hole. Since the edge of a tape code or feed hole mispositioned by 0.005 inches will disappear behind the edge of the gaging hole, distances smaller than the 0.005 inch wide annular ring can be accurately estimated. Feed error measurements can be easily made to almost any desired precision since the feed gaging holes are positioned every inch along the full length of the 18-inch gage. For example, tape having a progressive feed hole error of ±.005 inches in 6 inches of punched tape would appear grossly out of register at the last feed gaging station (i.e. the 18th hole). One edge of the tape would project 0.017 inches, or cover approximately 20% of the last gaging hole. Feed tolerances from less than .005 inches to as much as .045 inches in 2 inches of tape (measured by the first gaging hole), to .005 inches or less in 18 inches of tape can be measured by use of the appropriate gaging holes and estimating the misalignment of the tape hole being gaged with respect to the gaging hole.

The tape's reference edge to its feed hole dimension is checked by sighting along two beveled gaging edges separate by 0.006 inches. One edge permits measurement of the maximum value specified in EIA RS227, the other to the minimum tolerance. Good tape will be visible beyond the minimum edge and be hidden by the maximum edge. The gage is manufactured to check edge guiding of 0.392 ± 0.003 inches.

To insure that the code holes are positioned at right angles with respect to a center line through the feed holes, as well as check lateral hole spacings, outboard code gaging holes are provided to again produce 0.005 inch annular tape gaging rings.

PRESSURE OILER NO. A-200 — Nozzle fits the oil filler holes of the Soroban Models GP-2, LP-2, PT-1, LP-1, LP-2, EP-4, etc., punch heads. Soroban No. 0 punch oil is recommended for use in all punch heads.

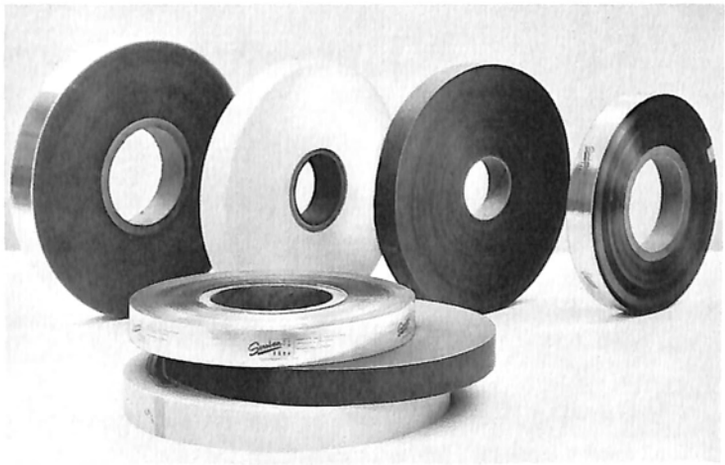

MYLAR AND PAPER TAPES — Both 0.004 inch thick yellow lubricated paper and 0.0025 inch thick Mylar-Aluminum-Mylar laminated tape, 10-25-10, are maintained in inventory in nominal 800 foot rolls, 11/16", 7/8",, 1", and 2⅛" in width.

"T" HANDLE WRENCH NO. A-100 — Fits the 10-32 socket head cap screws which are used extensively throughout Soroban equipments for mounting reader and punch heads, power-cam assemblies, etc.

HEX AND SPLINE KEY WRENCH Set No. 8205 — Contains both Allen an Spline key wrenches which fit the screw sockets encountered in Soroban equipments.

ORDERING QUESTIONNAIRE

MODEL LP-2 and GP-2 PERFORATORS

1. Perforator to be Model GP-2. / Model LP-2.

2. Punch to be operated at a nominal speed of 300 / 150 characters per second (see Page 18).

   If other, specify .....

3. From the hole patterns indicated inside catalog's rear cover, tape is to be produced in Style .....

   containing ..... levels of recording.
   (For example, standard Teletype 5-hole tape would be indicated as "Style I Tape, 5 level".)

4. Cooling air is to exhaust / intake at the front of the punch (GP-2 only). Note: If fanfold tape is to be used, see comments on page 16.

5. Punch motor is to be operated from 115V 60 / 220V 50 cycle power.

   If other, specify .....

6. A Standard Induction / Special Synchronous motor drive is required (see GP-2-300 comments, page 18).

7. A punch with / without supporting panels, tape supply and tape pickup is required.

8. For panel mounted assemblies, tape pickup is to be onto NAB hubbed single flange / double flange reels.

   If others, specify and provide reel drawings and sample reel .....

9. Panel mounted punches are / are not to be provided with power-on switches and indicator lights and are / are not to be provided with tape feed push-button switches.

10. Panel mounted punches are to be provided with standard 1,000 / special 5,000 ft. capacity tape supply device (see page 19).

11. Panels are to be painted Soroban Grey / Customer's special paint. If special paint is required, customer must furnish primer, finish coat, and texture fluid where applicable, plus specifications for paint application.

12. Logic and schematic diagrams of punch control circuits will / will not be forwarded to Soroban Engineering, Inc., Customer Engineering Dept., for technical review.

Customer .....

Date

Address .....

Street State

Questionnaire completed by .....

Tel. No. & Ext.

Return to: Sales Engineering, Soroban Engineering, Inc., Box 1717, Melbourne, Florida

COMPUTERITER QUESTIONNAIRE

1. Computeriter to be Model EC ET ETC (see page 34).

2. Typewriter keyboard to be 42 key / 44 key 02 Billing as indicated below.
   If other, please submit keyboard layout.

3. Carriage width to be standard 12″. If other, specify . . . . . (see page 38).

4. Type style to be standard Pica for alphabet and Regent Gothic for numerals. If other, specify . . . . . .

   Note: The tops and bottoms of printed numerical symbols in Regent Gothic are in alignment, as opposed to the vertical misalignment inherent in Pica type.

5. Pitch (characters per inch) to be standard 10 per inch. If other, specify . . . . . .

6. Ratchet (lines per inch) to be standard 6 per inch. If other, specify . . . . . .

7. Motor to be standard 115V 60 cycle. If other, specify . . . . . .

8. Color to be standard Dove Grey with matching grey key buttons. If other, specify . . . . . .

9. Platen to be standard platen / pin-feed platen with hole-to-hole dimension of . . . . . (see page 38).

10. Decoder solenoids for 12, 24 - 28, 48, and 90 volts operation are available from stock. (Other voltages can be provided on special order.) Desired operating voltage is . . . . . volts.

11. Coding — Please complete coding chart on reverse side.

12. If additional special features are required such as special type slugs, auto format, contacts, keyboard ball interlocks, etc., please indicate . . . . . .

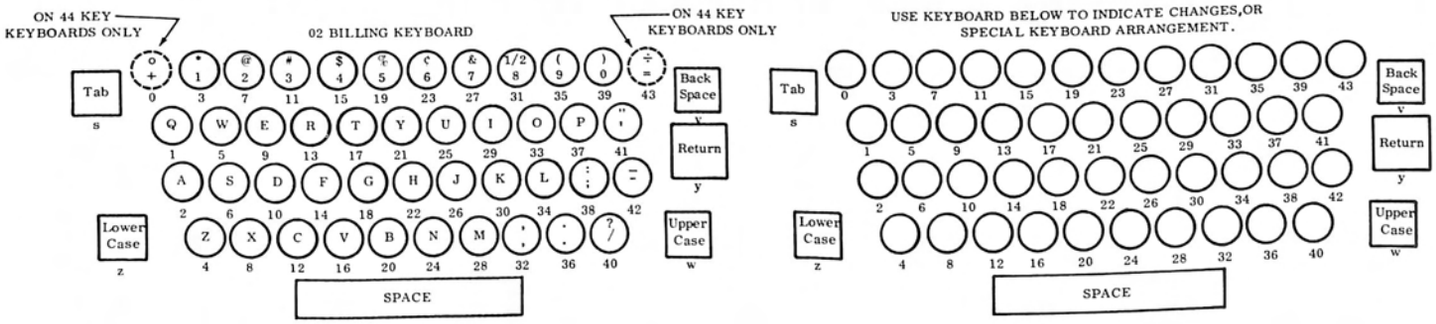

Company . . . . . Date

Address . . . . . Street State

Computeriter Design by . . . . . Tel. No. & Ext.

Return to: Sales Engineering, Soroban Engineering, Inc., Box 1717, Melbourne, Florida

COMPUTERITER QUESTIONNAIRE

DECODER CODE								TYPEWRITER					CODER								
								STANDARD 02 BILLING		SPECIAL TYPEWRITER		KEY POS.	CODE								AUXILIARY CONTACTS (See e, p. 37)
8	7	6	5	4	3	2	1	LOWER	UPPER	LOWER	UPPER		8	7	6	5	4	3	2	1	
								TAB				S	SINGLE CONTACT CLOSURE								
								SPACE				T	SINGLE CONTACT CLOSURE								
								+	°			0									
								q	Q			1									
								a	A			2									
								1	*			3									
								z	Z			4									
								w	W			5									
								s	S			6									
								2	@			7									
								x	X			8									
								e	E			9									
								d	D			10									
								3	#			11									
								c	C			12									
								r	R			13									
								f	F			14									
								4	$			15									
								v	V			16									
								t	T			17									
								g	G			18									
								5	%			19									
								b	B			20									
								y	Y			21									
								h	H			22									
								6	¢			23									
								n	N			24									
								u	U			25									
								j	J			26									
								7	&			27									
								m	M			28									
								i	I			29									
								k	K			30									
								8	½			31									
								,	,			32									
								o	O			33									
								l	L			34									
								9	(			35									
								.	.			36									
								p	P			37									
								;	:			38									
								0	)			39									
								/	?			40									
								'	"			41									
								-	_			42									
								=	+			43									
								BACK SPACE				V	SINGLE CONTACT CLOSURE								
								UPPER CASE				W	SINGLE CONTACT CLOSURE								
								CARRIAGE RETURN				Y	SINGLE CONTACT CLOSURE								
								LOWER CASE				Z	SINGLE CONTACT CLOSURE								

CODING KEYBOARD QUESTIONNAIRE

1. Keyboard Layout: Desired Keyboard Layout should be sketched below.
   Number of Keys: Size A.....; B.....; C.....

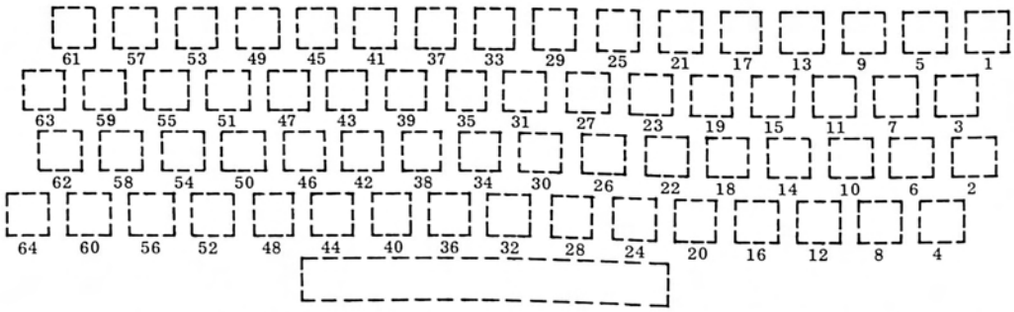

NOTE: Start layout from right-hand end of keyboard. Space bar, if included, will be centered on portion of keyboard used.

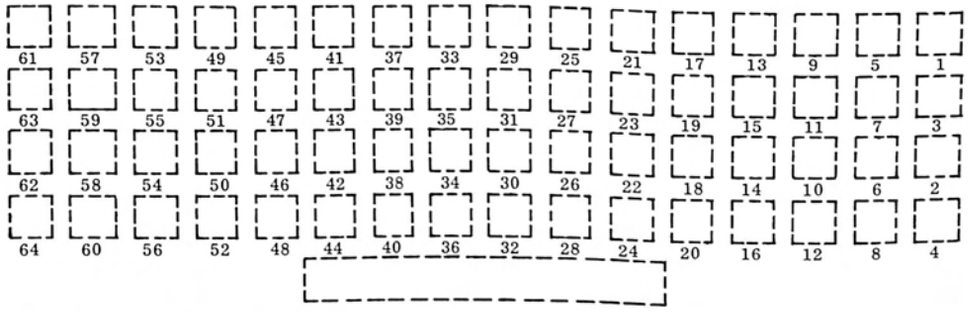

Note: Keys are on ¾-inch center spacing.

Size		*Colors Available*
A	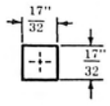	Grey, Dark Red, Green, Black, Yellow, Brown, Dark Blue, Orange, Ivory, White
B	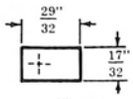	Grey, Black
C	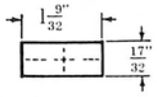	Grey, Black
Space Bar		Grey, Dark Blue, Black, White

2. A power switch and indicator light is / is not required.
3. Code contacts are required to be a single Form A / Form C contact per code level.
4. Operating voltages of 6, 12, 24 - 28, 48, and 90 volts DC are available from stock. Other voltages on request. Specify operating voltage.....
5. Keyboard output to be feedback controlled. / fixed width pulse (15 ± 5 ms).
6. Keyboard to be mounted in portable case. / panel mounted in your console.
7. Keyboard case and/or panel to be painted Soroban Grey. / Special color.
   (If special color is required, customer must furnish paint, complete with painting and baking instructions.)
8. Keyboard to be supplied with Cannon Type D / Special male connector.
   If special connector, specify.....

Return to: Sales Engineering, Soroban Engineering, Inc., Box 1717, Melbourne, Florida

CODING KEYBOARD QUESTIONNAIRE

KEY				KEYBOARD CODING							
NO.	ENGRAVING	SIZE	COLOR	8	7	6	5	4	3	2	1
1											
2											
3											
4											
5											
6											
7											
8											
9											
10											
11											
12											
13											
14											
15											
16											
17											
18											
19											
20											
21											
22											
23											
24											
25											
26											
27											
28											
29											
30											
31											
32											

KEY				KEYBOARD CODING							
NO.	ENGRAVING	SIZE	COLOR	8	7	6	5	4	3	2	1
33											
34											
35											
36											
37											
38											
39											
40											
41											
42											
43											
44											
45											
46											
47											
48											
49											
50											
51											
52											
53											
54											
55											
56											
57											
58											
59											
60											
61											
62											
63											
64											

Customer . . . . . .
Date

Address . . . . . .
Street State

Keyboard Designed by . . . . . .
Tel. No. & Ext.

Soroban ENGINEERING, INC.
BOX 1717/MELBOURNE/FLORIDA

QUALITY DATA PROCESSING DEVICES AND SYSTEMS
TELEPHONE 723-7221 CODE 305 / P. O. BOX 1717 / MELBOURNE, FLORIDA

PRODUCTS PRICE LIST

		PRICE
PERFORATORS		
GP-2-300P	Super-Speed Tape Perforator including motor drive and tape handlers, up to 300 characters per second operation, 5 to 8 level, Panel Mount.	$ 9,400.00
LP-2-150P	Low-Speed Tape Perforator including motor drive and tape handlers, up to 150 characters per second operation, 5 to 8 level, Panel Mount.	4,800.00
LP-2-DESK	Low-Speed Tape Perforator including motor drive, tape supply, up to 150 characters per second operation, 5 to 8 level, Desk-Top Mount.	3,800.00
PT-1	Low-Speed Tape Perforator with serial print station, with drive motor, 100 characters per second operation, panel mounted, less circuits and tape handlers.	$ 9,800.00
GP-2	Super-Speed Tape Perforator Head only, up to 300 characters per second operation, 5 to 8 level.	7,900.00
LP-2	Low-Speed Tape Perforator Head only, up to 150 characters per second operation, 5 to 8 level.	3,200.00
GP-2S	Special Super-Speed Tape Perforator equipped with echo-checking pickups, drive motor, tape handling, without circuitry (up to 300 characters per second).	10,400.00
WP-2	16 level Tape Perforator (2⅛" wide tape) up to 60 characters per second.	3,900.00
PERFORATOR CONSOLES		
GP-2CON	Punch Console including model GP-2-300P, power supplies, punch magnet drive circuits and 2 stage buffer, mounted in special relay rack.	$13,050.00
LP-2CON	Punch Console including model LP-2-150P, power supplies, punch magnet drive circuits and 2 stage buffer, mounted in special relay rack.	7,850.00
PT-1CON	Printing-Perforator Console with circuits, power supplies, and PNS tape handling.	14,000.00
DATA TRANSMISSION SYSTEMS		
DTD-P	Receiver employing 300 character per second Model GP-2 Perforator.	$14,600.00
DTD-R	Transmitter employing 300 character per second Model FRA-1 Reader.	8,400.00
DTD-PR	Transceiver.	23,000.00
CARD PUNCHES		
EP-4	Card Punch, Head only.	To be announced
EP-4CON	Card Punch Console including Model EP-4 Punch, card handlers, drive circuits, power supplies.	To be announced
PRINTERS		
MT-1	Serial (character-by-character) Page Printer, up to 100 characters per second, complete with drive circuits.	To be announced
CT-1	Serial Columnar Tabulator, up to 100 characters per second, panel mounted, less circuits.	To be announced
COMPUTERITERS*		
EC	Electric typewriter equipped with coder for generation of coded electrical outputs.	$ 985.00
ET	Automatic Tabulator consisting of electric typewriter sequenced from coded electrical inputs.	1,560.00
ETC	Automatic Tabulator consisting of electrical typewriter equipped with both sequencer and coder units.	1,990.00

Soroban ENGINEERING, INC.
BOX 1717/MELBOURNE/FLORIDA

		PRICE
EC	Coder mechanism only (no typewriter).	$ 330.00
ET	Decoder mechanism only (no typewriter).	775.00

** All Computeriters subject to a non-recurring engineering charge of $170.00 for first unit of given type or design.*

The following optional features are available on Computeriters at additional cost: Pin-Feed Platens, Wide Carriages, Special Type, Special Keyboard Arrangements, etc.

KEYBOARDS*

FK-2S	Small Coding Keyboard of 21 keys or less.	$ 340.00
FK-2M	Medium Coding Keyboard of 22 to 44 keys.	590.00
FK-2L	Large Coding Keyboard of 45 to 64 keys.	815.00

** Custom features of individual keyboards require assessment of a non-recurring engineering charge of $170.00 for each new keyboard design or configuration.*

READERS

FRA-1	High-Speed Reader complete with drive motor, air system, amplifiers, feed controls, and power supplies, panel mounted, 5 to 8 level.	$ 3,950.00
FR-410S	Reader Head with solenoid drive 5 to 8 level.	740.00
FR-450S	Reader Head with solenoid drive, dual tape or 16 level.	1,050.00
FR-410M	Reader Head and clutch only, for motor drive, 5 to 8 level.	760.00
FR-450M	Reader Head and clutch only, for motor drive, dual tape or 16 level.	1,075.00
FR-410G	Reader Head only, for direct motor drive, 5 to 8 level.	590.00
FR-450G	Reader Head only, for direct motor drive, dual tape or 16 level.	905.00
FR-2L	Reader Head, latch control, for motor drive, Militarized, 5 to 8 level.	1,750.00

READER MOUNTING PANELS

Prices of reader mounting panels quoted on request.

TAPE COMPARATORS AND REPRODUCERS

CR-1	Tape Comparator using dual-motor clutch-driven reader	$ 1,345.00
CR-2	Tape Comparator using 2 single solenoid readers.	1,800.00
REP	Tape Reproducer, 150 characters per second, utilizes Model LP-2 Perforator, special console mount.	11,000.00
REPC	Tape Reproducer-Comparator, 150 characters per second, special console mount.	15,000.00

TAPE KEY PUNCHES

RKP-Bi-Hex	Reperforating Key Punch 5 to 8 level, desk-top unit.	$ 2,250.00
FCP-Bi-Hex	Verifying Key Punch, 5 to 8 level, desk-top unit.	2,525.00
FKP-IDENT	Identification Key Punch.	2,050.00
RKP-IDENT	Reperforating Identification Key Punch.	2,900.00

QUANTITY PRICES QUOTED ON REQUEST

THESE PRICES SUPERSEDE ALL PRICES PUBLISHED PRIOR TO DECEMBER 1, 1962

ALL PRICES SUBJECT TO CHANGE WITHOUT NOTICE

PUNCH TAPE STANDARDS

STANDARD HOLE PATTERNS

5, 7, and 8 level tape
(Tape Style I)

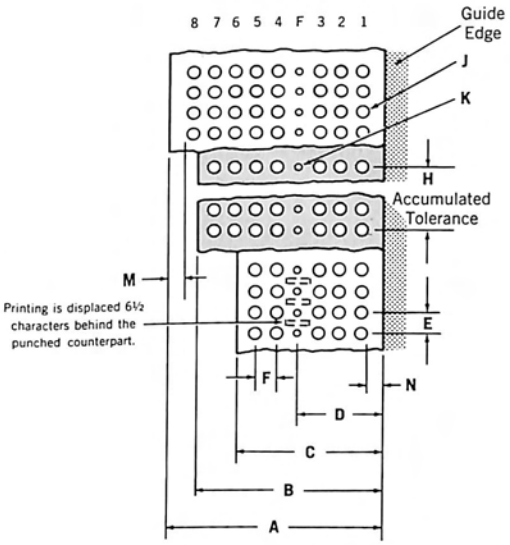

SPECIAL HOLE PATTERNS

Kleinschmidt (Inverted 5 level) Tape
(Tape Style II)

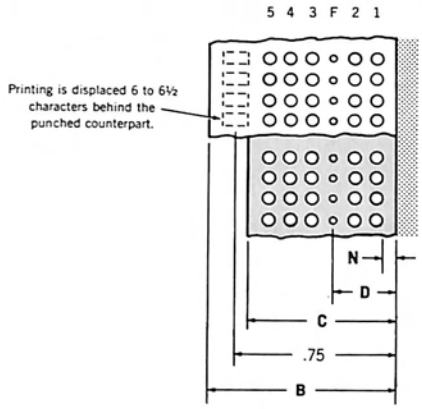

Western Union (Advanced Feed) Tape
(Tape Style III)

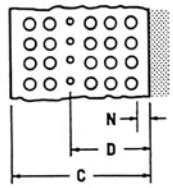

Teletypesetter (Advanced Feed) Tape
(Tape Style IV)

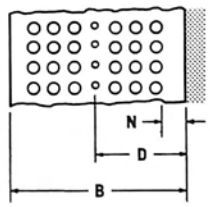

TAPE STYLE	TAPE DIMENSIONS (Inches)										
	A	B	C	D	E	F	H*	J	K	M	N
I**	1.000 ± .003	.875 ± .003	.687 ± .003	.392 ± .003	.100 ± .003	.100 ± .002	6.000 ± .009	.072 ± $^{.001}_{.002}$	.046 ± $^{.002}_{.001}$	.072–.047–.059	.056
II	------	.875	.686	.297 ± .002	.100	.100 ± .001	6.000 ± .016	.072 ± .0005	.047	.242–.053	.061
III***	------	------	.687	.387	.100	.100 ± .001	------	.072 ± $^{.0002}_{.0001}$	.0475 ± $^{.0002}_{.0000}$	.064	.051
IV***	------	.875 ± .003	------	.434 ± .002	.100	.100 ± .001	5.000 ± .007	.072 ± .001	.0476 ± .001	.105	.098

* Soroban Tape Punches maintain feed tolerance of 6.000±.005 inches for 60 punched characters.

** Dimensions presented correspond to EIA Proposed Standard RS-227 for 1 inch 8 level tape.

*** In tape with advanced feed, the leading edge of the sprocket hole is in line with the leading edges of the code holes.

In other tapes, the center line of the sprocket hole is on the center line of the code holes.

PUNCH CARD STANDARDS

Dimensions correspond to EIA Proposed Standard,
Engineering Committee TR 27.6.1 March 1962.

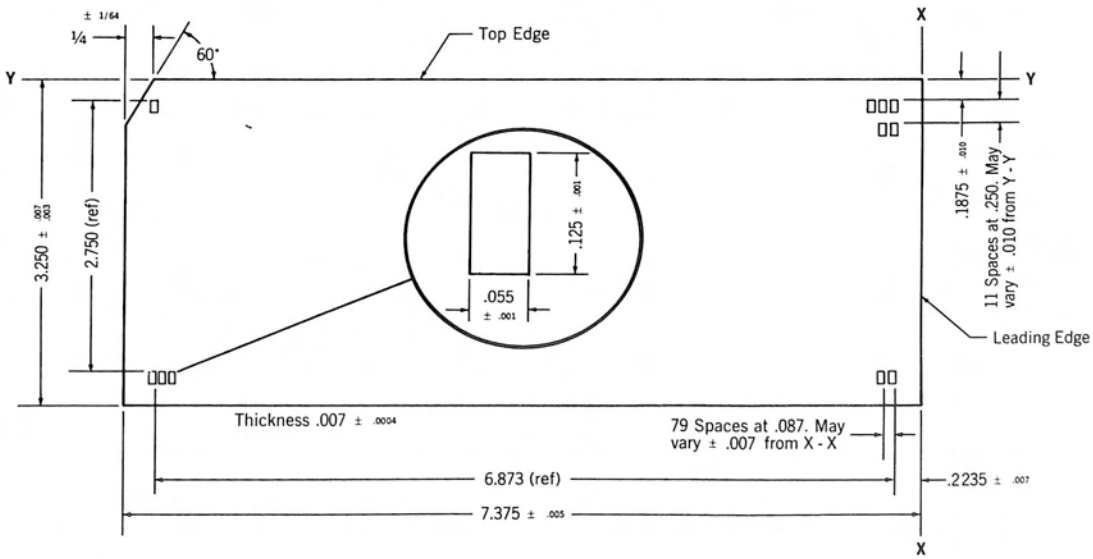

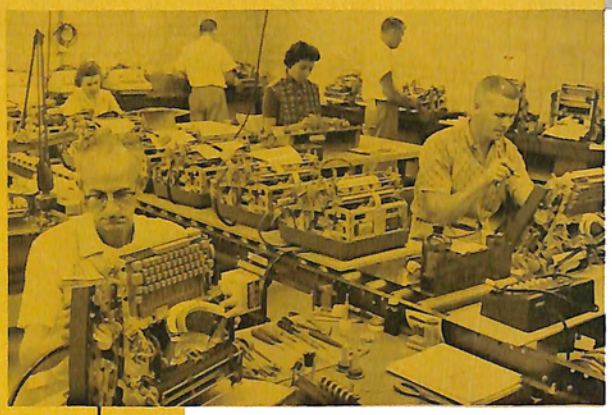

Soroban
ENGINEERING, INC.
BOX 1717/MELBOURNE/FLORIDA

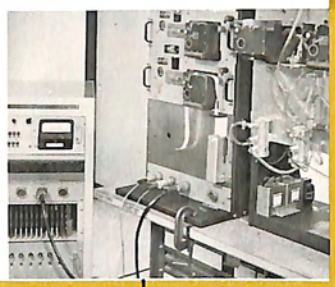

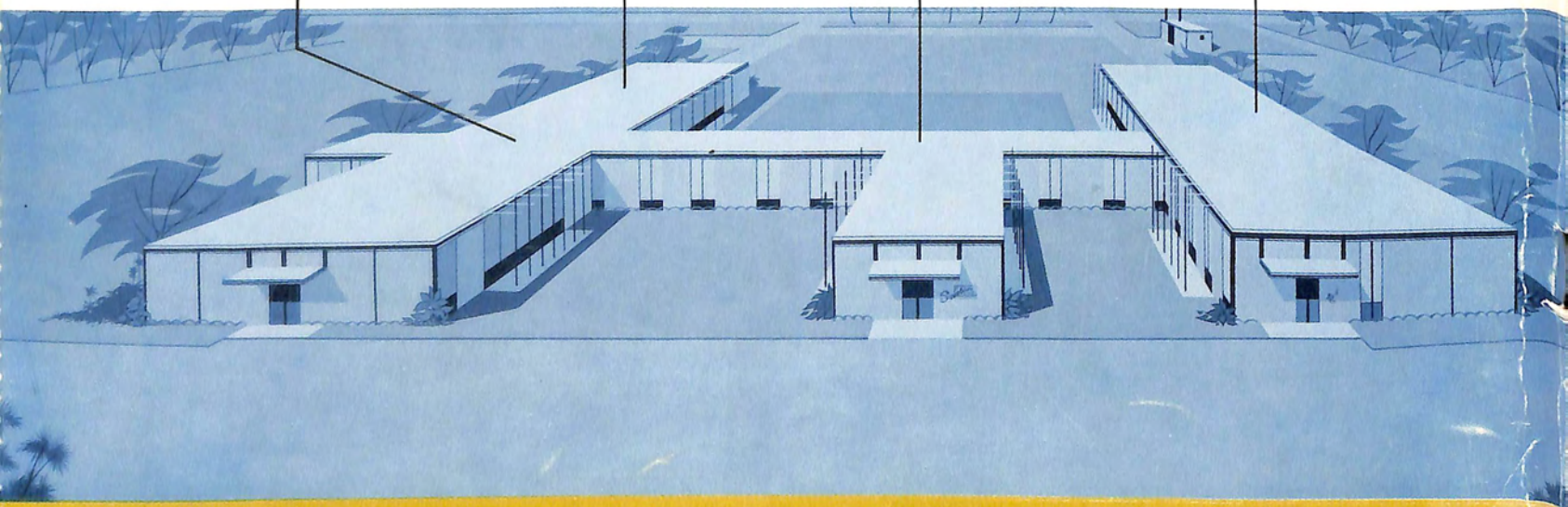

Soroban
ENGINEERING, INC.
BOX 1717 MELBOURNE FLORIDA

QUALITY DATA PROCESSING DEVICES AND SYSTEMS

TELEPHONE 723-7221 CODE 305 / P. O. BOX 1717 / MELBOURNE, FLORIDA