Text describing Automatic Frequency Control deleted.

Section V. STC, MTI, AND SWITCHER-MIXER

67. SENSITIVITY TIME CONTROL (STC) CHANNEL

a. General. The purpose of the STC channel is to reduce the gain of the receiver at close ranges so that all return signals will have a more nearly equal intensity. The STC chassis is located on the back of the acquisition control panel. It operates to produce a negative-going waveform that can be applied to the control grids of V3, V4, and V5 in the i-f preamplifier channel for selective control of the preamplifier channel gain during each transmitter cycle. Echoes at very close ranges tend to be very strong; and if they are not attenuated, a blossoming which interferes with target detection will occur around the center of the PPI.

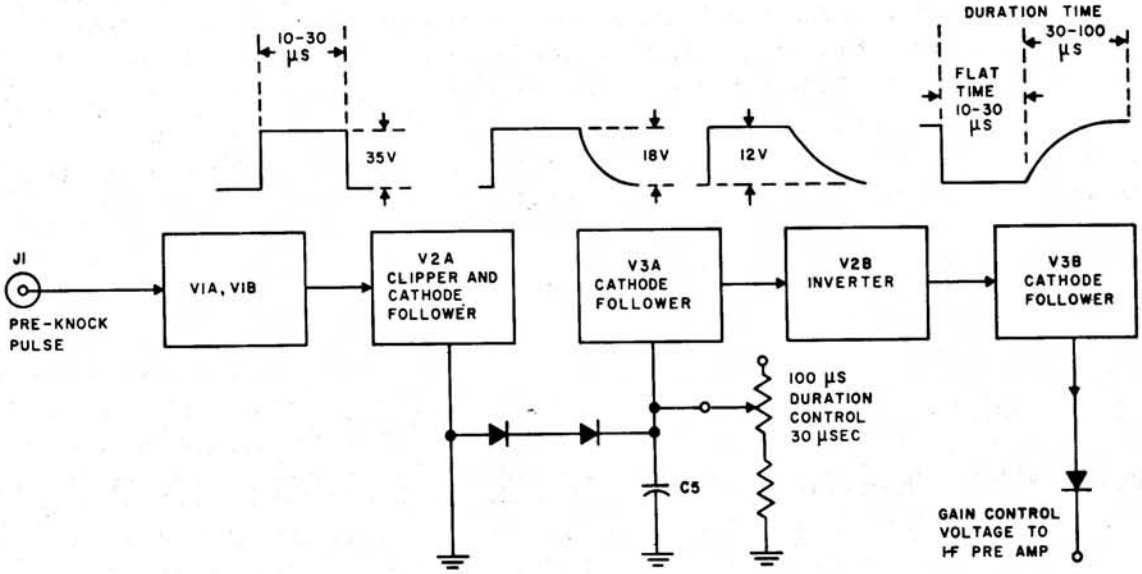

Figure 27. Sensitivy time control.

b. Multivibrator V1 operation (TM 9-5000-26, page 213). The sensitivity time control channel circuits are triggered by the positive preknock pulse, which enters the unit through jack J1. Dual triode V1 is a cathode-coupled, one-shot multivibrator. V1B is normally conducting because its grid is returned to +150 volts. The voltage developed across cathode resistor R5 is high enough to hold V1A cut off. When the preknock pulse is applied to the grid, the A-section is triggered into conduction. The plate voltage drop is applied through C3 to the grid of V1B, driving it toward cutoff. Cathode follower action causes the cathode to drop, reinforcing the increase of current through the A-section. This process reaches temporary equilibrium when the B-section is completely cut off and V1A reaches maximum conduction. The grid of V1B then begins to rise slowly toward +150 volts because of the exponential charging of C8 through resistor R9. When it rises just above cutoff, the B-section begins to conduct again. The cathode voltage also becomes more positive, reducing current flow through the first section. The consequent rise in plate voltage, coupled by C3, aids the rising grid voltage in V1B. V1B rapidly reverts to its pretrigger state of conduction. A positive, rectangular output pulse is taken from the junction of R7 and R8 in the plate circuit of V1B and applied to the grid of the next stage. The duration of the output pulse is variable between about 10 and 30 microseconds, the exact

duration being determined by the setting of potentiometer R2 (labeled FLAT). R2 sets the bias level of the grid of the first section. The bias governs the maximum excursion of the plate voltage; and hence, the potential to which the second-section grid drops, and finally, the time required for the grid to again reach cutoff. R2 is normally set to obtain a 24-microsecond output, which is the equivalent of approximately 4,000 yards.

c. V2 and V3A operation. The positive pulse output at the cathode of follower V2A rapidly charges capacitor C5 through crystals CR1 and CR4. When the pulse ends, however, the crystals prevent the discharge of C5 through the relatively low resistance of R11. Instead, C5 must discharge through R13 (labeled DURATION) and R14. The waveform at the grid of V3A has a steep front, a flat top for a time between 10 and 30 microseconds, and a sloping, trailing edge resulting from the decay of voltage at the top of C5. Potentiometer R13 can vary the time constant of the discharge path between about 12 and 1,000 microseconds. R13 is normally adjusted so that the trailing edge of the waveform extends for 92 microseconds or 15,000 yards. V3A is another cathode follower. Its output is applied to the V2B grid, which is clamped positively to -9 volts by crystal CR2. V2B is a low-gain amplifier with degenerative cathode feedback for preservation of the waveform. The plate load for this tube is the STC potentiometer R6, located on the receiver control unit chassis. Tube V2B cuts off at -15 volts. The -9v clampling level on the grid holds the tube slightly above cutoff.

d. V3B. The negative-going waveform from V2B is applied to cathode follower V3B. The grid of this tube is held at a high positive potential, about 30 volts, to insure linear reproduction of the entire waveform. The grid circuit, as in the case of the other cathode followers, contains a small series resistance for the suppression of transient parasitic oscillations. Crystal diode CR3 clamps the baseline of the output waveform to a d-c level that can be set to some value between 0 and -20 volts. The level is established by adjustment of GAIN control potentiometer R5, located on the acquisition control panel. The output of the sensitivity time control unit is a negative square wave with a sloping, trailing edge riding on the gain control voltage set by R5 in the receiver control unit. Thus, the gain control voltage is a composite signal.

68. MOVING TARGET INDICATOR SYSTEM

a. General. In order to designate a target to the radar operators it is first necessary to see the target on the PPI. If the target flies over an area in which clutter is present, the return from the clutter will frequently obscure the return from the target. Accurate target designation then becomes impossible. The purpose of the MTI system is to reduce the intensity of clutter on the PPI so that moving targets will be visible when they are in an area in which clutter

is present. Common causes of clutter are clouds, precipitation, and fixed targets such as hills, trees, and buildings. Clutter may also appear when enemy targets use certain types of countermeasures. Under these circumstances, the MTI system can assist in observation and accurate designation of targets which would be totally obscured without the MTI system.

b. Interference phenomena. A variety of colors can be seen on the edges of a very thin oil slick. This phenomenon arises from interference between light reflected from the upper surface and light reflected from the lower surface of the oil. Although the oil slick is much too thin to measure by ordinary means, its thickness is appreciable compared to the wavelength of light. The variations in colors on the oil slick indicate differences in its thickness. When a target is flying in the presence of clutter, the antenna receives echoes from the target and from the clutter. Interference occurs between these echoes just as interference occurs between light reflected from the two surfaces of the oil slik. The MTI uses this interference effect to determine whether the target is moving or stationary. The oil slick is too thin to measure with a ruler, but its thickness could be computed from the known wavelength of light. Similarly, it is quite difficult to measure directly that a target is moving. But by using the interference effect, it can be deduced that a target in the presence of clutter is moving. For this MTI system to work, not only is a moving target needed, but also clutter.

c. Radar application. How does this effect work in radar? If there are two or more targets at approximately equal azimuth in range, the radar receiver cannot discriminate between the two signals as separate targets. To the receiver, the returned signal would appear as the echo from a single target and have an amplitude (intensity) equal to the vector sum of the amplitude of the echoes from each of the individual targets. The amplitude of the vector sum depends upon the phase relationship of the received echoes. The phase relationship, in turn, is determined by the round-trip path length between the antenna and the radar reflecting surface. If this path-length difference remains constant, the amplitude detected by the radar receiver remains constant. If one of the radar reflecting surfaces is moving, then the path-length difference is constantly changing and each pulse echo detected by the receiver will have a different amplitude. This is important. If two successive received signals from the same range and azimuth are compared, it can be determined whether they are of equal amplitude. If they are, it is recognized that the source of these echoes is clutter, and the signals are rejected. On the other hand, if the amplitude of the signals is not constant, it is recognized that the echoes originate from a combination of several reflecting surfaces, one of which is moving. These signals are not rejected but are applied to the PPI.

d. Effect of target speed. How fast must the target move before its movement can be detected? Since it is detected by means of an interference effect, the minimum discernible movement of the target in the clutter is derived in terms of wavelengths. Its exact value depends upon the amplitude of reflected signals from both target and clutter. However, a typical minimum value would be a pulse-to-pulse change of one-tenth wavelength in round-trip path length. At the S-band frequencies used in the acquisition radar, this corresponds to a radial target velocity of only 10 mph. Target speed therefore, is no problem in the design of a moving target indicator for antiaircraft radars. The problem is how to match accurately two successive echoes from the same area to determine whether or not they are of equal amplitude. The radar information is divided into two parts. One part is sent through a delay channel, the other part is sent through nondelay channel. The delay channel stores this information for a period of time precisely equal to the time interval between successive transmitted pulses from the radar. The delay channel then reproduces these pulses with very nearly identical waveshape and amplitude, but of opposite polarity, to the output of the nondelay channel. These two outputs are then added together, the algebraic sum is amplified, and the negative portions inverted. If, when the outputs of the delay and nondelay channels are combined, the two signals are equal and opposite, the algebraic sum is zero. If the amplitudes are not equal, the algebraic sum will equal the difference between the amplutudes of two successive returns from the same target range. This difference is known as the residue. Ideally the residues from fixed targets and from nonfading targets in the clear would be zero and these returns would not appear on the PPI. The residues from targets in clutter would not equal zero. The residue is amplified and applied to the PPI to indicate a target echo.

69. LIMITATIONS IN THE SYSTEM

a. Circuit limitations. In any realizable system there are never ideal conditions. The residue from fixed targets is small, but not zero. For detection of moving targets, the residue from moving targets must then be larger than the residue from fixed targets or from system noise (noise is random and never cancels). In order to evaluate the effectiveness of MTI performance, a figure of merit known as the cancellation ratio is often used. Cancellation ratio is defined as the ratio of the amplitude of a fixed target echo (with the nondelay channel disconnected to prevent mixing with the delay channel output) to the amplitude of the residue from the fixed target echo with the outputs of the delay and nondelay channels mixed and algebraically summed. In other words, it is the factor by which fixed targets are suppressed by the MTI system. The cancellation ratio is expressed in decibels (db). This ratio is defined by:

$$\text{cancellation ratio in db} = 20 \log 10 \frac{\text{amplitude of uncanceled pulse in volts}}{\text{amplitude of canceled residue in volts}}.$$

To simplify the testing procedure, a constant-amplitude test pulse is provided in the system to simulate a target echo. This test pulse permits cancellation ratio measurement without the use of actual targets.

b. Antenna limitations. The discussion here will consider only a few of the more important limitations to achieving a high cancellation ratio. The principal limitation is not a function of the MTI circuitry, but a basic characteristic of scanning antennas. Antenna scan inherently limits the cancellation ratio. This is due to the variation in gain across the nose of the antenna's beam. As the beam sweeps across the target, the gain changes slightly between each two successive transmitted pulses. The pulse-to-pulse change in gain causes a difference in received echo amplitude and a cancellation residue proportional to this gain change. The amount of this residue depends upon the pulse repetition rate, the antenna beam width, and the rotational speed of the antenna. For the acquisition system, an antenna rotational rate of 10 rpm limits the over-all cancellation ratio to 23 decibels; at 20 rpm effective cancellation decreases to 17 decibels; and at 30 rpm antenna scan so limits cancellation ratio that MTI is of negligible value and should not be used. The highest obtainable cancellation ratio is therefore 23 decibels. The remaining parts of the MTI apparatus is to be able to provide a cancellation ratio sufficiently better than the limitation imposed by the antenna scan, so that the antenna, rather than the electronic circuitry, is the limiting factor.

70. BLOCK DIAGRAM DISCUSSION (TM 9-5000-26, page 207)

a. MTI simplified block. The MTI system works on a delay principle. Received video is compared in successive periods, using a 15-megacycle carrier modulated with one of the outputs of the i-f amplifier channel in the MTI modulator channel on a 15-mc carrier. The carrier is necessary because the quartz delay medium in the MTI delay channel would not reproduce video pulses correctly. This single frequency is modulated with the video, a preknock pulse, and a test pulse when needed. The modulated output of this modulator channel is then sent to a delay channel and a nondelay channel. The delay channel retards the carrier containing preknock and video for one pulse repetition period or 1,000 microseconds. The nondelay channel however, passes the signals undelayed so that with a reversal of polarity, the nondelayed and the delayed video can now be compared or added in the MTI video channel. Fixed echoes now cancel out because there is no change between each fixed echo while moving targets are uncanceled. A residue video (moving target) is passed through the MTI video channel to the switcher mixer channel to be displayed on the indicators if desired. Another output of the delay channel is the auto sync pulse. This pulse is simply the preknock pulse which has been delayed 1,000 microseconds and which will be sent through the auto sync channel and used to retrigger the synchronizer and cause it to operate in a synchronous manner.

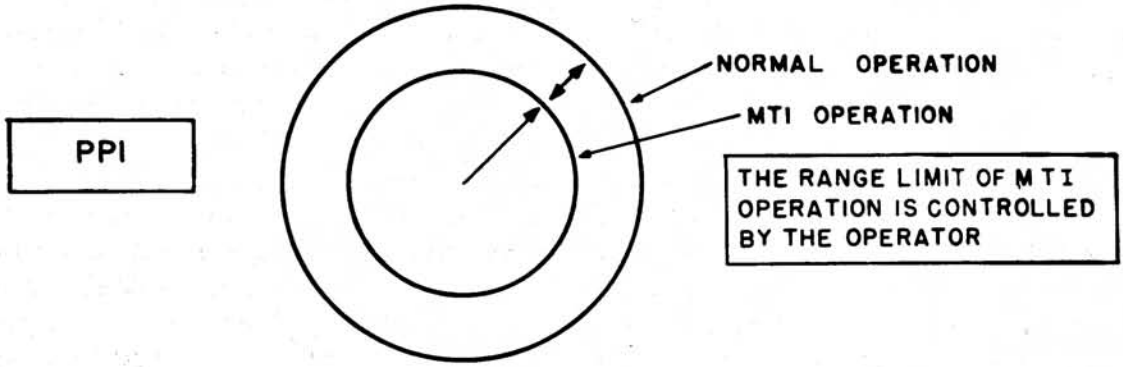

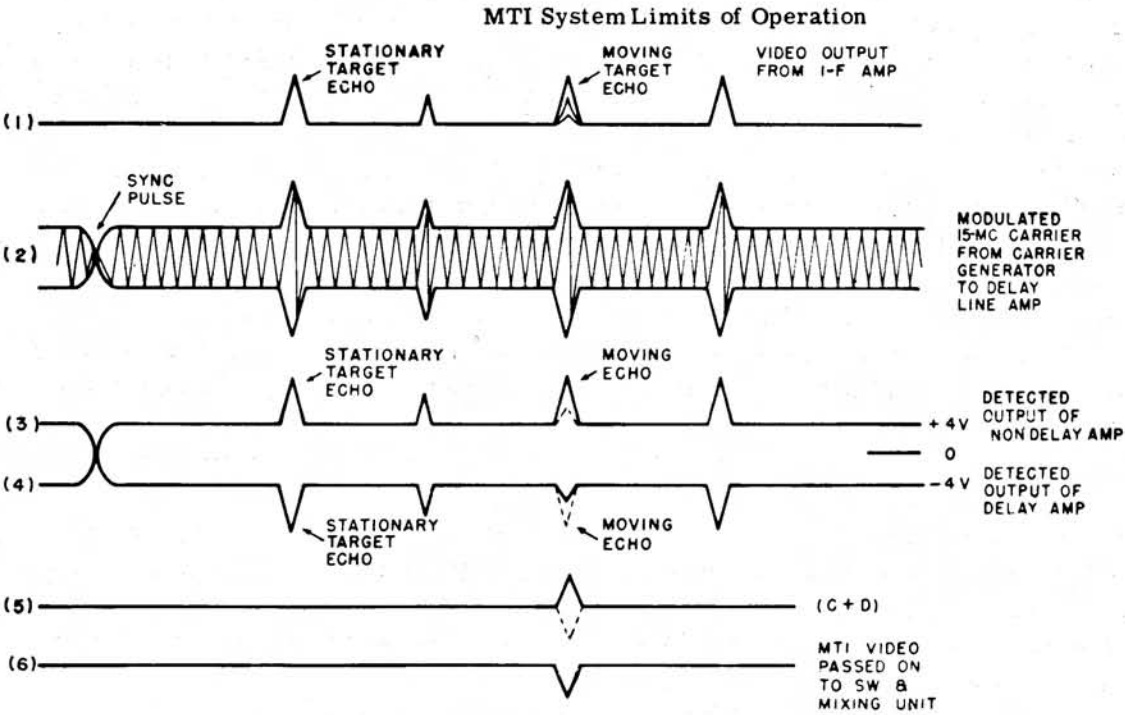

Figure 28. MTI waveforms.

b. MTI system detailed block diagram. The positive video output from the i-f amplifier (fig 28(1)) channel is used to modulate a 15-mc carrier generated by oscillator V2 in the MTI modulator channel. In addition, a positive preknock pulse from the synchronizer is amplified and inverted in the inverter amplifier V1 of the MTI modulator channel and applied to the 15-mc carrier in modulator V3 (MTI modulator channel). The use to which the preknock is put will be discussed later. The modulated carrier is amplified in the r-f amplifier V4 and amplifier V1 (MTI modulator channel) and applied to the MTI delay channel (fig 28(2)) and the MTI nondelay channel. In the MTI delay channel, electrical energy is converted to sonic energy in the delay cell and the modulated 15-mc